July 8, 1958 P. B. ONCLEY 2,842,021

ELECTRONIC MUSICAL INSTRUMENT

Filed May 17, 1955 2 Sheets-Sheet 1

Fig. 1.

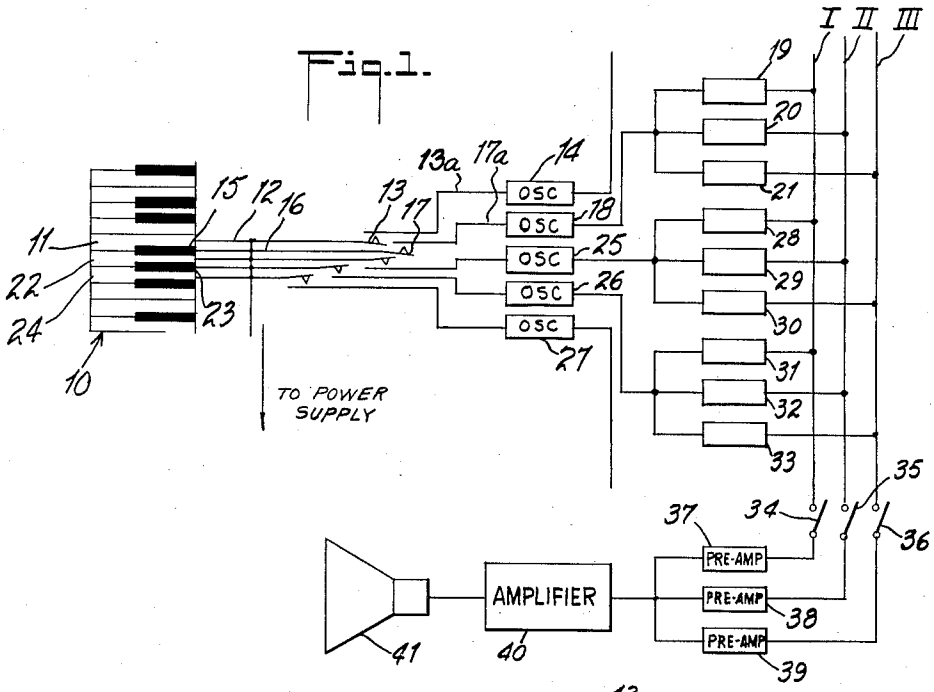

Fig. 2.

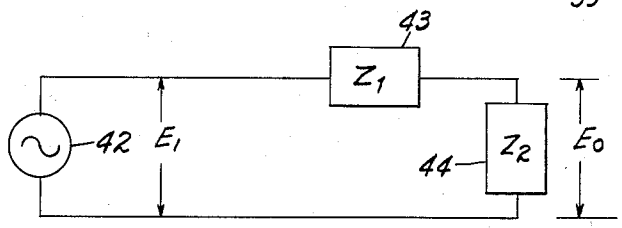

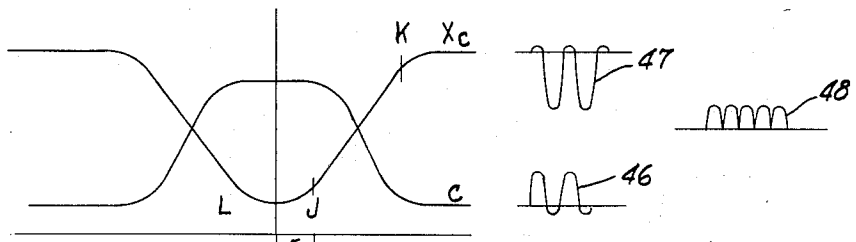

Fig. 3.

INVENTOR.
PAUL B. ONCLEY

BY

Cyrus D. Samuelson

ATTORNEY

July 8, 1958 P. B. ONCLEY 2,842,021

ELECTRONIC MUSICAL INSTRUMENT

Filed May 17, 1955 2 Sheets-Sheet 2

Fig. 4.

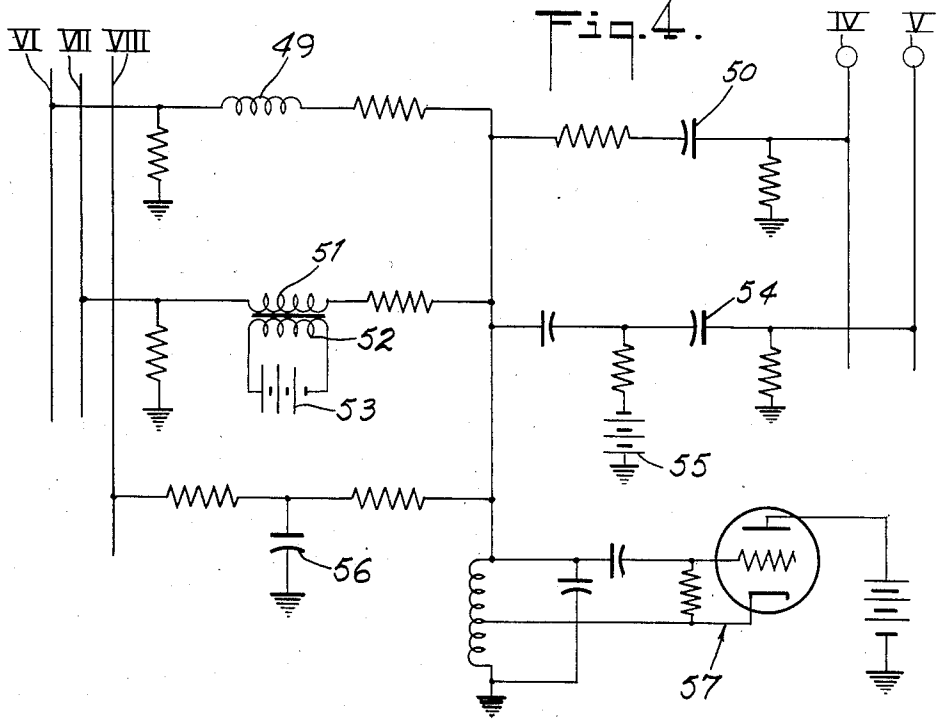

Fig. 5.

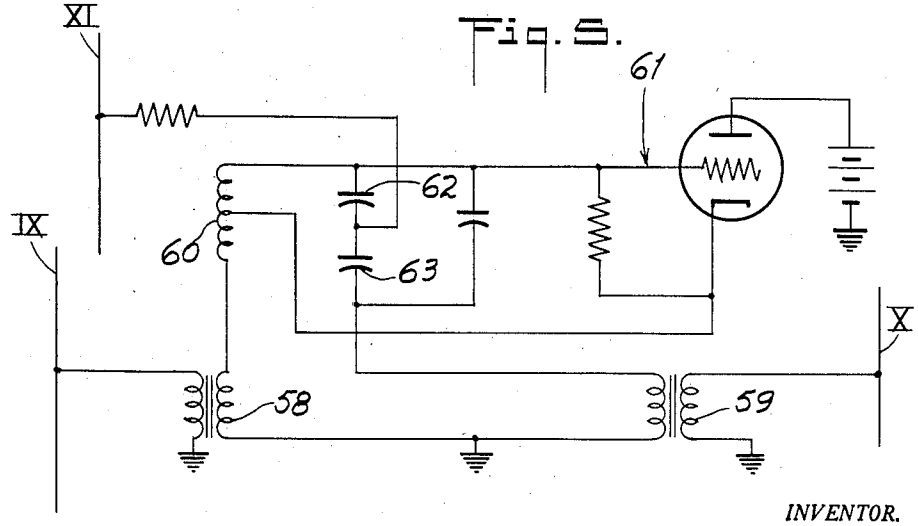

INVENTOR.
PAUL B. ONCLEY

BY Cyrus D. Samuelson
ATTORNEY

United States Patent Office

2,842,021

Patented July 8, 1958

2,842,021

ELECTRONIC MUSICAL INSTRUMENT

Paul B. Oncley, Princeton, N. J., assignor to Gulton Industries, Inc., Metuchen, N. J., a corporation of New Jersey

Application May 17, 1955, Serial No. 508,936

4 Claims. (Cl. 84—1.01)

My invention relates to electronic musical instruments and in particular to the production of musical tones by simple and economical means.

A commonly used type of electronic musical instrument employs a large number of conventional sinusoidal oscillators to produce the basic tones. The individual oscillators have their outputs modified by a plurality of distorting or similar type circuits, it being necessary to have several of these tone shaping circuits associated with each individual oscillator of the musical instrument. Because of the large number of oscillators in even a moderate-sized organ, such a system of tone shaping is only economical and practical if the circuitry and design of the tone shaping elements are simple and economical.

It is, accordingly, a principal object of my invention to provide an economical and simple method and devices for tone shaping the sinusoidal oscillators of an electronic musical instrument.

It is a further object of my invention to provide simple non-linear tone shaping circuits for use in modifying the output of individual sinusoidal oscillators of an electronic musical instrument.

Other objects and advantages of my invention will be apparent during the course of the following description.

In the accompanying drawings, forming a part of this application, and in which like numerals are employed to designate like parts throughout the same,

Figure 1 is a block diagram of a portion of an electronic organ of the type mentioned above,

Figure 2 is a simplified block diagram which is utilized to illustrate and explain the underlying principle of my invention,

Figure 3 is a plot of capacitance and capacitive reactance against voltage for non-linear capacitors and serves to further illustrate the underlying operation of my invention,

Figure 4 is a schematic diagram of several embodiments of my invention, and

Figure 5 is a schematic of several further embodiments of my invention.

In the drawings, wherein for the purpose of illustration, are shown preferred embodiments of my invention, the numeral **10** designates an electronic organ console, generally, a small portion of which I have chosen to illustrate my invention. It should be clearly understood that my invention may be applied to all of the organ or to any part of it to which it is desirable to add tone shaping. It is also to be understood that the methods and devices of my invention, which are described for use with an electronic organ, are equally applicable to other electronic musical instruments such as electric pianos, accordions, and like instruments.

The position of the keyboard chosen to illustrate my invention comprises the key F, numeral **11**, and the five half-tones immediately above **11** in frequency through to key A, numeral **24**. The other keys are designated as follows: F#, **15**; G, **22**; and G#, **23**. All keys operate

in the same general manner so that it is sufficient to describe the operation of key **15** and its associated circuitry to adequately explain the principles and technique employed in my invention. When key **15** is depressed, power is connected to oscillator **18** by the closing of the contact **17** which connects bus **16** and bus **17***a*. The output of oscillator **18** is fed to the input of each of the tone shaping elements **19**, **20** and **21** whose characteristics may be fixed or variable depending upon the particular design of the electronic musical instrument in which they are installed. The output of tone shaping element **19** is fed to bus I, the output of tone shaping element **20** is fed to bus II and the output of tone shaping element **21** is fed to bus III.

The output of bus I is fed to preliminary amplifier **37** through switch **34**, the output of bus II is fed to preliminary amplifier **38** through switch **35**, and the output of bus III is fed to preliminary amplifier **39** through switch **36**. The outputs of the preliminary amplifiers **37**, **38** and **39** are fed to amplifier **40** whose output is connected to loudspeaker **41**. Switches **34**, **35** and **36** are commonly referred to as stops and serve for example to make all keys string, flute, diapason, or any of the other usual organ stop effects or combination of effects depending on the tone shaping provided by the particular tone shaping elements.

My invention relates to economical and easily produced tone shaping elements which may be employed in conjunction with each individual key of an electronic organ manual, or other electronic musical instrument. Oscillator **25** which is actuated by key **22** feeds tone shaping elements **28**, **29** and **30** in the same manner as has been previously described. In like manner, oscillator **26** feeds tone shaping elements **31**, **32** and **33**. Oscillators **14** and **27** also feed similar tone shaping elements which are not shown in the drawing. Key **11** actuates oscillator **14** by connecting bus **12** to bus **13***a* through contact **13**. All other keys actuate their associated oscillators in a similar manner. However, other methods for actuating the individual tone oscillators may also be employed. Tone shaping elements **28** and **31** are connected to bus I, tone shaping elements **29** and **32** are connected to bus II and tone shaping elements **30** and **33** are connected to bus III.

Figures 2 and 3 serve to illustrate the operation of the tone shaping elements produced in accordance with my invention. The numeral **42** designates a source of alternating voltage and may represent any of the sinusoidal oscillators of an electronic musical instrument. The output voltage of **42** is designated as E_1 and the voltage across **44**, impedance Z_2, is designated as E_0. Impedance Z_1 which is in series with **42** and **44** is designated by the numeral **43**. Either **44** or **43**, or both of them, may be non-linear impedances.

In Figure 2,

$$E_0=\frac{E_1Z_2}{Z_1+Z_2}$$

so that if both Z_1 and Z_2 vary in accordance with the value of the input voltage E_1, E_0 will not bear a linear relationship to E_1. This will also hold true if either Z_1 or Z_2 is non-linear and varies in accordance with the value of the input voltage E_1. Assume that Z_2 is a non-linear capacitor whose capacity varies in accordance with the applied voltage as illustrated by curve C of Figure 3. Then its capacitive reactance varies in accordance with the applied voltage as illustrated by curve X_C of Figure 3. If the impedance of Z_1 is substantially higher than that of Z_2, E_0 will be approximately proportional to E_1Z_2. And since Z_2 is equal to X_C in this case, then E_0 is approximately equal to E_1X_C. If a sinusoidal voltage is applied as E_1 in addition to a biasing direct-

current voltage E_b, curve 45, so that operation of the circuit is at point J on curve X_C, the resulting curve, which represents E_0, will be of the form of curve 46. In a similar manner, curve 47 represents operation at point K of the curve. Frequency doubling and half-wave rectification occurs when operation takes place at point L of the curve. Curve 48 illustrates the resultant wave shape for such operation. This operation at point L is possible because the ferroelectrics such as barium titanate are not polarity sensitive.

A similar analysis may be carried out for non-linear element 43, in which case, a maximum change in the wave shape of E_0 with respect to that of E_1 will occur when the impedance of 44 is considerably lower than that of 43.

Coils wound on cores made of any of the ferromagnetic ceramics exhibit an effect similar to that described above except that the inductive reactance rather than the capacitive reactance varies with the applied current. Similar analysis to that given will hold equally well in such cases in which either 43 or 44 is a non-linear inductance. More complex wave shapes are obtained when both 43 and 44 are impedances which are functions of applied voltage and current and when either or both of them are combinations of linear and non-linear capacitors and inductors, used with or without other linear or non-linear circuit elements. Non-linear transformers, whose mutual inductance is dependent on the applied current, may also be employed as the non-linear circuit elements.

Figure 4 illustrates several non-linear tone shaping circuits at the output of oscillator **57** and feeding various output buses. Non-linear capacitor **50** feeds bus IV and is operated as an unbiased element in the position of **43** of Figure 2. Bus V is fed by non-linear capacitor **54** in the position of 43 of Figure 2 with the addition of D.-C. bias supplied by battery **55**. Bus VI is fed by unbiased non-linear inductor **49** in the position of 43 of Figure 2. Bus VII is fed by non-linear inductor **51** in the position of 43 of Figure 2. The operating point is biased by the application of a D.-C. bias from the battery **53** through secondary winding **52**. Bias of non-linear inductors may also be accomplished by applying a permanent magnetic field to the inductor. Non-linear capacitor **56** feeds bus VIII and is in the position of 44 in Figure 2. It is operated without bias. Other arrangements and configurations may be utilized to produce the various effects desired.

Figure 5 illustrates still further embodiments of my invention. Bus IX is fed from a small transformer **58** which is biased by the vacuum cathode current and whose mutual inductance is non-linear. A miniature toroidal core of ferromagnetic ceramic material may be employed to produce transformers with non-linear mutual inductance. Non-linear transformer **59** supplies bus X and is unbiased. The inductance of **58** and **59** is small with respect to main tuning inductance **60** so that the fundamental frequency of the oscillator **61** is not materially affected. Bus XI is fed from the junction of capacitors **62** and **63** either or both of which may be linear or non-linear depending on the type of effect desired.

While I have described my invention by means of specific examples and in specific embodiments, I do not wish to be limited thereto, for obvious modifications will occur to those skilled in the art without departing from the spirit of my invention or the scope of the subjoined claims.

Having thus described my invention, I claim:

1. An electronic musical instrument comprising in combination a plurality of oscillators, each characterized by a substantially sinusoidal output current, individual shaping circuits respectively interposed in the output paths of said oscillators, each of said shaping circuits including at least one reactance element comprising a material selected from the group consisting of ferroelectric and ferromagnetic materials.

2. An electronic musical instrument as described in claim 1 wherein at least one of said reactance elements is capacitive.

3. An electronic musical instrument as described in claim 1 wherein at least one of said reactance elements is inductive.

4. An electronic musical instrument as described in claim 1 wherein at least one of said reactance elements is capacitive and at least one is inductive.

References Cited in the file of this patent

UNITED STATES PATENTS

2,142,580	Williams	Jan. 3, 1939
2,182,377	Guanella	Dec. 5, 1939
2,289,564	Wrathall	July 14, 1942
2,403,664	Langer	July 9, 1946
2,462,423	Polydorff	Feb. 22, 1949
2,649,006	Heytow et al.	Aug. 18, 1953