(12) INTERNATIONAL APPLICATION PUBLISHED UNDER THE PATENT COOPERATION TREATY (PCT)

(19) World Intellectual Property Organization
International Bureau

(43) International Publication Date
5 February 2004 (05.02.2004)

PCT

(10) International Publication Number
WO 2004/011907 A3

(51) International Patent Classification[7]: G01N 21/55

(21) International Application Number: PCT/US2003/023537

(22) International Filing Date: 25 July 2003 (25.07.2003)

(25) Filing Language: English

(26) Publication Language: English

(30) Priority Data:
10/206,886 26 July 2002 (26.07.2002) US

(71) Applicant: **PROTERION CORPORATION** [US/US]; 1 Possumtown Road, Piscataway, NJ 08854 (US).

(72) Inventors: **ANAFI, David**; 3543 Moon Bay Circle, Wellington, FL 33414 (US). **RAMSAY, Glen**; 1500 August Drive, Lakewood, NJ 08701 (US). **MACDONALD, Jeff**; 108 Greenwood Lake Road, Little Egg Harbor, NJ 08087-3704 (US). **HALATIN, Peter**; 58 Smith Street, Howell, NJ 07731 (US). **SCHWARTZ, Charlie**; 132 Silverbay Road, Toms River, NJ 08753 (US).

(74) Agents: **MCHUGH, Steven, M.** et al.; Brown Rudnick Berlack Israels LLP, One Financial Center, Boston, MA 02111 (US).

(81) Designated States *(national)*: AE, AG, AL, AM, AT, AU, AZ, BA, BB, BG, BR, BY, BZ, CA, CH, CN, CO, CR, CU, CZ, DE, DK, DM, DZ, EC, EE, ES, FI, GB, GD, GE, GH, GM, HR, HU, ID, IL, IN, IS, JP, KE, KG, KP, KR, KZ, LC, LK, LR, LS, LT, LU, LV, MA, MD, MG, MK, MN, MW, MX, MZ, NI, NO, NZ, OM, PG, PH, PL, PT, RO, RU, SC, SD, SE, SG, SK, SL, SY, TJ, TM, TN, TR, TT, TZ, UA, UG, UZ, VC, VN, YU, ZA, ZM, ZW.

(84) Designated States *(regional)*: ARIPO patent (GH, GM, KE, LS, MW, MZ, SD, SL, SZ, TZ, UG, ZM, ZW), Eurasian patent (AM, AZ, BY, KG, KZ, MD, RU, TJ, TM), European patent (AT, BE, BG, CH, CY, CZ, DE, DK, EE, ES, FI, FR, GB, GR, HU, IE, IT, LU, MC, NL, PT, RO, SE, SI, SK, TR), OAPI patent (BF, BJ, CF, CG, CI, CM, GA, GN, GQ, GW, ML, MR, NE, SN, TD, TG).

Published:
— *with international search report*

[Continued on next page]

(54) Title: BEAM SHIFTING SURFACE PLASMON RESONANCE SYSTEM AND METHOD

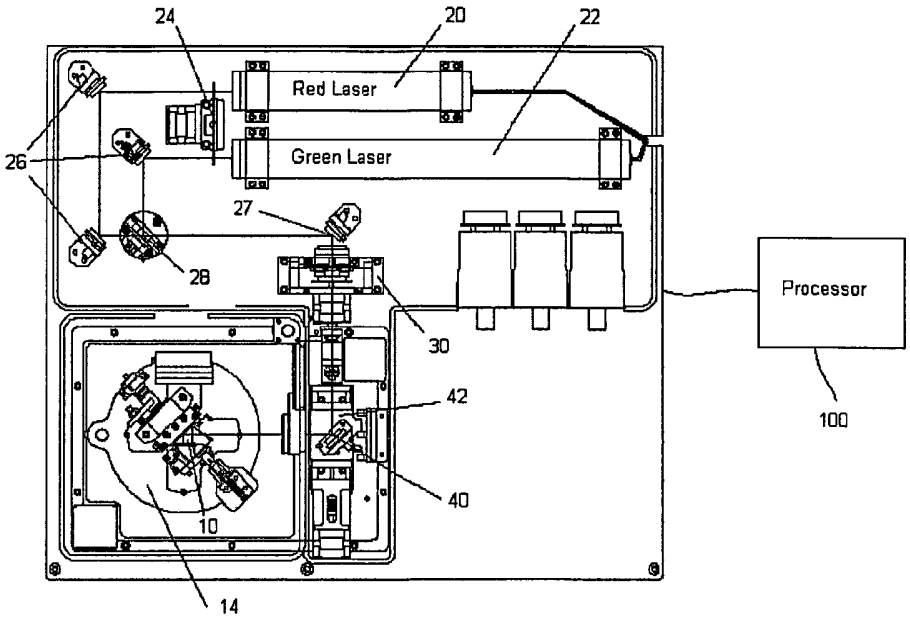

(57) Abstract: The invention relates to a surface plasmon resonance system (100) method. The system (100) has at least one light source operable to generate a source beam, a prism having a rear surface at least partially coated with a metallic coating and optionally a dielectric layer. At least one layer under test is positioned on the rear surface of the prism. The source beam is directed at the layer under test thereby defining an angle between the source beam and the rear surface of the prism. A detector is operable to detect light that is reflected or scattered by the layer under test. The source beam is directed towards the layer under test at a selected angle.

WO 2004/011907 A3

— *before the expiration of the time limit for amending the claims and to be republished in the event of receipt of amendments*

(88) Date of publication of the international search report:
27 May 2004

For two-letter codes and other abbreviations, refer to the "Guidance Notes on Codes and Abbreviations" appearing at the beginning of each regular issue of the PCT Gazette.

INTERNATIONAL SEARCH REPORT

International application No.
PCT/US03/23537

A. CLASSIFICATION OF SUBJECT MATTER

IPC(7) : G01N 21/55
US CL : 356/445

According to International Patent Classification (IPC) or to both national classification and IPC

B. FIELDS SEARCHED

Minimum documentation searched (classification system followed by classification symbols)
U.S. : Please See Continuation Sheet

Documentation searched other than minimum documentation to the extent that such documents are included in the fields searched

Electronic data base consulted during the international search (name of data base and, where practicable, search terms used)

C. DOCUMENTS CONSIDERED TO BE RELEVANT

Category *	Citation of document, with indication, where appropriate, of the relevant passages	Relevant to claim No.
Y	US 5,322,798 A (SADOWSKI) 21 June 1994, col. 1, lines 15-20; Fig. 5 col. 2, lines 39-40	1, 3-14, 16-26
Y	US 5,923,031 A (NAYA) 13 July 1999, Fig. 5, Fig. 10	1, 3-14, 16-26

☐ Further documents are listed in the continuation of Box C. ☐ See patent family annex.

* Special categories of cited documents:

"A" document defining the general state of the art which is not considered to be of particular relevance

"E" earlier application or patent published on or after the international filing date

"L" document which may throw doubts on priority claim(s) or which is cited to establish the publication date of another citation or other special reason (as specified)

"O" document referring to an oral disclosure, use, exhibition or other means

"P" document published prior to the international filing date but later than the priority date claimed

"T" later document published after the international filing date or priority date and not in conflict with the application but cited to understand the principle or theory underlying the invention

"X" document of particular relevance; the claimed invention cannot be considered novel or cannot be considered to involve an inventive step when the document is taken alone

"Y" document of particular relevance; the claimed invention cannot be considered to involve an inventive step when the document is combined with one or more other such documents, such combination being obvious to a person skilled in the art

"&" document member of the same patent family

Date of the actual completion of the international search
16 September 2003 (16.09.2003)

Date of mailing of the international search report
29 MAR 2004

Name and mailing address of the ISA/US
Mail Stop PCT, Attn: ISA/US
Commissioner for Patents
P.O. Box 1450
Alexandria, Virginia 22313-1450
Facsimile No. (703)305-3230

Authorized officer
FRANK G FONT
Telephone No. (703) 308-0956

Form PCT/ISA/210 (second sheet) (July 1998)

Continuation of B. FIELDS SEARCHED Item 1:
356/445; 365/445, 446, 317, 318, 345; 422/82.05, 82.11, 82.09, 68.1, 88, 61, 83, 89; 436/139-142, 144, 164, 165, 170, 171, 113, 121, 131; 250/227.14, 227.25, 216