Aug. 22, 1950 E. BRUEGGER 2,519,820

METHOD OF MAKING CONDENSER TUBES

Filed Jan. 7, 1946 2 Sheets-Sheet 1

Fig. 1,

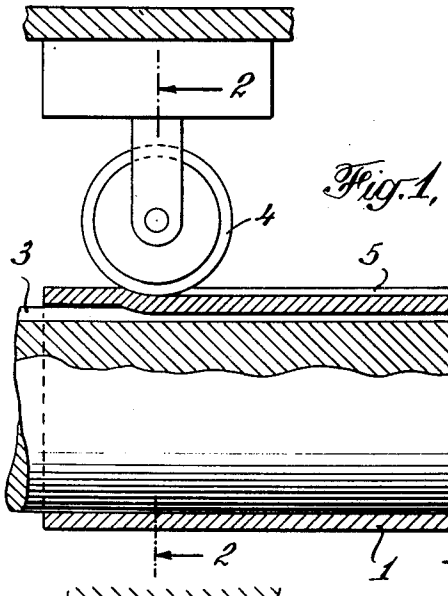

Fig. 3,

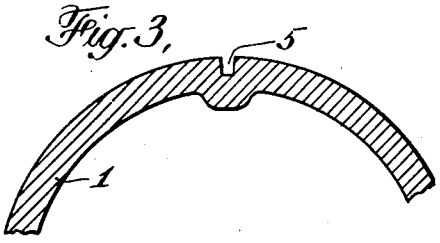

Fig. 2,

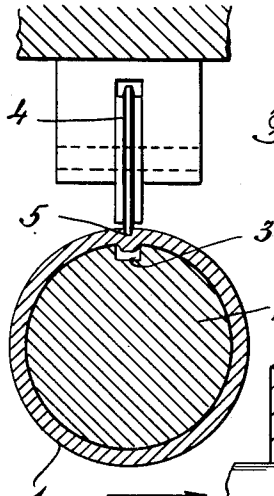

Fig. 4,

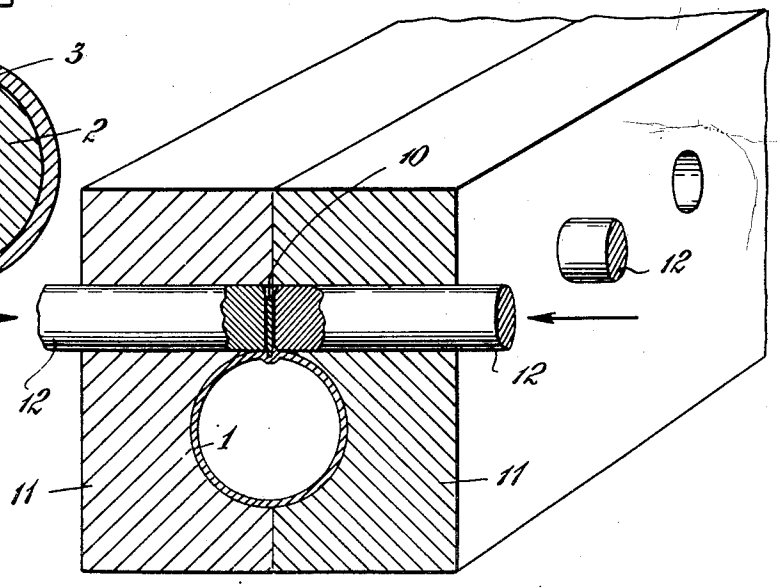

INVENTOR
ERNEST BRUEGGER
BY
Pennie Edmonds Morton Taylor & Adams
ATTORNEYS

Aug. 22, 1950 E. BRUEGGER 2,519,820

METHOD OF MAKING CONDENSER TUBES

Filed Jan. 7, 1946 2 Sheets-Sheet 2

Fig. 5,

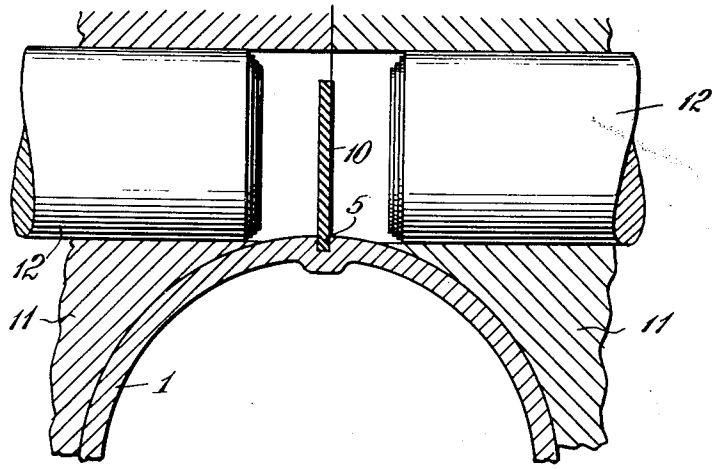

Fig. 6,

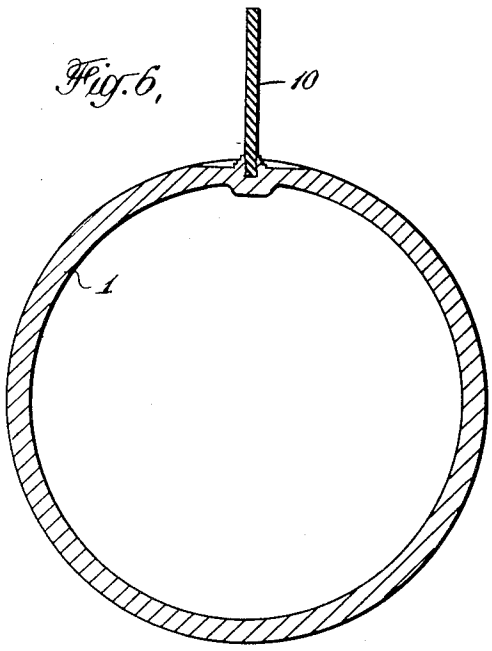

Fig. 7,

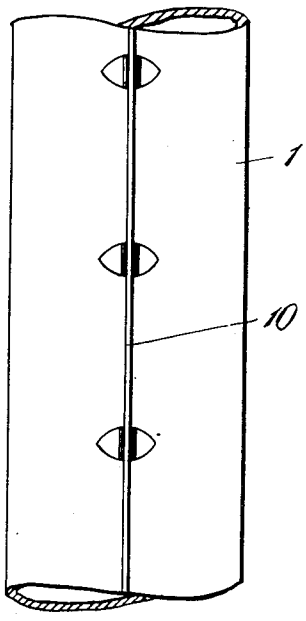

Fig. 8.

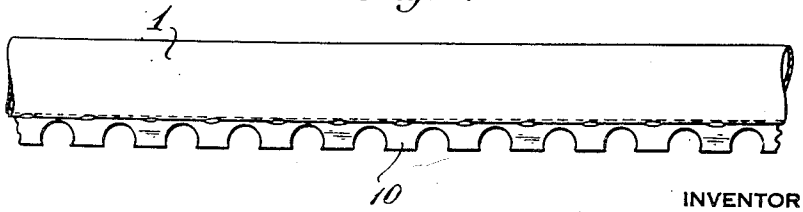

INVENTOR
ERNEST BRUEGGER
BY
Pennie Edmonds Morton & Barrow
ATTORNEYS

Patented Aug. 22, 1950 2,519,820

UNITED STATES PATENT OFFICE

2,519,820

METHOD OF MAKING CONDENSER TUBES

Ernest Bruegger, Massillon, Ohio, assignor to The Griscom-Russell Company, New York, N. Y., a corporation of Delaware

Application January 7, 1946, Serial No. 639,666

2 Claims. (Cl. 29—157.3)

1

This invention relates to improvements in methods of making condenser tubes having a drip-directing fin extending longitudinally throughout the major length of the tube. Condenser tubes with drip fins of this character have certain advantages over ordinary tubes without fins but have not come into general use for the reason that heretofore the additional cost of such tubes has offset the advantages to be derived from their use.

The principal object of the present invention is to provide a method of making such a tube which is easily carried out at low cost and which produces a condenser tube of the above type wherein the fin is firmly anchored in place with little or no weakening of the tube structure.

A further object of the invention is to provide a method of making tubes of this character wherein the fin terminates just short of the tube at both ends so that the ends of the tubes are left round to permit the tube to be expanded in the tube sheet of the condenser in the usual manner.

In the accompanying drawings I have illustrated the sequence of steps constituting the preferred procedure for carrying my invention into effect, and in the said drawings

Fig. 1 is a longitudinal section showing the grooving operation which is the first step of my improved method;

Fig. 2 is a sectional view on line 2—2 of Fig. 1;

Fig. 3 is an enlarged transverse section of the tube wall showing the shape of the tube in cross section after the grooving operation;

Fig. 4 is a perspective view partly in section showing the procedure for carrying out the second step in the manufacture of the tube;

Fig. 5 is an enlarged sectional view showing in greater detail the operation of the crimping members;

Fig. 6 is an enlarged cross section of the tube showing in detail the connection formed by the crimping operation;

Fig. 7 is an inverted plan view of a section of the tube; and

Fig. 8 shows in side elevation an intermediate length of the finished tube.

Referring to the drawings, 1 indicates a length of tubing to which the fin is to be attached. In the first step of my process a section of this tubing 1 of the desired length is mounted on a mandrel 2 which has a longitudinal groove 3 on its upper side extending the full length of the mandrel. The mandrel 2 with the tube section

2

mounted thereon is moved under a grooving roll 4 which presses into the upper wall of the tube of a longitudinal groove 5 of the cross section indicated in Fig. 3. The groove 5 does not run the full length of the tube section. Instead at each end there is an ungrooved portion 6 of the original circular cross section, which is of sufficient length to be expanded in the tube sheet when the condenser is assembled. The groove 3 extends longitudinally throughout the length of the mandrel so that the tube 1 may be readily withdrawn from the mandrel.

After the tube is removed from the mandrel a strip 10 of fin material of the proper length is inserted edgewise in the groove 3 and the tube with the assembled fin is placed between two clamping blocks 11 (see Fig. 4) whereby the tube 1 and the attached section of the fin are held firmly in place. The clamping blocks 11 are coextensive in length with the fin section 10 and throughout the length of the clamping blocks transversely reciprocating plungers 12 are supported at spaced intervals. The plungers 12 are placed opposite each other and after the tube is assembled with its finned section in the groove 3 the plungers 12 throughout the length of the blocks 11 are forced together, thereby crimping the metal of the tube at intervals against the base of the fin, as shown in Fig. 6. After the crimping operation the blocks 11 are separated and the finished tube section removed.

The crimping plungers 12 are preferably arranged opposite to each other and are operated in unison so that each acts to resist the pressure of the other. By shaping the ends of the plungers 12 as shown the metal of the tube is forced inwardly and downwardly against the fin, thereby compressing the metal of the fin from opposite sides, as shown in Fig. 6.

The drip fin may be of uniform width throughout but is preferably serrated along its lower edge as indicated to provide spaced points from which the condensate drips uniformly through the length of the tube. With a fin of this type the crimping plungers are arranged at spaced intervals corresponding with the full width portions of the fin between the serrations so as to provide flow paths from the tube surface to each section of the fin.

It will of course be understood that the successive operations may be carried out with apparatus other than that shown and described. For example, the groove may be pressed into the tube by means of a die of suitable configuration. Also the crimping of the tube to hold the rib

in place may be accomplished by feeding the tube longitudinally through a single pair of intermittently acting crimpers to crimp the rib in place at successive intervals. Various other changes in the apparatus for carrying the process into effect may obviously be made.

It will also be understood that the invention is not limited to the precise operations herein shown and described but that such operations may be variously modified within the scope of the appended claims.

I claim:

1. The method of making condenser tubes which consists in forming a longitudinal groove in the side wall of the tube, placing a fin in said groove and simultaneously upsetting the opposite side walls of the groove at spaced intervals to hold said fin in place.

2. The method of making condenser tubes which consists in placing a tube of the desired length on a mandrel having a longitudinal groove extending from end to end, pressing the side wall of said tube into said groove to form a

groove in the outer wall of said tube and a rib along the inner wall of said tube, the groove and rib being of less length than the tube and terminating short of each end thereof, placing a fin in said groove and simultaneously upsetting the opposite side walls of said groove at spaced intervals along the length of said fin to hold said fin in place.

ERNEST BRUEGGER.

REFERENCES CITED

The following references are of record in the file of this patent:

UNITED STATES PATENTS

Number	Name	Date
1,313,730	Pease	Aug. 19, 1919
1,498,894	Steenstrup	June 24, 1924
1,786,571	Lonsdale	Dec. 30, 1930
1,842,117	Renshaw	Jan. 19, 1932
1,921,928	Jones et al.	Aug. 8, 1933
1,928,639	Berg	Oct. 3, 1933
1,929,540	Trane	Oct. 10, 1933