United States Patent [19]

Horak

[11] **3,861,770**

[45] **Jan. 21, 1975**

[54] **LOCK ASSEMBLY AND TOOL**

[75] Inventor: **Martin S. Horak,** Morganville, N.J.

[73] Assignee: **Gamco Industries, Inc,** Roselle, N.J.

[22] Filed: **Feb. 8, 1973**

[21] Appl. No.: **330,697**

[52] **U.S. Cl.** ..... **339/37,** 339/85, 81/53 R, 81/90 R, 81/90 C

[51] **Int. Cl.** **H01r 13/54**

[58] **Field of Search** ..... 81/90 R, 90 C, 53 R, 125; 339/36, 39, 38, 85, 147

[56] **References Cited**

UNITED STATES PATENTS

2,676,506	4/1954	Schultz	81/125 X
3,351,111	11/1967	Biddle	81/125 X
3,519,979	7/1970	Bodenstein	339/85
3,573,702	4/1971	O'Keefe	339/37 X

Primary Examiner—Roy D. Frazier
Assistant Examiner—Terrell P. Lewis
Attorney, Agent, or Firm—Brumbaugh, Graves, Donohue & Raymond

[57] **ABSTRACT**

The lock assembly comprises a hollow cylinder closed at one end and open at the other end and a hollow cylindrical insert member which is inserted therein, and internally threaded. The cylinder and insert member are freely rotatable with respect to each other about their common axis. The rim of the insert member is formed with at least one torque transmitting means, such as a slot, which is designated to engage a cooperating torque applying means, such as a lug, on the tool. The tool comprises a hollow, cylindrical base portion machined to accommodate a spring-biased plunger which is slideably received within a hollow, half-cylindrical portion which projects from the base and which ends in a turned-in semicircular flange, circumferential extremities of which are formed at the radially-inner edge with at least one lug to engage the slot on the rim of the insert member of the locking assembly. By means of the tool, the lock assembly can easily be threaded onto or unthreaded from any suitably threaded thing to be capped or uncapped, such as a coaxial cable plug outlet of the type used in the cable television industry. However, without the tool, the lock assembly, when installed, cannot be removed, since the freely-rotating cylinder surrounding the insert member makes the latter inaccessible to ordinary tools.

12 Claims, 4 Drawing Figures

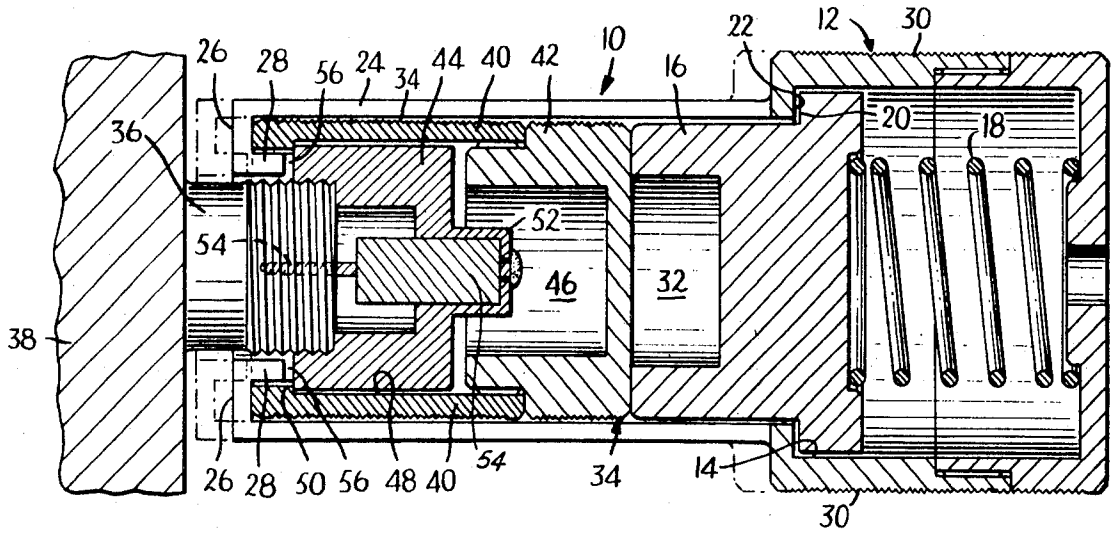

FIG. 1

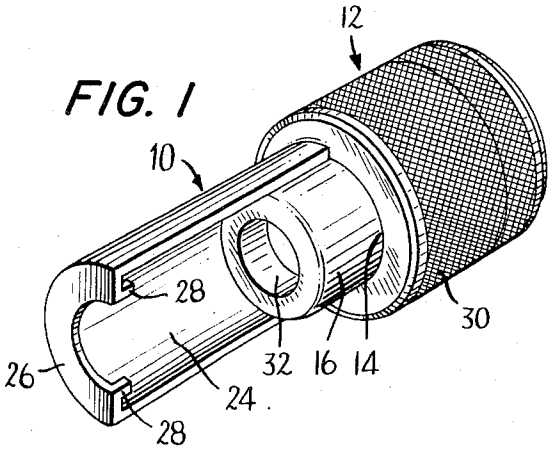

FIG. 2

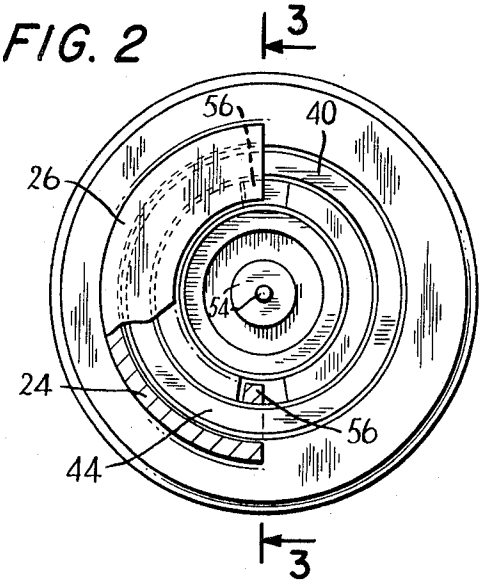

FIG. 3

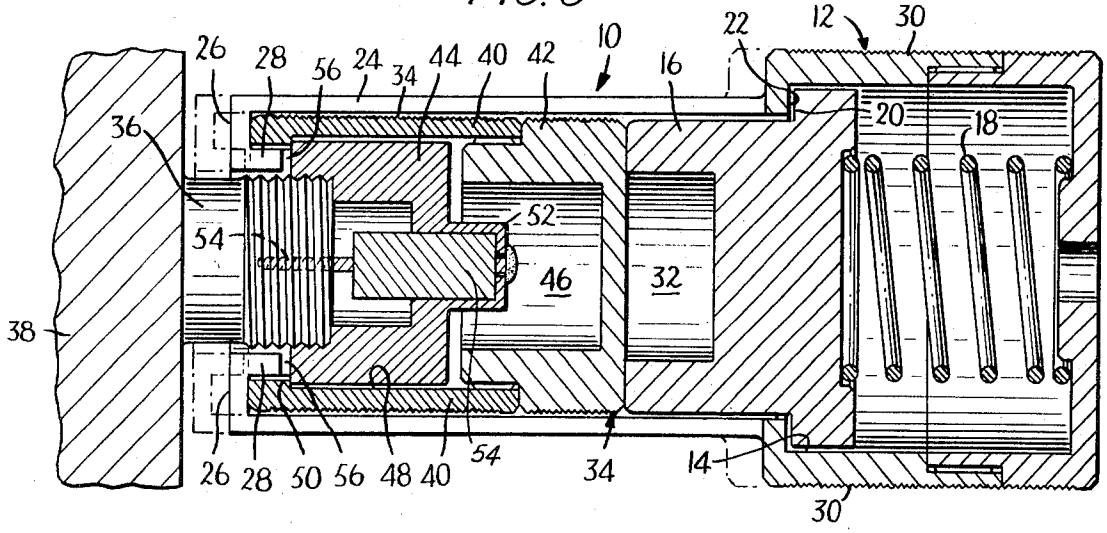

FIG. 4

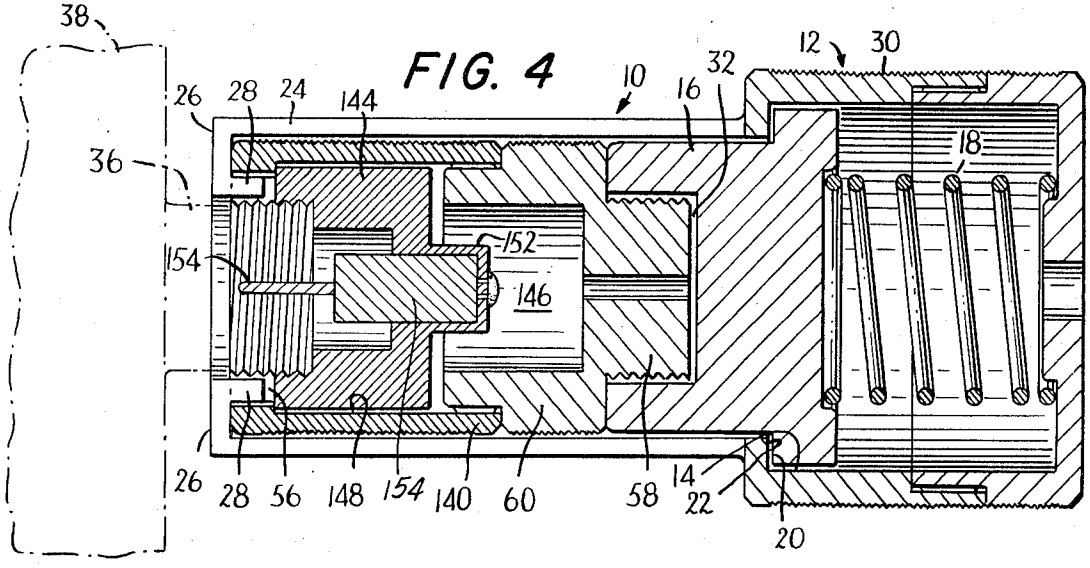

LOCK ASSEMBLY AND TOOL

BACKGROUND OF THE INVENTION

The invention relates to a lock assembly and tool and, more particularly, to a novel and highly-effective lock assembly and tool for locking coaxial cable plug outlets of the type used in the cable television industry.

The unparalleled public acceptance of cable television service in major metropolitan areas where the quality of reception is often poor, as well as in those areas of the country wherein the topography and other factors combine to produce poor television reception, has made a major industry of cable television. Not only are the subscribers to the cable services benefited by a quality television picture, unrivaled by conventional signal-receiving means, but also the subscribers are able to enjoy an ever-expanding variety of entertainment exclusively transmitted over the special cable channels.

With the tremendous growth which the cable television industry has experienced, problems have been encountered. The particular problem at which the present invention is aimed is theft of the cable services as well as abortive, attempted theft of the services, the latter generally resulting in costly damage to the cable equipment.

The relative success of those who wish to obtain the benefits of the cable service without paying has been facilitated by the fact that locking devices heretofore utilized in the industry selectively to terminate service have made visible to all who are interested the means by which the lock is operated. While many intricate tools have been developed to actuate each of various known locking devices, equally functional, home-made means are capable of being fashioned and are fashioned by the petty thief, thereby frustrating the controlled dissemination of the cable service. Unfortunately, in the case of those whose ingenuity fails them, the attempt to circumvent the lock often results in the damage of expensive cable equipment.

While theft and the abortive attempted theft of cable television services have been and continue to be the major disadvantages of the known locking devices used when cable service is discontinued, a further disadvantage of the presently used locking devices is that they expose the terminator, which is housed within the locking device, to the corrosive and fouling elements present in our atmosphere. Environmental conditions are particularly bad in the major metropolitan areas. Sometimes this results in the malfunction of the terminator and the ensuing costly repair or replacement of the terminator.

To summarize then, the major problems which exist with the cable locking devices presently employed are twofold: their construction is such that they are easily circumvented; and the terminators are exposed to corrosive environmental conditions.

SUMMARY OF THE INVENTION

An object of the invention is to remedy the problems outlined above and, in particular, to provide a lock assembly and tool, the operation of which is concealed from view, that makes it possible to lock coaxial cable plug outlets of the type used in the cable television industry in such a manner that the risk of their being damaged or unlocked by unauthorized persons is negligible. Another object of the invention is to provide a lock assembly that protects the terminator from the atmosphere.

The foregoing and other objects are attained according to the invention by the provision of means comprising two major parts: a lock assembly and a tool for actuating the lock assembly. The lock comprises a hollow cylinder closed at one end and open at the other and a hollow cylindrical insert member which is inserted therein and internally threaded to mate with the external threads of the object desired to be locked. Of course, it is also within the scope of the invention to form the external thread on the insert member and the internal thread on the object to be locked. The insert member is freely rotatable with respect to the cylinder in which it is enclosed and is formed with at lease one transverse torque transmitting means, for example a slot, on its outer rim which is designed to engage a co-operating torque applying means, for example a lug, on the tool.

The tool comprises a hollowed-out cylindrically-formed base portion designed to receive one end of a center-bored, spring-biased plunger. The other end of the plunger is slideable within the hollow, half-cylindrical portion projecting from the base and which culminates in a turned-in semicircular flange, the circumferential extremities of which are formed at the radially inner edge with at least one rearwardly-projecting torque applying lug which is designed to mate with the torque transmitting slot on the outer rim of the insert member of the locking assembly. The hollow, half-cylindrical projection is formed to accommodate the cooperating lock assembly. The spring-biased plunger provides the tension necessary to hold the lock assembly in place as it is engaged or disengaged. In its preferred field of use, the freely-rotating insert member in the lock assembly is further designed to receive a terminator for a coaxial cable.

BRIEF DESCRIPTION OF THE DRAWING

A better understanding of the invention may be gained from a consideration of the following detailed description of the preferred embodiment thereof, in conjunction with the appended figures of the drawing, wherein:

FIG. **1** is a perspective view of a preferred embodiment of the tool of the present invention;

FIG. **2** is a partly-broken-away front view of the tool of FIG. **1** with the co-operating lock assembly;

FIG. **3** is a longitudinal sectional view along the line **3—3** of FIG. **2** showing the tool and lock assembly positioned on a coaxial cable outlet plug; and

FIG. **4** is a sectional view of another embodiment of the invention showing the tool in combination with a dummy cable coupling assembly as the locking assembly.

DESCRIPTION OF THE PREFERRED EMBODIMENT

In a preferred embodiment of the lock assembly and tool as shown in FIGS. **1** and **3**, the tool **10** comprises a cylindrically formed base or handle portion **12**, having a hollowed-out portion **14** designed to receive the end of a center-bored, spring-biased plunger **16**. The compression coil spring **18** is located in the hollowed-out portion **14** of the base **12** and abuts the plunger **16** in order to provide a force on the plunger **16** towards the left of FIG. **3** when the spring **18** is compressed by

the plunger **16**. The plunger **16** is retained within the base portion **12** by the abutting of the plunger flange **20** against a co-operating shoulder **22** of the base portion **12**. The other end of the spring-biased plunger **16** is slideably received within the hollow, half-cylindrical portion **24** of the tool **10**, which projects from the base **12**. The half-cylindrical portion **24** ends in a turned-in semicircular flange **26**, the circumferential extremities of which are formed at the radially-inner edge with rearwardly projecting lugs **28**. The tool **10** further comprises a knurled exterior surface **30** on the base portion **12**, to facilitate manipulation of the tool **10**, and further comprises a bore **32** in the center of the spring biased plunger **16**. The bore **32** is not necessary for cooperation with the lock of FIG. **3** but facilitates cooperation with a coupling assembly **60** shown in FIG. **4**.

FIG. **3** shows not only the tool **10** but also a locking assembly **34**. The tool **10** and locking assembly **34** are shown in two positions, one in phantom, surrounding a coaxial cable outlet plug **36** which is attached to generally flat mounting means such as a wall plate **38**. The locking assembly **34**, as FIGS. **2** and **3** show, comprises a hollowed-out cylinder **40** which is closed at one end by means of a locking cap **42** formed with a hollow interior section **46**. The cylinder **40** and locking cap **42** are rigidly connected so as not to rotate with respect to each other. A bore **48** on the open end of the cylinder **40** is designed to receive an insert member **44**, internally threaded to mate with the external threads of the coaxial cable outlet plug **36**. The insert member **44** on the one hand and the cylinder **40** and locking cap **42** on the other are freely rotatable with respect to each other about their common axis. The insert member **44** is retained within the cylinder **40** by means of a flange **50**. The diameter of the bore **48** is greater than the outer diameter of the insert member **44** to permit free rotation of the cylinder **40** and cap **42** about the insert member **44**. The insert member **44** is formed with a rearward projection **52**, which is hollowed out to receive a 75-ohm terminator **54** for the coaxial cable when the lock assembly **34** is in place. The insert member **44** is further formed with two transverse slots **56** on its rim. The slots **56** are designed to engage the cooperating lugs **28** of tool **10** to provide the necessary torque to thread the freely-rotatable, internally-threaded insert member **44** onto the stationary and externally-threaded coaxial cable outlet plug **36**.

As FIG. **3** shows, the locking assembly **34** is positioned within the hollow, half-cylindrical portion **24** of the tool **10**, thereby depressing the plunger **16** and compressing the spring mechanism **18**. When the lugs **28** of the tool **10** engage the cooperating slots **56** on the insert member **44** of the locking assembly **34**, the rotation of the base portion **12** of tool **10** in a clockwise direction (as viewed by the operator of the tool) causes the locking assembly **34** to be threaded onto the reciprocally-threaded coaxial cable outlet plug **36** as shown in FIG. **3**.

FIG. **4** is essentially the same as FIG. **3**, the differences being that, in place of a locking assembly **34**, a dummy coupling assembly **60** is shown, and the coaxial outlet plug **36** and the wall plate **38** are shown in phantom. As FIG. **4** shows, a rearwardly-projecting threaded member **58** is received within the cooperating bore **32** which is located within the spring-biased plunger **16**.

Referring generally to FIG. **4**, the tool **10** is shown inserted over the coupling assembly **60**. The coupling assembly **60** is shown to be comprised of an internally threaded freely rotating insert member **144** located within a bore **148** of a cylinder **140**. The coupling assembly **60** further comprises a 75 ohm terminator **154** adapted for putting a 75 ohm load between the internal conductor of a coaxial cable and the shield connection as was the 75 ohm terminator **54** heretofore described with reference to FIG. **3**. The variation shown in FIG. **4** includes the rearwardly-projecting threaded member **58** having the appearance of a coaxial cable outlet rather than the locking cap **42** shown in the embodiment of FIG. **3**. Thus, an attempted, unauthorized utilization of the coaxial connector made by connecting a suitable connector to the threaded portion **58** will be fruitless as the threaded portion **58** is merely connected to ground through the shield connector as shown. A coaxial cable outlet plug **36**, shown in phantom, to which the coupling assembly **60** is connected will be terminated by the 75 ohm load provided by the terminator **154**. Thus, the embodiment shown in FIG. **4** has the dual purpose of terminating and locking the coaxial cable outlet plug **36**, and also fooling one who is attempting to make un-authorized use of such a connector **36** by presenting a threaded member **58** having the outward appearance of being an outlet plug.

The embodiment described above is merely exemplary, and those skilled in the art will be able to make many modifications and variations therein within the spirit and scope of the invention. For example, the lugs **28** and slots **56** can be interchanged in position. In such case, torque-applying and torque-transmitting means are still provided. Accordingly, all such modifications and variations are included within the intended scope of the invention as defined by the following claims.

I claim:

1. A locking assembly for locking a threaded coaxial cable outlet comprising:

a. an insert member formed with thread means threadable onto said coaxial cable outlet intended to be locked;

b. cylinder means surrounding said insert member coaxially, said cylinder means being freely rotatable with respect to said insert member about a common axis; and

c. torque receiving means on the end of said insert member having said thread means.

2. The locking assembly of claim **1** wherein said insert member is held within said cylinder means by a flange extending from said cylinder means at the end of said cylinder means adjacent said thread means.

3. The locking assembly of claim **2** further comprising a terminator adapted to be connected between the center electrode and the shield of said coaxial cable outlet when said locking assembly has been threaded thereon.

4. The locking assembly of claim **3** wherein said terminator comprises a 75 ohm resistor.

5. The locking assembly of claim **4** wherein said cylindrical member encloses said insert member on the end opposite the end having said thread means.

6. The locking assembly of claim **4** wherein the end of said insert member opposite the end having said thread means extends through said cylindrical means and is made to simulate the appearance of a coaxial cable outlet.

7. The locking assembly of claim 1 wherein said torque receiving means comprises at least one slot on the end of the said insert member having said thread means.

8. The locking assembly of claim 1 further comprising a tool for locking and unlocking said locking assembly, said tool comprising:

a. a first section adapted to be fitted over said cylinder means;

b. torque transmitting means at the end of said first section adapted to connect with said torque receiving means; and

c. a handle for turning said first section while said torque transmitting means is connected to said torque receiving means.

9. The locking assembly of claim 8 wherein said first section comprises a half-cylindrical section having a length greater than the length of said cylinder means and a diameter adapted to be fitted over said cylinder means.

10. The locking assembly of claim 9 wherein said torque transmitting means comprises at least one lug attached to a semicircular flange at one end of said half-cylindrical section.

11. The locking assembly of claim 10 wherein said handle comprises a cylindrical section attached to said half-cylindrical section at the end of said half-cylindrical section disposed from said torque transmitting means.

12. The locking assembly of claim 11 further comprising a spring-biased plunger within said handle for holding said cylindrical member when said torque transmitting means coacts with said torque receiving means.

* * * * *