(12) PATENT
(19) AUSTRALIAN PATENT OFFICE

(11) Application No. AU 200163601 B2
(10) Patent No. 769925

(54) Title
Improved container

(51)6 International Patent Classification(s)
B65D 005/20 B65D 021/032
B65D 005/28

(21) Application No: 200163601 (22) Application Date: 2001.08.22

(30) Priority Data

(31) Number	(32) Date	(33) Country
PQ9581	2000.08.22	AU

(43) Publication Date : 2002.02.28
(43) Publication Journal Date : 2002.02.28
(44) Accepted Journal Date : 2004.02.12

(71) Applicant(s)
Visy Board (NZ) Limited

(72) Inventor(s)
Clint Paul Moka

(74) Agent/Attorney
Griffith Hack,GPO Box 1285K,MELBOURNE VIC 3001

(56) Related Art
US 5673848
US 5535941
US 4770339

ABSTRACT

A container (1) is formed of side walls (2a) and end walls (2b) and a bottom wall (10). Support posts (5) are formed at each corner, the support posts being formed of a layer of material integral with the end walls (2b). Additional reinforcing (4) is formed by an additional layer of material integral with the posts (5) and folded back on itself.

P/00/011
Regulation 3.2

AUSTRALIA

Patents Act 1990

ORIGINAL
COMPLETE SPECIFICATION
STANDARD PATENT

Invention Title: **Improved container**

The following statement is a full description of this invention, including the best method of performing it known to us:

IMPROVED CONTAINER

Technical Field

This invention relates to improvements to containers. Specifically a container formed in accordance with the present invention may be constructed from corrugated cardboard and may be used to form a substantially box shaped container with sufficient strength to allow numerous loaded containers to be stacked one on top of each other. Reference throughout this specification will also be made to the present invention being used to box, package or contain kiwifruit. However, those skilled in the art should appreciate that that reference throughout this specification should in no way be seen as limiting.

Background Art

Numerous forms of containers are used to package products and articles to be transported. Containers may be used to protect products or articles from damage during transportation, and also allow a large number of individual articles packaged within a container to be handled easily and quickly.

Where large volumes of products or individual articles are to be packaged or transported, it is common for a carton or box formed of corrugated cardboard to be used to contain same. In numerous instances cartons of packaged products will be stacked one on top of each other on a pallet ready for transportation.

When cardboard cartons or boxes are stacked on top of each other, the boxes at the bottom of the stack can come under significant loads from the weight of the boxes above them. This can cause damage to the bottom boxes, causing them to bulge out at the sides and bottom faces, creating an unattractive and unsightly package for the end consumer. Furthermore, as cardboard boxes deform under loads, the articles or products they contain can also be damaged by loads applied to the top of boxes.

This problem in corrugated cardboard boxes or trays has been addressed in the past by the use of reinforcing end posts in each corner of the carton or tray. A well known example of such a carton or tray is marketed under the trade mark

VISOPOST. Another example of this type of cardboard carton or box is disclosed in New Zealand Patent No. 330617. In each of the above examples, additional lengths of cardboard sheeting are provided in the blank from which the box or tray is formed and these lengths are folded up to the corners of the resulting box or tray to create a pillar or post. The resulting post improves the load-bearing characteristics of the box or tray when placed in a stack.

The applicant has found that, while such corner post boxes have improved load bearing characteristics, they are not entirely suited to the packaging of some forms of food produce. For example, kiwifruit are packaged in boxes that need to be stored in high humidity environments for long periods of time. The moisture content in the surrounding air can saturate the cardboard used and therefore degrade the strength of the box and promote bulges forming under loads in the bottom and sides of the box. The applicants believe that, if the corner post boxes or trays outlined above were used in this environment, the high moisture content would cause the stacked boxes or trays to fail by bulging at the sides and bottom of the box.

An improved container that solved or addressed any or all of the above problems would be of advantage. Specifically an improved container constructed from cardboard with a strong structure resistant to compression when stacked in a high humidity environment would be of advantage.

It is an object of the present invention to address the foregoing problems or at least to provide the public with a useful choice.

Further aspects and advantages of the present invention will become apparent from the ensuing description that is given by way of example only.

Disclosure of the Invention

According to one aspect of the present invention there is provided a container formed of sheet material and including a base, opposed side walls, and opposed end walls, each corner of the container including a corner support formed of a layer of said sheet material integral with said end walls, each said layer of material being folded back over itself inside an end wall to form an additional reinforcing support for the end walls adjacent the corner supports.

In one form, the corner support includes a corner post structure and the additional support is positioned adjacent the corner post structure inside the end walls of the container.

Preferably, the container includes a known corner post structure to which a flap which is folded in itself is attached to define a double thickness reinforcing container which is secured to a wall of the container to form a layer of triple thickness.

According to another aspect of the present invention there is provided a blank a container blank for forming a container from sheet material including integral panels defining a bottom, side and end walls, and additional panels integral with the end wall panels and extending from opposite edges thereof, the additional panels each defining a corner support and a reinforcing support for the end walls which is formed by folding the sheet material back on itself inside an end wall.

The container or blank defined above is preferably formed from a corrugated board material, the corrugations provided in said container bottom preferably running in the same direction as the corrugations provided in said container side walls.

By running the corrugation in the two non-reinforced side walls of the box in the same directions as the corrugations in the bottom of the box, this adds to the overall strength of the bottom of the box. The two non-reinforced side walls act to support or reinforce the bottom of the box, and thereby alleviate or reduce the chances of the bottom of the box failing when placed under heavy load conditions. This will obviate or minimise "bottom bulge" occurring in the resulting box, thereby providing an attractive and strong package for the end user of the products or articles to be packaged.

The present invention is adapted to provide a container that can be used to package and/or easily transport any number of different types of articles. Such

containers may be used in a wide range and a number of industries, but reference throughout this specification will be made to the present invention being used to provide a container, carton, box or tray for the packaging and transportation of produce such as kiwifruit. Those skilled in the art should appreciate that reference to the packaging and transportation of kiwifruit only throughout this specification should in no way be seen as limiting, as the present invention may be used in numerous other applications and industries.

In a preferred embodiment a container formed in accordance with the present invention may be provided with a substantially rectangular shape with a bottom face and four side walls or two side walls and two end walls. The container may also be provided with a partial or complete lid or closure which may be hinged to the side walls along a fold or score line.

In a preferred embodiment a box formed in accordance with the present invention may be constructed from corrugated cardboard.

Brief Description of the Drawings

Further aspects of the present invention will become apparent from the following description that is given by way of example only and with reference to the accompanying drawings in which:

Figure 1 illustrates a perspective view of a container as configured in accordance with one embodiment of the present invention;

Figure 2 is a top open perspective view of the container in Figure 1 partly cut away to show the reinforcing structure;

Figure 3 is an open topped perspective view of the same container of Figures 1 and 2, and

Figure 4 illustrates a blank from which the container of Figures 1 and 3 may be formed.

Best Modes for Carrying out the Invention

Figures 1, 2, 3 and 4 show a container configured in accordance with a

preferred embodiment. The container in question is shown in a perspective view in Figure 1, a top view in Figure 2 and a side view in Figure 3. Figure 4 shows a blank for forming the container of Figures 1 to 3.

In the embodiment shown the container is configured as a box 1 which is formed to include side walls 2a, end walls 2b, top surface flaps 3 and a bottom 10.

Each corner of the box 1 includes a corner support post 5 (Figs. 2 and 3) which is adapted to reinforce the corners and side walls of the box. The two end walls 2b are substantially reinforced when compared with the two side walls 2a by additional layers of cardboard from the blank used to form the box. In this embodiment portions of the blank are folded over themselves at least twice in the formation of a corner support. These double layers of reinforcing 4 are provided only at the end walls 2b of the resulting box and integral with the posts. This significantly reinforces the end walls 2b while leaving the side walls 2a to be formed from a single layer of cardboard only. The formation of the reinforcing double layers 4 as an integral part of the corner support posts 5 ensures integrity of the posts along their length obviating any tendency to splay outwardly on application of vertical forces.

In the embodiment shown, both top surface flaps 3 are connected to the side walls 2a through a strip of material 6. This strip 6 is preferably formed through weakening the material of the cardboard blank through score lines, perforations, cuts or small apertures. By connecting a top flap 3 to a side wall 2a in this manner, the forces developed from loads placed on the top flap 3 are not transmitted directly through to a side wall 2a. These loads will, therefore, be directed onto the reinforced end walls 2b and corner posts 5 and be supported by same. The strips of material 6 connecting a top flap 3 to a side wall 2a will allow the top flap 3 to flex downwards under load, thereby reducing the chances of a load on the top of the box being transferred into a side wall 2a.

Referring now to Figure 4, the blank includes a box base 10, side walls 11 and 12, end walls 13 and 14, and corner posts 15, 16, 17 and 18, to which are attached additional reinforcing flaps 19, 20, 21 and 22, which are folded along fold

lines F1 to F4, and then glued together, before the corner posts are assembled, to define in the erected box or tray the additional reinforcing layers 4 described above. These layers 4 are glued in the folded and glued condition to the inside face of the end walls 13-14 (numeral 2b in Figures 1 to 3) to provide with the end walls a triple layer of material to reinforce the load carrying capacity of the corner posts 5 in the box or tray.

The blank also has top flaps or lids 23 and 24 (numeral 3 in Figs 1 to 3) which extend from the side walls 11 and 12 and are bent along parallel fold lines as illustrated.

The blank of Figure 4 is designed to be machine erected by a known corner post machine modified to fold and glue the flaps 19 to 22 before the blank is erected in the known manner to form the reinforced corner post box or tray embodying the invention.

The dimensional relationship of the blank of Figure 4 are illustrative of one particular embodiment only and may be varied to provide boxes or trays of different dimensions.

The use of a corner support in combination with the provision of reinforced layers on two of the end walls of the container substantially reinforce, these sections of the resulting box. Furthermore, by connecting the top surfaces or lids of the container to the appropriate reinforced side walls through a strip of material ensures that substantially all the load placed on the top of the box will be transferred onto the reinforced end walls and corner posts.

As the non reinforced side walls 2a need not support any load placed on them directly from above they may in turn be configured to support or reinforce the bottom 10 of the container 1 through having the corrugations of the corrugated material of which the blank is made run substantially in the same direction as the corrugations provided on the bottom of the box which is preferably in the direction of end to end.

EDITORIAL NOTE

APPLICATION NUMBER - 63601/01

THIS SPECIFICATION DOES NOT CONTAIN PAGE 8.

THE CLAIMS DEFINING THE INVENTION ARE AS FOLLOWS:

1. A container formed of sheet material and including a base, opposed side walls, and opposed end walls, each corner of the container including a corner support formed of a layer of said sheet material integral with said end walls, each said layer of material being folded back over itself inside an end wall to form an additional reinforcing support for the end walls adjacent the corner supports.

2. A container according to claim 1 wherein the corner support comprises a corner post structure.

3. A container according to claim 1 or claim 2 wherein the corner support is inside a side wall of the container.

4. A container according to any one of the preceding claims wherein the material folded back over itself is adhered to itself by adhesive.

5. A container according to any one of the preceding claims wherein the additional reinforcing support is adhered to an end wall by adhesive.

6. A container according to any one of the preceding claims wherein a lid panel is formed integral with at least one side wall, the lid panel being connected to the side wall by one or more strips of material which separate the lid from the respective side wall.

7. A container according to claim 6 wherein a lid panel is formed integral with each side wall, each lid panel being connected to the respective side wall by one or more strips of material.

8. A container according to claim 6 or claim 7 wherein the strip or strips are defined by lines of weaknesses formed by scoring, perforations, cuts or apertures.

9. A container according to any one of the preceding claims wherein the sheet material from which the container is formed is corrugated cardboard with the corrugations extending from one end wall to the other.

10. A container blank for forming a container from sheet material including integral panels defining a bottom, side and end walls, and additional panels integral with the end wall panels and extending from opposite edges thereof, the additional panels each defining a corner support and a reinforcing support for the end walls which is formed by folding the sheet material back on itself inside an end wall.

11. A container blank according to claim 10 further including lid panels connected to the side panels through one or more strips of material.

12. A container blank according to claim 10 or claim 11 formed of corrugated cardboard with the corrugations or extending in the direction from one end panel to the other.

13. A container substantially as hereinbefore described with reference to the accompanying drawings.

14. A container blank substantially as hereinbefore described with reference to the accompanying drawings.

Dated this 12th day of November, 2003
VISY BOARD (NZ) LIMTIED
By their Patent Attorneys
GRIFFITH HACK
Fellows Institute of Patent and
Trade Mark Attorneys of Australia

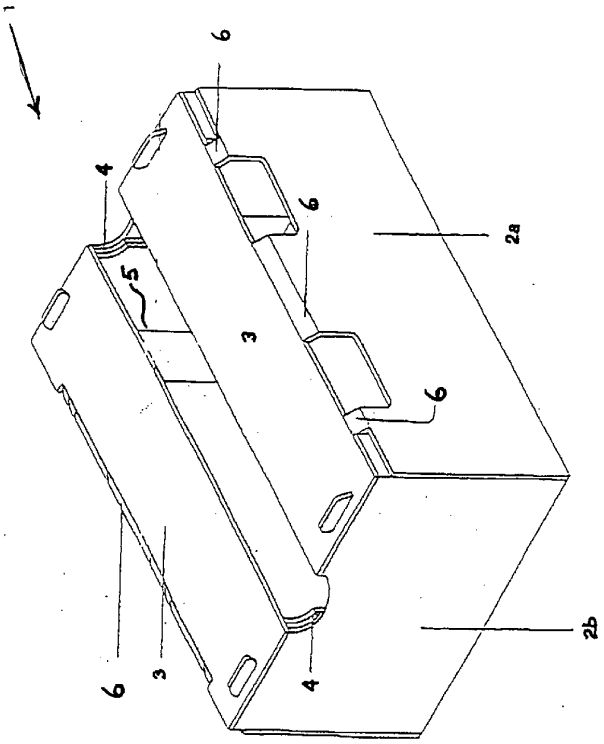

FIGURE 1

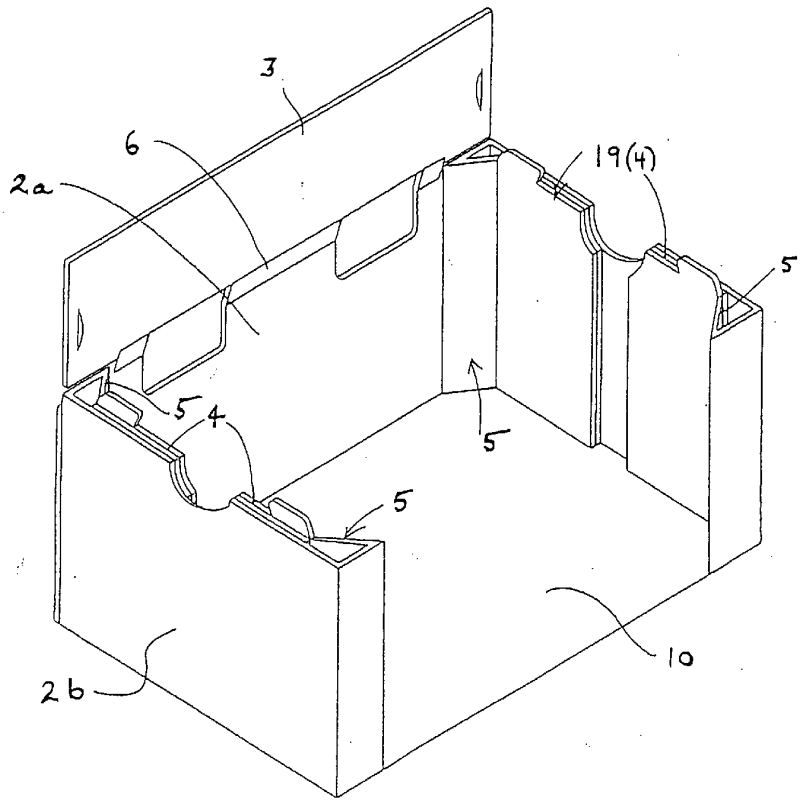

FIGURE 2

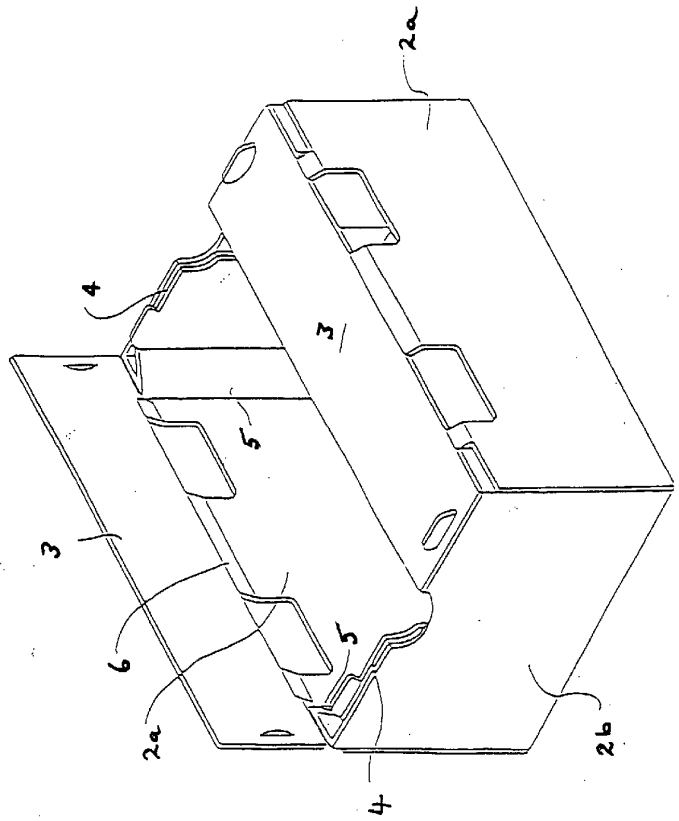

FIGURE 3

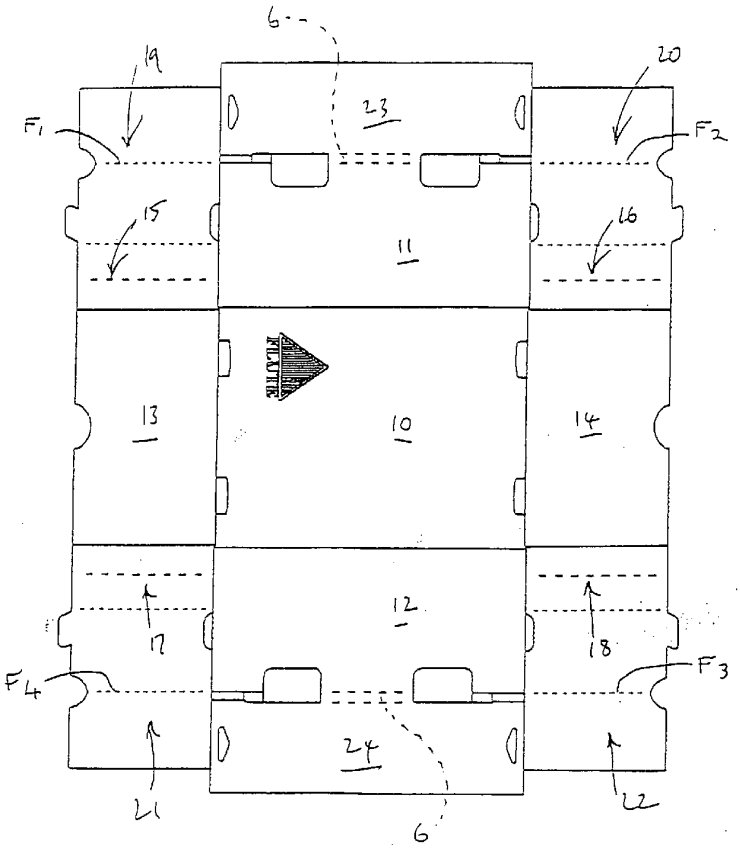

FIGURE 4