US00D487549S

(12) **United States Design Patent** (10) **Patent No.: US D487,549 S**
Berish et al. (45) **Date of Patent: ** Mar. 16, 2004**

(54) **BEVERAGE FLOOR DISPLAY STAND**

(75) Inventors: **Brian Berish**, Chicago, IL (US); **Brett Berish**, New York, NY (US)

(73) Assignee: **Sovereign Brands, L.L.C.**, Chicago, IL (US)

(**) Term: **14 Years**

(21) Appl. No.: **29/182,971**

(22) Filed: **Jun. 4, 2003**

(51) **LOC (7) Cl.** **06-04**
(52) **U.S. Cl.** **D6/450**; D6/457; D6/467
(58) **Field of Search** D6/397, 405, 630, D6/455, 457–462, 465, 467–469, 473, 474, 479, 450; 108/59, 91–93, 106, 147.12, 147.13; 211/13.1, 85.1, 85.21, 49.1, 50, 70, 74, 78, 60.1, 134, 189, 195; 248/102, 105, 346.03, 349.1

(56) **References Cited**

U.S. PATENT DOCUMENTS

D208,340 S * 8/1967 Pollenz D6/450
D237,565 S * 11/1975 Warren et al. D6/465
D291,417 S * 8/1987 Morgan ..... D6/457 X
D296,164 S * 6/1988 Scholl ..... D6/457 X
4,951,827 A * 8/1990 Moransais 211/59.1
5,454,187 A * 10/1995 Wasserman 47/39
D385,438 S * 10/1997 Jay D6/450

* cited by examiner

Primary Examiner—Cathron C. Brooks

(57) **CLAIM**

The ornamental design for the beverage floor display stand, as shown and described.

DESCRIPTION

FIG. **1** is a side perspective view of a floor display stand having an outline in the shape of a bottle;
FIG. **2** is a side elevational view of the floor display stand, showing the spiral shaped wire portion on which bottles are hung, displayed, and dispensed;
FIG. **3** is another side elevation view thereof taken on a different plane; and,
FIG. **4** is a view taken from the top of the stand looking downward at it.
The broken line showing of bottles and a stand base are for illustrative purposes only and form no part of the claimed design.

1 Claim, 3 Drawing Sheets

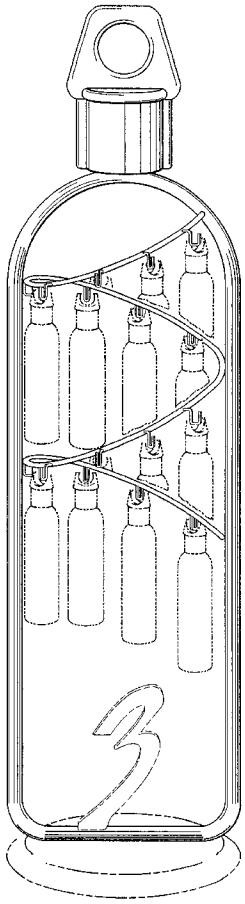

Fig. 1

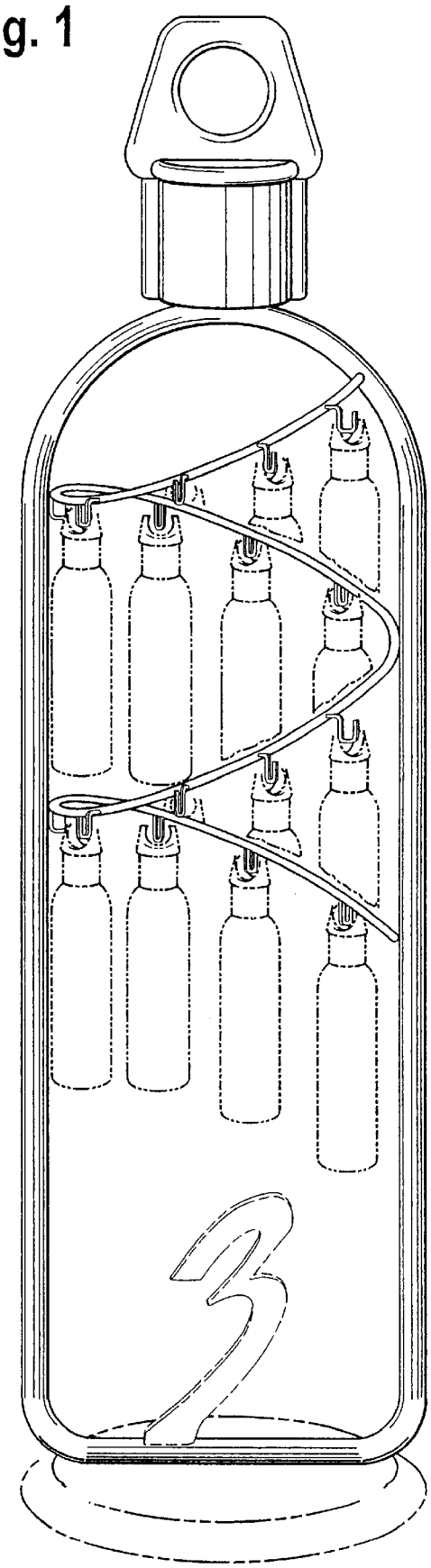

Fig. 2

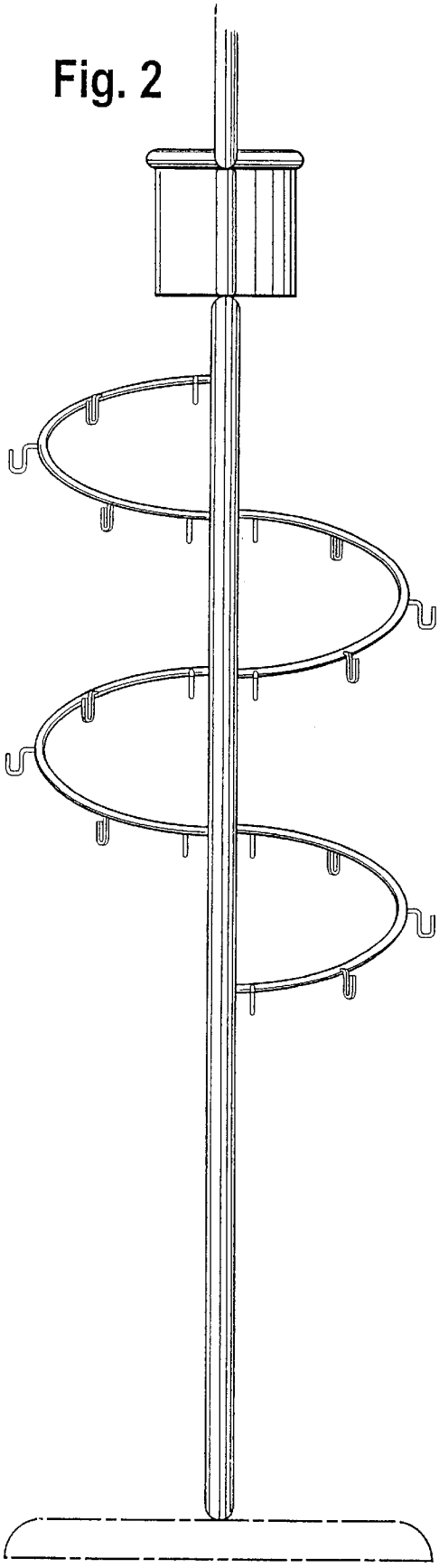

Fig. 3

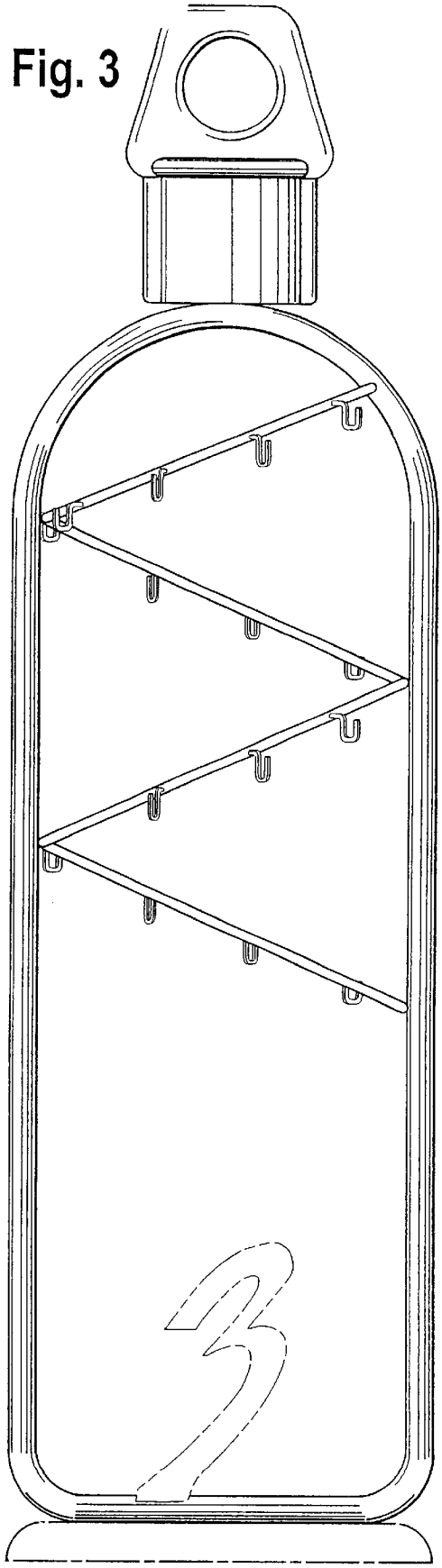
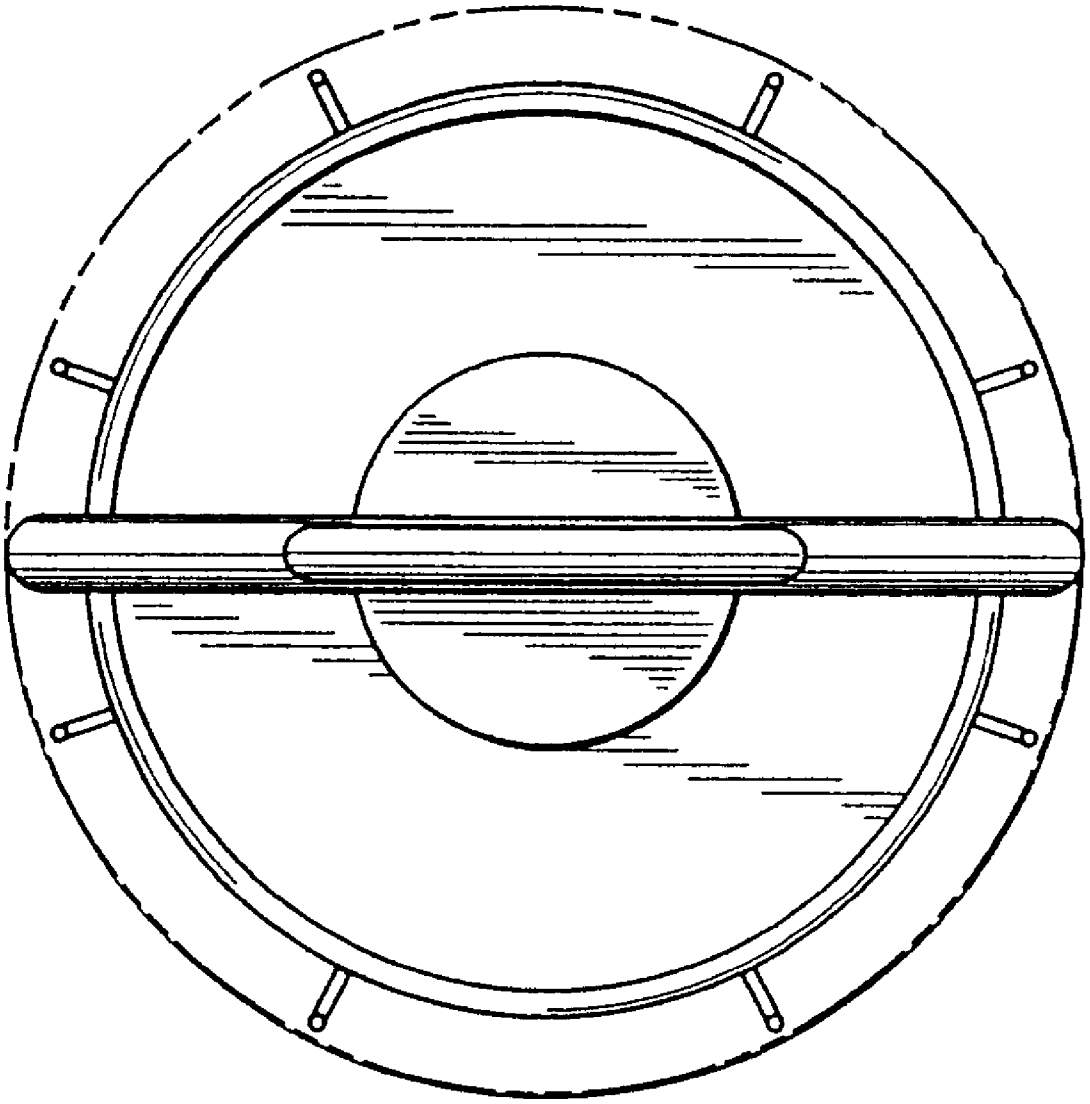
Fig. 4