United States Patent [19]

Humphrey et al.

[11] **Des. 249,397**

[45] ** **Sep. 19, 1978**

[54] **FACE GUARD FOR MOUNTING ON AN ATHLETIC HELMET**

[75] Inventors: **Delby C. Humphrey**, Terre Haute; **Robert D. Humphrey**, Litchfield, both of Ill.

[73] Assignee: **Schutt Manufacturing Company**, Litchfield, Ill.

[**] Term: **14 Years**

[21] Appl. No.: **728,394**

[22] Filed: **Sep. 30, 1976**

[51] **Int. Cl.** ..... **D2—03**
[52] **U.S. Cl.** **D2/233**
[58] **Field of Search** D2/231, 233; 2/9

[56] **References Cited**

U.S. PATENT DOCUMENTS

3,729,746 5/1973 Humphrey 2/9

Primary Examiner—Melvin B. Feifer
Attorney, Agent, or Firm—Albert L. Jeffers

[57] **CLAIM**

The ornamental design for a face guard for mounting on an athletic helmet, substantially as shown.

DESCRIPTION

FIG. **1** is a side elevational view of a face guard for mounting on an athletic helmet showing our new design;

FIG. **2** is a front elevational view looking in the direction of arrow II on FIG. **1**; and

FIG. **3** is a plan view looking down on top of the face guard.

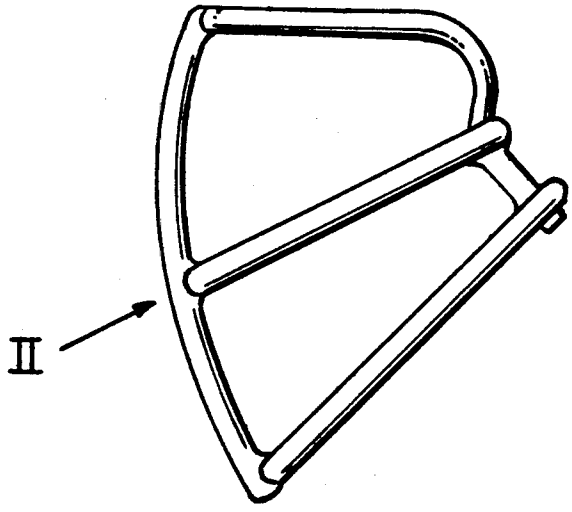

FIG-1

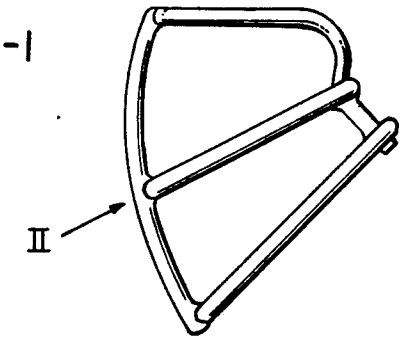

FIG-2

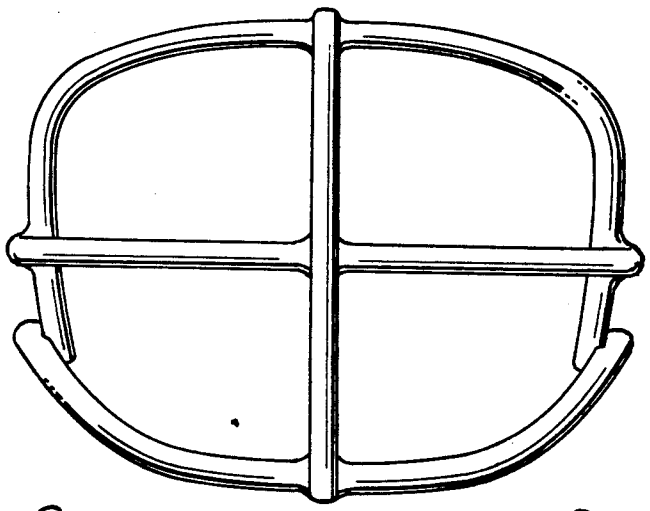

FIG-3

