Innovation, Sciences et Développement économique Canada
Office de la Propriété Intellectuelle du Canada

Innovation, Science and Economic Development Canada
Canadian Intellectual Property Office

CA 2947225 C 2020/02/25

(11)(21) **2 947 225**

(12) **BREVET CANADIEN**
CANADIAN PATENT

(13) **C**

(22) **Date de dépôt/Filing Date:** 2012/08/27

(41) **Mise à la disp. pub./Open to Public Insp.:** 2013/03/07

(45) **Date de délivrance/Issue Date:** 2020/02/25

(62) **Demande originale/Original Application:** 2 844 261

(30) **Priorités/Priorities:** 2011/08/29 (US13/137,606); 2011/12/05 (US13/373,886)

(51) **Cl.Int./Int.Cl.** ***B67D 1/12*** (2006.01), ***B67D 1/00*** (2006.01)

(72) **Inventeurs/Inventors:**
WALTON, PHILIP A., GB;
VIPOND, STEPHEN J., GB;
RIVARD, DENNIS L., CA;
NICKERSON, TYLER W., CA

(73) **Propriétaire/Owner:**
CARDOMON INTERNATIONAL LIMITED, CN

(74) **Agent:** NORTON ROSE FULBRIGHT CANADA LLP/S.E.N.C.R.L., S.R.L.

(54) **Titre : APPAREIL POUR DISTRIBUER UN LIQUIDE PROVENANT D'UN RECIPIENT DE STOCKAGE DE LIQUIDE**
(54) **Title: AN APPARATUS FOR DISPENSING A LIQUID FROM A LIQUID STORAGE CONTAINER**

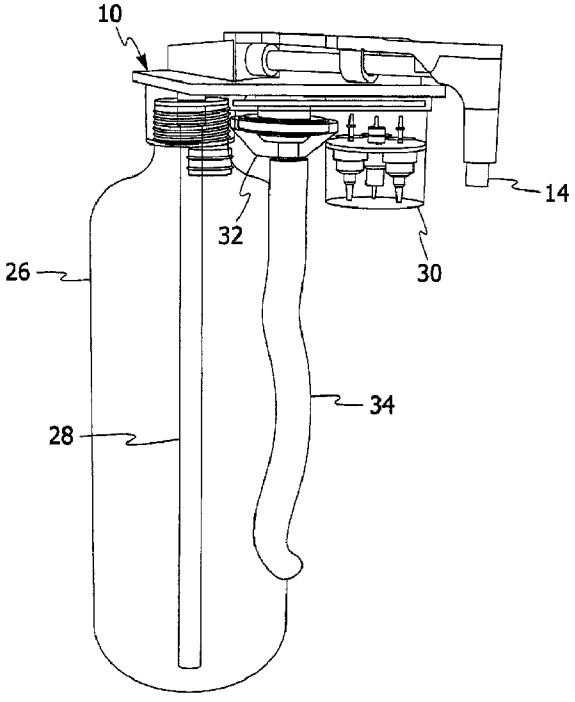

(57) **Abrégé/Abstract:**
A liquid dispenser for dispensing a liquid from a liquid storage container operably associated with the liquid dispenser. Preferably, the liquid dispenser includes a main housing having a dispensing location at which liquid from a liquid storage container is

CA 2947225 C 2020/02/25
(11)(21) 2 947 225
(13) C

(57) **Abrégé(suite)/Abstract(continued):**
dispensed and a storage location for storing a liquid storage container. The dispensing location is preferably disposed above at least a portion of the storage location. A reservoir is disposed in the main housing. The reservoir is configured to receive a liquid from the liquid storage container prior to the liquid being dispensed from the main housing. Preferably, the liquid dispenser includes a removable liquid transport assembly removable from the main housing. The removable liquid transport assembly preferably includes a substantially rigid liquid manifold, a valve assembly, a riser tube, a reservoir, a reservoir dip tube, a pump head, a pinch tube and a dispensing nozzle that are removable as a single unit from the main housing. Preferably, the liquid dispenser includes a single self-priming pump to pump liquid from the liquid storage container to one or more dispensing nozzles. Preferably, the valve assembly includes a non-return valve and a pressure relief valve that act in concert to control the flow of liquid between the liquid storage container and the reservoir. The non-return valve is preferably configured to minimize the pressure drop across the non-return valve to reduce the size of the pump and prevent the non- return valve from adversely affecting the flow of liquid from the liquid storage container to the reservoir. The liquid dispenser includes a liquid storage container dip tube that is detachably connected to the riser tube to permit the liquid storage container dip tube to be removed separately from the other components of the removable liquid transport assembly. A removable liquid transport assembly configured to be readily installed in and removed from a

ABSTRACT

A liquid dispenser for dispensing a liquid from a liquid storage container operably associated with the liquid dispenser. Preferably, the liquid dispenser includes a main housing having a dispensing location at which liquid from a liquid storage container is dispensed and a storage location for storing a liquid storage container. The dispensing location is preferably disposed above at least a portion of the storage location. A reservoir is disposed in the main housing. The reservoir is configured to receive a liquid from the liquid storage container prior to the liquid being dispensed from the main housing. Preferably, the liquid dispenser includes a removable liquid transport assembly removable from the main housing. The removable liquid transport assembly preferably includes a substantially rigid liquid manifold, a valve assembly, a riser tube, a reservoir, a reservoir dip tube, a pump head, a pinch tube and a dispensing nozzle that are removable as a single unit from the main housing. Preferably, the liquid dispenser includes a single self-priming pump to pump liquid from the liquid storage container to one or more dispensing nozzles. Preferably, the valve assembly includes a non-return valve and a pressure relief valve that act in concert to control the flow of liquid between the liquid storage container and the reservoir. The non-return valve is preferably configured to minimize the pressure drop across the non-return valve to reduce the size of the pump and prevent the non-return valve from adversely affecting the flow of liquid from the liquid storage container to the reservoir. The liquid dispenser includes a liquid storage container dip tube that is detachably connected to the riser tube to permit the liquid storage container dip tube to be removed separately from the other components of the removable liquid transport assembly. A removable liquid transport assembly configured to be readily installed in and removed from a

AN APPARATUS FOR DISPENSING A LIQUID FROM A LIQUID STORAGE CONTAINER

FIELD OF THE INVENTION

The present invention is directed to a dispensing apparatus for dispensing liquid from a liquid storage container and a replaceable liquid transport assembly for conveying liquid between a liquid storage container and a dispensing location of the dispensing apparatus. The dispensing apparatus may dispense any suitable liquid including but not limited to chilled drinking water, hot water, ambient temperature drinking water, carbonated liquid and/or any combination thereof. The liquid storage container may include but is not limited to a replaceable five (5) gallon water bottle stored in a lower portion of the dispensing apparatus. In its most preferred form, the present invention is directed to a water cooler for dispensing at least chilled drinking water from a replaceable five (5) gallon water bottle stored in a lower portion of the water cooler in an upright orientation.

BACKGROUND OF THE INVENTION

A significant number of existing water dispensers use gravity as the driving force to dispense water from the water dispenser. In this type of water dispenser, the water bottle is positioned above the dispensing location. These dispensers are referred to as "Top-Loading" water dispensers. Top-Loading water dispensers typically include means for receiving a five (5) gallon water bottle at the uppermost portion of the water dispenser. Five (5) gallon water bottles are quite heavy making it difficult for some individuals to mount the water bottle on the uppermost portion of the water cooler. Top-Loading water dispensers typically dispense water for human consumption. Therefore, it is important that the water contact surfaces of the water dispenser be periodically cleaned. The cleaning process is generally known as "sanitization." Top-Loading water dispensers typically are simple devices with few components in contact with the drinking water. Hence, the sanitization process is relatively easy. A number of Top-Loading water dispensers are designed to improve the sanitization process. U.S. Patent Nos. 5,361,942 and 5,439,145 disclose Top-Loading water dispensers designed to improve the sanitization process. Ebac Limited sells Top-Loading water dispensers designed to improve the sanitization process utilizing at least some of the features disclosed in U.S. Patent Nos. 5,361,942 and 5,439,145 including the removable manifold unit, reservoir and associated plastic or rubber tubing. This removable assembly is marketed under the Ebac Limited trademark WATERTRAIL.

To overcome the problems of Top-Loading water dispensers, water dispensers in which the water bottle is stored in the lower portion of the water dispenser have been proposed. Since these systems cannot rely upon gravity to dispense drinking water, pumps are typically employed

to pump the drinking water to the dispensing location located above the water bottle. These types of water dispensers are referred to herein as "Bottom-Loading" water dispensers. An example of such a water dispenser is disclosed in U.S. Patent Publication No. 2005/0072813. Bottom-Loading water dispensers address the water bottle installation problems associated with Top-Loading water dispensers. However, Bottom-Loading water dispensers employ significantly more water contact components than Top-Loading water dispensers and, therefore, are more difficult to sanitize effectively. Ebac Limited introduced a Bottom-Loading water dispenser under the trademark EASYLOADER with a removable WATERTRAIL in an effort to make sanitization easier. However, this water dispenser was expensive to produce and has not succeeded commercially.

Therefore, there is a significant need for a Bottom-Loading liquid dispenser that can be readily and easily sanitized while also being relatively inexpensive to manufacture. There is also a significant need for a simplified removable liquid transport assembly that conveys liquid between a liquid storage container, one or more reservoirs and a dispensing nozzle or nozzles of the liquid dispenser that can be manufactured at a relatively low cost and can be readily removed and replaced to ensure effective sanitization of the liquid dispenser.

OBJECTS AND SUMMARY OF THE INVENTION

An object of the present invention is to provide a novel and unobvious apparatus for dispensing liquid from a liquid storage container.

Another object of a preferred embodiment of the present invention is to provide a Bottom-Loading water dispenser that is relatively inexpensive to produce and is also easy to sanitize in a very short period of time.

Still another object of a preferred embodiment of the present invention is to provide a removable liquid transport assembly that is relatively inexpensive to manufacture while allowing for effective sanitization of the water dispenser.

A further object of a preferred embodiment of the present invention is to provide a removable liquid transport assembly configured to reduce the number of components thereof including the number of flexible hoses or conduits associated therewith.

Yet another object of a preferred embodiment of the present invention is to provide a Bottom-Loading water dispenser that requires only a single pump to pump water from a liquid storage container to one or more dispensing nozzles of a water dispenser.

Still a further object of a preferred embodiment of the present invention is to provide a removable liquid manifold that is substantially rigid with minimal flexible hosing associated therewith to expedite removal and replacement.

Yet still another object of a preferred embodiment of the present invention is to provide a removable liquid transport assembly configured to permit removal of a reservoir, reservoir dip tube, pump head, non-return valve, pressure relief valve, riser tube, pinch tube and dispenser nozzle upon removal of a liquid manifold, i.e., the step of removing the liquid manifold

simultaneously effectuates the removal of all of the other aforementioned components of the removable liquid transport assembly.

Still yet a further object of a preferred embodiment of the present invention is to provide a removable liquid transport assembly with a liquid storage container dip tube that can be readily separated from the other components of the removable liquid transport assembly to facilitate removal thereof.

Another object of a preferred embodiment of the present invention is to provide a Bottom-Loading water dispenser that employs a self-priming pump with a pump head and drive motor where the pump head can be readily disconnected and securely connected to the drive motor to permit the removal and replacement of the pump head.

A further object of a preferred embodiment of the present invention is to provide a Bottom-Loading water dispenser that allows water in a reservoir to flow back into a liquid storage container in the event that an operating condition occurs which causes the volume of liquid to rise beyond a predetermined maximum value (e.g., a portion of the liquid in the chilled reservoir should freeze) to prevent damage to one or more components of the water dispenser while preventing liquid in the reservoir from flowing back into the liquid storage container when the volume of liquid does not exceed the predetermined maximum value.

Still a further object of a preferred embodiment of the present invention is to provide a Bottom-Loading water dispenser with a non-return valve that is designed to minimize the pressure drop across the non-return valve to reduce the size of the pump and ensure that the non-return valve has little to no effect on the flow of liquid from the liquid storage container to the reservoir.

Yet still a further object of a preferred embodiment of the present invention is to provide a Bottom-Loading water dispenser that allows water in a reservoir to flow back into a liquid storage container without passing through the pump or pump head in the event that an operating condition occurs which causes the volume of liquid to rise beyond a predetermined maximum value (e.g., a portion of the liquid in the chilled reservoir should freeze) to prevent damage to one or more components of the water dispenser while preventing liquid in the reservoir from flowing back into the liquid storage container when the volume of liquid does not exceed the predetermined maximum value.

It must be understood that no one embodiment of the present invention need include all of the aforementioned objects of the present invention. Rather, a given embodiment may include one or none of the aforementioned objects. Accordingly, these objects are not to be used to limit the scope of the claims of the present invention.

In summary, one preferred embodiment of the present invention is directed to an apparatus dispensing a liquid from a liquid storage container operably associated with the apparatus for dispensing a liquid. The apparatus includes a main housing having a dispensing location at which liquid from a liquid storage container is dispensed and a storage location for storing the liquid storage container. The dispensing location is disposed above at least a portion of the storage location. A reservoir is disposed in the housing. The reservoir is configured to receive a liquid from the liquid storage container prior to the liquid being dispensed from the main housing. A removable manifold is operably connected to the reservoir and the liquid storage container for conveying liquid between the reservoir and the liquid storage container. The removable manifold is further operably connected to the dispensing location to convey a

liquid from the reservoir towards the dispensing location. The removable manifold has an upper chamber and a lower chamber. The upper chamber and the lower chamber share a common wall portion. The upper chamber is configured to direct a liquid from the reservoir towards the dispensing location in a substantially horizontal path. The lower chamber is configured to convey liquid between the liquid storage container and the reservoir in a substantially horizontal path. The upper chamber is disposed above the lower chamber.

Another preferred embodiment of the present invention is directed to an apparatus for dispensing a liquid from a liquid storage container operably associated with the apparatus for dispensing a liquid. The apparatus includes a main housing having a dispensing location at which liquid from a liquid storage container is dispensed and a storage location for storing a liquid storage container. The dispensing location is disposed above at least a portion of the storage location. A reservoir is disposed in the housing. The reservoir is configured to receive a liquid from the liquid storage container prior to the liquid being dispensed from the main housing. A valve assembly is disposed in a liquid flow path between the liquid storage container and the reservoir. The valve assembly includes a non-return valve and a pressure relief valve. The valve assembly further includes a valve housing for housing the non-return valve and the pressure relief valve. The valve assembly is configured such that when a volume of liquid upstream of the valve assembly exceeds maximum capacity, liquid upstream of the valve assembly can return to the liquid storage container. The valve assembly further is configured such that the non-return valve prevents liquid from flowing from the reservoir to the liquid storage container provided that the maximum capacity has not been exceeded.

A further preferred embodiment of the present invention is directed to an apparatus for

dispensing a liquid from a liquid storage container operably associated with the apparatus for dispensing a liquid. The apparatus includes a main housing having a dispensing location at which liquid from a liquid storage container is dispensed and a storage location for storing a liquid storage container. The dispensing location is disposed above at least a portion of the storage location. A reservoir is disposed in the housing. The reservoir is configured to receive a liquid from the storage container prior to the liquid being dispensed from the main housing. A valve assembly is disposed in a liquid flow path between the liquid storage container and the reservoir. The valve assembly includes a non-return valve for preventing liquid from the reservoir to flow back into the liquid storage container. The non-return valve includes means for minimizing pressure drop across the non-return valve to minimize the effect the non-return valve has on liquid flow from the liquid storage container to the reservoir.

Still another preferred embodiment of the present invention is directed to an apparatus for dispensing a liquid from a liquid storage container operably associated with the apparatus for dispensing a liquid. The apparatus includes a main housing having a dispensing location at which liquid from a liquid storage container is dispensed and a storage location for storing a liquid storage container. The dispensing location is disposed above at least a portion of the storage location. A reservoir is disposed in the housing. The reservoir is configured to receive a liquid from the liquid storage container prior to the liquid being dispensed from the main housing. A self-priming pump has a pump head detachably connected to a drive motor. The self-priming pump is configured to pump liquid from the liquid storage container to the reservoir. The pump head is disposed in a removable manifold to allow the pump head to be readily replaced. The pump includes a drive pin and a drive crank. At least one of the drive crank and

the drive pin includes means for facilitating mating of the pump head and the drive motor.

Still a further preferred embodiment of the present invention is directed to an apparatus for dispensing a liquid from a liquid storage container operably associated with the apparatus for dispensing a liquid. The apparatus includes a main housing having a dispensing location at which liquid from a liquid storage container is dispensed and a storage location for storing a liquid storage container. The dispensing location is disposed above at least a portion of the liquid storage location. The apparatus further includes a removable liquid transport assembly including a substantially rigid liquid manifold, a valve assembly, a reservoir and a pump head. The removable liquid transport assembly being configured such that the substantially rigid liquid manifold, the valve assembly, the reservoir and the pump head are removable from the main housing as a single unit. The substantially rigid liquid manifold having a liquid flow channel through which liquid traveling between the liquid storage container and the reservoir passes. At least a portion of the pump head is disposed in the liquid flow channel of the substantially rigid manifold. At least a portion of the valve assembly is disposed in the liquid flow channel of the substantially rigid liquid manifold. The liquid flow channel is configured to connect the valve assembly to the pump head without using any flexible tubing. The reservoir is connected to the liquid flow channel of the substantially rigid manifold. The valve assembly includes at least one of a pressure relief valve and a non-return valve.

Another preferred embodiment of the present invention is directed to a liquid transport assembly for a liquid dispenser to convey a liquid between a liquid storage container and a dispensing location of the liquid dispenser. The liquid transport assembly includes a removable liquid transport assembly configured to be readily installed in and removed from a liquid

dispenser to permit the liquid dispenser to be readily sanitized. The removable liquid transport assembly includes a substantially rigid liquid manifold, a valve assembly, a reservoir and a pump head. The removable liquid transport assembly is configured such that the substantially rigid liquid manifold, the valve assembly, the reservoir and the pump head are removable from the liquid dispenser as a single unit. The substantially rigid liquid manifold has a liquid flow channel through which liquid travel passes during operation of the liquid dispenser. At least a portion of the pump head is disposed in the liquid flow channel of the substantially rigid manifold. At least a portion of the valve assembly is disposed in the liquid flow channel of the substantially rigid liquid manifold. The liquid flow channel is configured to connect the valve assembly to the pump head without using any flexible tubing. The reservoir is connected to the liquid flow channel of the substantially rigid manifold. The valve assembly includes at least one of a pressure relief valve and a non-return valve.

A further preferred embodiment of the present invention is directed to a liquid transport assembly for a liquid dispenser to convey a liquid between a liquid storage container and a dispensing location of the liquid dispenser. The liquid transport assembly includes a removable liquid transport assembly configured to be readily installed in and removed from a liquid dispenser to permit the liquid dispenser to be readily sanitized. The removable liquid transport assembly includes a liquid manifold, a valve assembly, a reservoir and a pump head. The removable liquid transport assembly is configured such that the liquid manifold, the valve assembly, the reservoir and the pump head are removable from the liquid dispenser as a single unit. The valve assembly includes at least a pressure relief valve.

BRIEF DESCRIPTION OF THE DRAWINGS

FIGURE 1 is a cross-sectional view of a water dispenser formed in accordance with a preferred embodiment of the present invention with the liquid transport assembly removed therefrom.

FIGURE 2 is a view similar to that depicted in Figure 1 with the liquid transport assembly formed in accordance with a preferred embodiment of the present invention installed in the water dispenser.

FIGURE 3 is a front elevation view of a water dispenser formed in accordance with a preferred embodiment of the present invention with the water bottle and portions of the main housing removed.

FIGURE 4 is fragmentary perspective view of a water dispenser formed in accordance with a preferred embodiment of the present invention.

FIGURE 5 is a fragmentary perspective view similar to that depicted in Figure 4 but from a slightly different vantage point to reveal components not readily seen in Figure 4.

FIGURE 6 is a fragmentary perspective view of a water dispenser formed in accordance with a preferred embodiment of the present invention with various aspects shown in phantom to permit viewing of other components.

FIGURE 7 is a cross-sectional view of a liquid transport assembly formed in accordance with a preferred embodiment of the present invention.

FIGURE 8 is a fragmentary cross-sectional view of a liquid transport assembly formed in accordance with a preferred embodiment of the present invention.

FIGURE 9 is a fragmentary perspective view of a liquid transport assembly formed in accordance with a preferred embodiment of the present invention with various aspects shown in

phantom to permit viewing of other components.

FIGURE 9A is a perspective view of a portion of the liquid transport assembly formed in accordance with a preferred embodiment of the present invention.

FIGURE 9B is a perspective view similar to Figure 9A with portions removed to permit viewing of the internal cavity of a liquid manifold formed in accordance with a preferred embodiment of the present invention.

FIGURE 9C is a perspective view similar to Figure 9B with the cover plate for one of the lower chambers removed to permit viewing of the internal cavity of the particular lower chamber.

FIGURE 10 is cross-sectional view of a preferred form of valve assembly.

FIGURE 11 is a cross-sectional view of a preferred form of self-priming pump for a preferred embodiment of the present invention with the drive motor shown detached from the pump head.

FIGURE 12 is a cross-sectional view of a preferred form of self-priming pump for a preferred embodiment of the present invention with the drive motor shown connected to the pump head.

FIGURE 13 is a perspective view of a preferred form of drive motor.

FIGURE 14 is a perspective view of a portion of a liquid transport assembly formed in accordance with an alternative embodiment of the present invention with the reservoir shown in phantom to permit viewing of the reservoir dip tube.

FIGURE 15 is a perspective view of the portion of a liquid transport assembly illustrated in Figure 14 taken from a different angle.

FIGURE 16 is a perspective view of the portion of a liquid transport assembly illustrated in Figure 14 as seen from the bottom.

FIGURE 17 is a perspective view similar to Figure 14 with portions removed to permit viewing of the internal cavity of a liquid manifold.

FIGURE 18 is an enlarged perspective view similar to Figure 17 with portions removed to permit viewing of the internal cavity of a liquid manifold.

FIGURE 19 is a fragmentary cross-sectional view of the liquid transport assembly illustrated in Figure 14.

DETAILED DESCRIPTION OF THE PREFERRED EMBODIMENT OF THE INVENTION

The preferred forms of the invention will now be described with reference to **FIGS. 1-19**. The appended claims are not limited to the preferred form and no term and/or phrase used herein is to be given a meaning other than its ordinary meaning unless it is expressly stated otherwise.

FIGS. 1 THROUGH 13

Referring to Figures 1 to 13, a liquid dispenser **A** employing a preferred form of the invention is illustrated in one of many possible configurations. In the most preferred form, liquid dispenser **A** dispenses chilled and hot water for human consumption. However, the present invention is not limited to a liquid dispenser that dispenses chilled and hot water for human consumption. Rather, the liquid dispenser may dispense other liquids including but not limited to ambient temperature drinking water and carbonated liquids. Liquid dispenser **A** includes a main housing **B** having a substantially hollow internal cavity for housing components of the liquid dispenser, a liquid dispensing location **C** and a liquid storage location **D** for receiving and storing a liquid storage container **E** in an upright orientation. Liquid dispenser **A** further includes a cover **F** pivotally connected to main housing **B**. Any suitable latch mechanism may be used to permit the forward edge of the cover **F** to be secured to and released from a corresponding front edge of main housing **B**. Referring to Figures 1 and 2, a cup **G** is shown in the liquid dispensing location **C**. The liquid storage container **E** is preferably a conventional five (5) gallon water bottle oriented in an upright manner.

Referring to Figures 1 and 2, a reservoir housing **2**, a cooling system **3**, a pump motor **4** and a riser tube guide member **6** are disposed in the internal cavity of liquid dispenser **A**. Liquid dispenser

A includes a removable liquid transport assembly **H** as seen, for example, in figures 2 and 6 through 9. The removable liquid transport assembly **H** includes a substantially rigid conduit housing **8** removably connected to a substantially rigid liquid manifold **10** as seen for example in Figures 4 and 5. Conduit housing **8** and manifold **10** may be formed out of any suitable material including plastic. Any suitable fasteners may be used to removably secure conduit housing **8** to liquid manifold **10.** Further, it will be readily appreciated that conduit housing **8** may be permanently fixed to liquid manifold **10** or may be formed as one piece with liquid manifold **10.**

Conduit housing **8** preferably houses a pinch tube **12** and a dispensing nozzle **14.** In the most preferred form, as seen in Figure 9A, the pinch tube **12** and the dispensing nozzle **14** are formed from a single piece of silicon rubber. However, the pinch tube **12** and the dispensing nozzle **14** could be formed from separate pieces that are connected in a fluid tight manner. Referring to Figures 8, 9B and 9C, liquid manifold **10** includes lower chambers **16** and **17,** an upper chamber **18** and a small vent hole **20.** Liquid manifold **10** further includes an internally threaded collar **22** and a secondary dispensing port **24.** Referring to Figures 9B and 9C, lower chamber **16** is smaller than lower chamber **17.** A cover plate **19** separates lower chamber **16** and lower chamber **17.** Opening **21** formed in cover plate **19** allows liquid to pass from lower chamber **16** to lower chamber **17.** Referring to Figures 9A and 9B, lower chamber **17** and upper chamber **18** share wall portion **23.** Further, wall portion **23** forms the lowermost portion of upper chamber **18.**

The removable liquid transport assembly **H** further includes a reservoir **26** having a neck portion with external threads corresponding to the internal threads of collar **22** so that the reservoir **26** can be readily connected to liquid manifold **10.** It will be readily appreciated that reservoir **26** may be connected to liquid manifold **10** in numerous other ways. The removable liquid transport

assembly **H** further includes a reservoir dip tube **28**, a pump head **30**, a valve assembly **32**, a riser tube **34** and a liquid storage container dip tube **36** having a connecting member **38** for removably connecting the liquid storage container dip tube **36** to the lower end **40** of riser tube **34**. As shown in Figure 7, the liquid storage container dip tube **36** extends into liquid storage container **E** through cap **42** of container **E**.

The secondary dispensing port **24** may be connected to a hot water supply assembly **I** including a hot water reservoir (not shown), a hot water reservoir dip tube (not shown), a heating element (not shown), one or more conduits (not shown) for conveying hot water from the hot water reservoir to a second dispensing nozzle (not shown). The hot water supply assembly **I** can be omitted. Where the hot water supply assembly **I** is omitted, the secondary dispensing port **24** may be plugged to prevent the flow of water through port **24**. Alternatively, the secondary dispensing port **24** may be operably connected to a second dispensing nozzle in a well-known manner to dispense water at ambient temperature through the second dispensing nozzle when lever **44** is depressed. Alternatively, the secondary dispensing port **24** can be connected to a carbonated liquid source to dispense a carbonated liquid from the second dispensing nozzle.

Cold water tap lever **46** controls the flow of chilled water from reservoir **26** through dispensing nozzle **14**. Referring to Figure 4, a pinch valve **48** is operably associated with cold water tap lever **46** to control the flow of chilled water out dispensing nozzle **14**. Specifically, pinch valve **48** acts on pinch tube **12** in a well-known manner to prevent the flow of chilled water out dispensing nozzle **14** until such time as lever **46** is depressed. Spring **49** biases lever **46** upwardly causing pinch valve **48** to close off pinch tube **12**. Once the biasing force of spring **49** is overcome by a person depressing lever **46**, a micro switch **51** activates self-priming pump **J** to pump water from container

E upwardly through dip tube **36** and riser tube **34** into lower chamber **16** of liquid manifold **10**. The liquid travels through valve assembly **32** and pump head **30** and passes into lower chamber **17** through opening **21**. Liquid flowing through chamber **17** empties into reservoir **26** (which chills the water stored therein) which in turn causes chilled water stored in reservoir **26** to pass upwardly through dip tube **28** into upper chamber **18** and out dispensing nozzle **14**. The flow of liquid when lever **46** is depressed is shown by the arrows in Figure 8.

Pinch valve **50** is operably associated with lever **44** to act in a similar manner to permit and prevent liquid to flow out a second dispensing nozzle (not shown). In the most preferred form, the liquid dispensed from the second dispensing nozzle is hot water. When lever **44** is depressed, pump **J** pumps liquid from container **E** through dip tube **36** and riser tube **34** into lower chamber **16** of liquid manifold **10** and out secondary dispensing port **24** into a hot water reservoir which in turn causes the hot water stored in the water heating reservoir to flow through a dip tube into one or more conduits connecting the hot water reservoir to the second dispensing nozzle (not shown) and ultimately out the second dispensing nozzle (not shown).

Referring to Figures 8 and 10, the valve assembly **32** will be described in greater detail. Valve assembly **32** includes a valve housing **52** having a lower valve housing member **54** and an upper valve housing member **56**. Preferably, a non-return valve **58** and a pressure relief valve **60** are disposed in housing **52**. Non-return valve **58** includes a spring **62**, a spring follower **64**, a diaphragm **66** and a sealing ring **68**. In the closed position, diaphragm **66** seats on annular seat **67** of sealing ring **68** as illustrated in Figure 10. When lever **46** is depressed, pump **J** sucks liquid upwardly causing the liquid to pass through dip tube **36**, through the riser tube **34** and through openings **70** in lower valve housing member **54**. When the force of the liquid is sufficient to overcome the force of

spring **62**, diaphragm **66** moves upwardly off the annular seat **67** of sealing ring **68** which in turn causes the liquid to pass through flow hole **72** formed in diaphragm **66** out openings **74** in upper valve housing member **56**. The liquid in turn passes through pump head **30** and enters reservoir **26** forcing chilled water stored in reservoir **26** to ultimately pass out through dispensing nozzle **46** as previously described. When lever **46** is released, the pump deactivates ceasing the flow of liquid from container **E** which allows spring **62** to reseat diaphragm **66** on annular seat **67** of sealing ring **68** as shown in Figure 10. When the sealing valve assembly **52** is in the position illustrated in Figure 10, liquid in reservoir **26** cannot flow back into container **E**.

The non-return valve **58** is designed to minimize the pressure drop across the non-return valve to prevent the non-return valve from adversely affecting the flow of liquid from container **E** to reservoir **26**. By designing the valve **58** to have minimal effect on the flow of liquid, the preferred embodiment can minimize the size of the pump. The pressure drop is minimized by the fact that to open the valve **58** flow in the forward direction must pull against the full area of the diaphragm **66** while to close the valve **58** spring **62** need only overcome the annular seat **67** of sealing ring **68**. As is readily evident from Figure 10, the outer diameter of the diaphragm **66** is significantly greater than the diameter of the annular seat **67** of sealing ring **68**. In a most preferred form, the outer diameter of the diaphragm **66** is approximately 32 mm while the diameter of the annular seat **67** of the sealing ring **68** is approximately 8mm. This relationship provides an advantageous pressure ratio of 16:1.

Vent hole **20** allows air to escape through dispensing nozzle **46**. When the supply of liquid in container **E** is exhausted, a small amount of air will be pumped through the liquid transport assembly and vented through vent hole **20** effectively stopping the liquid dispenser **A** from dispensing liquid until the exhausted container **E** is replaced.

The pressure relief valve **60** includes a sealing element **76,** a spring **78** and vent hole **80** formed in sealing ring **68**. Should the volume of the liquid upstream of valve assembly **52** increase beyond a predetermined maximum volume, the upstream liquid will exert a downward force on sealing element **76** which in turn opens vent hole **80** allowing upstream liquid to return to container **E**. Once a sufficient amount of upstream liquid has returned to container **E**, the force of spring **78** will return sealing element **76** to the closed position preventing any additional upstream liquid from flowing back into container **E**. It should be noted that when liquid flows upwardly from container **E** in route to reservoir **26** the liquid does not pass through pressure relief valve **60** as the sealing element **76** is in the position shown in Figure 10 to close off the vent hole **80**. One condition that could cause pressure relief valve **60** to open is where a portion of the liquid in reservoir **26** freezes causing an increase in the effective volume of the liquid upstream of valve assembly **52**. Without pressure relief valve **60**, one or more components of the liquid dispenser **A** could be irreparably damaged.

As seen in Figures 8, 9B and 9C, valve assembly **52** extends into lower chamber **16** of liquid manifold **10** and is secured thereto such that the valve assembly moves with liquid manifold **10**.

The self-priming pump **J** will now be described in greater detail with reference being made to Figures 11 to 13. In the most preferred form, self-priming pump **J** is a three cylinder swash-plate diaphragm pump having a drive motor **4** and a pump head **30**. The pump head **30** can be readily disconnected from the drive motor **4** by merely moving the pump head **30** upwardly from the engaged position shown in Figure 12 to the disengaged position shown in Figure 11. Drive motor **4** includes a drive crank **82** that rotates upon activation of drive motor **4** by micro switch **51.** The drive crank **82** preferably includes a sloping surface **84** that drive pin **86** of pump head **30** strikes when the

pump head **30** is connected to the drive motor **4**. The sloping surface **84** facilitates the mating of drive motor **4** and pump head **30** by guiding the drive pin **86** into the angled socket **88** thereby orienting swash plate **90** at the desired angle. Swash plate **90** is connected to piston **92** that moves in cylinder **94** formed in pump head **30**. Pump head **30** further includes an inlet valve **96**, an inlet chamber **98**, an outlet valve **100** and an outlet chamber **102**. As is readily seen in Figure 8, pump head **30** extends into lower chamber **16** of liquid manifold **10** and secured thereto such that the pump head **30** moves with liquid manifold **10**.

To readily replace the bulk of the liquid transport assembly **H**, one need only raise lid **F**, raise latch **104** to the position shown in Figures 3, 5 and 6 to free conduit housing **8**, turn rotating clamps **105** and **107** to the positions shown in Figure 5 to free manifold **10**, disconnect riser tube **34** from dip tube **36** and raise liquid manifold **10** upwardly which in turn causes all of the elements of the liquid transport assembly shown in Figures 8 and 9 connected to liquid manifold **10** to move upwardly with liquid manifold **10**. Hence, the portions of the liquid transport assembly **H** illustrated in Figures 8 and 9 can be readily removed and replaced as a unit. Once removed the portion of the liquid transport assembly **H** shown in Figures 8 and 9 can be replaced with a new, sanitized assembly having the same components as the removed portion of the liquid transport assembly **H**. Guide member **6** having a hollow cavity generally conforming to the shape of riser tube **34** and having slightly larger dimensions facilitates insertion of the sanitized riser tube **34**. Once separated from riser tube **34**, dip tube **36** can easily and readily be removed and replaced with a sanitized dip tube.

FIGS. 14 THROUGH 19

Referring to Figures 14 through 19, an alternate form of removable liquid transport assembly **K** will now be described that can be used with liquid dispenser **A** in place of liquid transport

assembly **H**. Removable liquid transport assembly **K** is similar to removable liquid transport assembly **H** and, therefore, only the differences will be described in detail. The use of the same reference numerals to describe components of assemblies **H** and **K** indicates the assemblies have the same component. The removable liquid transport assembly **K** includes a substantially rigid conduit housing **8** removably connected to a substantially rigid liquid manifold **10** as seen for example in Figure 14. Conduit housing **8** and manifold **10** may be formed out of any suitable material including plastic. Any suitable fasteners may be used to removably secure conduit housing **8** to liquid manifold **10**. Further, it will be readily appreciated that conduit housing **8** may be permanently fixed to liquid manifold **10** or may be formed as one piece with liquid manifold **10**.

Conduit housing **8** preferably houses a pinch tube **12** and a dispensing nozzle **14**. In the most preferred form, as seen in Figure 14, the pinch tube **12** and the dispensing nozzle **14** are formed from a single piece of silicon rubber. However, the pinch tube **12** and the dispensing nozzle **14** could be formed from separate pieces that are connected in a fluid tight manner. Referring to Figures 14 and 18, liquid manifold **10** includes lower chambers **16** and **17** and an upper chamber **18**. Liquid manifold **10** further includes an internally threaded collar **22** and a secondary dispensing port **24**. Referring to Figure 18, lower chamber **16** is smaller than lower chamber **17**. As seen in Figure 18, a cover plate **109** separates lower chamber **16** and lower chamber **17**. Openings **110** and **112** formed in cover plate **109** allow liquid to pass from lower chamber **16** to lower chamber **17**. Referring to Figure 17, lower chamber **17** and upper chamber **18** share a wall portion **23** which forms the lowermost portion of upper chamber **18**.

The removable liquid transport assembly **K** further includes a reservoir **26** having a neck portion with external threads corresponding to the internal threads of collar **22** so that the reservoir

26 can be readily connected to liquid manifold **10**. It will be readily appreciated that reservoir **26** may be connected to liquid manifold **10** in numerous other ways. The removable liquid transport assembly **K** further includes a reservoir dip tube **28,** a pump head **30** and a valve assembly **108. A** riser tube and a liquid storage container dip tube having a connecting member as described in connection with liquid transport assembly **H** may be used to connect the valve assembly **108** to a liquid storage container similar to liquid storage container **E.**

The secondary dispensing port **24** may be connected to a hot water supply assembly including a hot water reservoir, a hot water reservoir dip tube, a heating element, one or more conduits for conveying hot water from a hot water reservoir to a second dispensing nozzle. The hot water supply assembly can be omitted. Where the hot water supply assembly is omitted, the secondary dispensing port **24** may be plugged to prevent the flow of water through port **24.** Alternatively, the secondary dispensing port **24** may be operably connected to a second dispensing nozzle in a well-known manner to dispense water at ambient temperature through the second dispensing nozzle. Alternatively, the secondary dispensing port **24** can be connected to a carbonated liquid source to dispense a carbonated liquid from the second dispensing nozzle.

The flow of cold water from reservoir **26** through dispensing nozzle **14** can be controlled with the components described in connection with liquid transport assembly **H.**

Referring to Figures 18 and 19, the valve assembly **108** will be described in greater detail. Valve assembly **108** includes valve housing having a lower valve housing member **116** and an upper valve housing member **120**. A plurality of openings **122** are formed in upper valve housing **120** as shown in Figure 18. Referring to Figures 16 and 18, a conduit **123** connects the riser tube (not shown) to the chamber **125** formed by lower valve housing member **116** so that liquid from the

liquid storage container may pass from the riser tube into chamber **125**. Preferably, a non-return valve **124** and a pressure relief valve **126** are disposed in the valve housing. Non-return valve **124** includes a spring **128**, a spring follower **130**, a diaphragm **132** and a sealing ring **134**. In the closed position, diaphragm **132** seats on sealing ring **134** as illustrated in Figure 19. When a lever like lever **46** is depressed, a pump similar to pump **J** sucks liquid upwardly causing the liquid to pass through the dip tube, through the riser tube and through conduit **123** into chamber **125**. When the force of the liquid is sufficient to overcome the force of spring **128**, diaphragm **132** moves upwardly off the sealing ring **134** which in turn causes the liquid to pass through flow hole **136** formed in diaphragm **132** out openings **122** in upper valve housing member **120**. The liquid in turn passes through a plurality of openings **138** into pump head **30**. Openings **138** communicate with passageway **140** allowing liquid to pass through passageway **140** of pump head **30** and out opening **110**. The liquid then enters reservoir **26** through openings **142** forcing chilled water stored in reservoir **26** to ultimately pass upwardly through reservoir tube **28**,through chamber **18**, through tube **12** and through nozzle **14**. When the lever is released, the pump deactivates ceasing the flow of liquid from the container which allows spring **128** to reseat diaphragm **132** on sealing ring **134** as shown in Figure 19. When the sealing valve assembly **108** is in the position illustrated in Figure 19, liquid in reservoir **26** cannot flow back through pump head **30** into chamber **125**.

The non-return valve **124** is designed similar to non-return valve **58** to minimize the pressure drop across the non-return valve to prevent the non-return valve from adversely affecting the flow of liquid from the container to reservoir **26**.

The pressure relief valve **126** includes a sealing element **144** and a spring **146**. When in the position shown in Figure 19, sealing element **144** seals the lower end of vertically extending

passageway **148** formed in sealing ring **134**. Should the volume of the liquid upstream of valve assembly **108** increase beyond a predetermined maximum volume, the upstream liquid will exert a downward force on sealing element **144** which in turn opens the lower end of passageway **148** allowing upstream liquid to pass downwardly though opening **112** formed in plate **109** into annular conduit **149** preferably formed as one piece with plate **109**. The liquid then passes through passageway **148**, through openings **150**, through chamber **125** and through conduit **123** in route to the liquid storage container. Once a sufficient amount of upstream liquid has returned to the container, the force of spring **146** will return sealing element **144** to the closed position preventing any additional upstream liquid from flowing back into the container. It should be noted that when liquid flows upwardly from container **E** in route to reservoir **26** the liquid does not pass through pressure relief valve **126** as the sealing element **144** is in the position shown in Figure 19 to close off passageway **148**. Sealing ring **134** includes openings similar to the openings in sealing ring **68** shown in Figure 10 to allow liquid to flow from lower chamber **125** through opening **136** formed in diaphragm **132**. One condition that could cause pressure relief valve to open is where a portion of the liquid in reservoir **26** freezes causing an increase in the effective volume of the liquid upstream of valve assembly **108**. Without the pressure relief valve, one or more components of the liquid dispenser could be irreparably damaged. As is readily appreciated from the above description, when one or more conditions exist which cause sealing element **144** to overcome the force of spring **146**, upstream liquid flows back into the container through valve assembly **108** without passing through pump head **30**. In fact, liquid cannot flow from pump head **30** to chamber **125**.

As seen in Figure 18, valve assembly **108** extends into lower chamber **16** of liquid manifold **10** and is secured thereto such that the valve assembly moves with liquid manifold **10**.

A self-priming pump similar to self-priming pump **J** can be operably connected to pump head **30**. The liquid transport assembly **K** can be readily replaced in a manner similar to liquid transport assembly **H.**

While this invention has been described as having a preferred design, it is understood that the preferred design can be further modified or adapted following in general the principles of the invention and including but not limited to such departures from the present invention as come within the known or customary practice in the art to which the invention pertains. The claims are not limited to the preferred embodiment and have been written to preclude such a narrow construction using the principles of claim differentiation.

WE CLAIM:

1. An apparatus for dispensing a liquid from a liquid storage container operably associated with the apparatus for dispensing a liquid, said apparatus comprising:

(a) a main housing having a dispensing location at which liquid from a liquid storage container is dispensed and a storage location for storing said liquid storage container, said dispensing location being disposed above at least a portion of said storage location;

(b) a reservoir disposed in said main housing, said reservoir being configured to receive a liquid from said liquid storage container prior to said liquid being dispensed from said main housing; and,

(c) a removable manifold disposed in said main housing below a cover of said main housing wherein said cover is moveable between a closed position and an open position to allow an individual to remove said removable manifold from said main housing when said cover is in the open position, said removable manifold being operably connected to said reservoir and said liquid storage container for conveying liquid between said reservoir and said liquid storage container, said removable manifold being further operably connected to said dispensing location to convey a liquid from said reservoir towards said dispensing location, said removable manifold including a liquid manifold, a valve assembly and a pump head, said removable manifold being configured such that liquid can flow in a first direction from said liquid storage container to said dispensing location and liquid that has already passed through the valve assembly but remains in the removable manifold can flow in a second direction back through said valve assembly and into the liquid storage container to prevent damage to one or more components of the liquid dispenser without passing through said pump head.

2. An apparatus as set forth in Claim 1, wherein:

(a) said liquid manifold is substantially rigid and includes at least an upper chamber and a lower chamber.

3. An apparatus as set forth in Claim 2, wherein:

(a) said upper chamber and said lower chamber share a common wall portion.

4. An apparatus as set forth in Claim 3, wherein:

(a) a first portion of said pump head is disposed in said lower chamber of said removable manifold.

5. An apparatus as set forth in Claim 1, wherein:

(a) said valve assembly includes a valve housing for housing a non-return valve and a pressure relief valve.

6. An apparatus as set forth in Claim 5, wherein:

(a) at least a portion of said valve assembly is disposed in one of said upper chamber and said lower chamber of said removable manifold.

7. An apparatus as set forth in Claim 5, wherein:

(a) said non-return valve is located above said pressure relief valve.

8. An apparatus as set forth in Claim 7, wherein:

(a) said pressure relief valve is configured to permit liquid to return to said liquid storage container without passing through said pump head.

9. An apparatus for a liquid dispenser to convey a liquid between a liquid storage container and a dispensing location of the liquid dispenser, said apparatus comprising:

(a) a removable manifold configured to be readily installed in and removed from the

liquid dispenser having a liquid storage container to permit the removable manifold to be readily removed from the liquid dispenser, said removable manifold including a liquid manifold, a valve assembly including a non-return valve and a pump head, said removable manifold being configured such that liquid can flow in a first direction from the liquid storage container of the liquid dispenser through said removable manifold including through said valve assembly to permit a liquid to be dispensed from the liquid dispenser; and,

(b) said pump head being configured to be operably connected to a drive motor disposed in the liquid dispenser when said removable manifold is in an operating position, said removable manifold further being configured such that upon removal of said removable manifold said drive motor remains in the liquid dispenser.

10. An apparatus as set forth in Claim 9, wherein:

(a) said valve assembly includes a valve housing for housing said non-return valve and a pressure relief valve, wherein said non-return valve is disposed above said pressure relief valve and said pressure relief valve is configured to permit liquid that has already passed through the valve assembly but remains in the liquid manifold to return to the liquid storage container without passing through said pump head should the volume of liquid that has already passed through the valve assembly but remains in the liquid manifold exceed a predetermined capacity.

11. An apparatus as set forth in Claim 1, wherein:

(a) said pump head is operably connected to a drive motor disposed in said main housing, and said removable manifold is configured such that upon removable of said removable manifold said drive motor remains in said main housing.

12. An apparatus for a liquid dispenser to convey a liquid between a liquid storage container and a dispensing location of the liquid dispenser, said apparatus comprising:

(a) a removable manifold configured to be readily installed in and removed from the liquid dispenser, said removable manifold including a liquid manifold, a valve assembly and a pump head, said removable manifold being configured such that liquid can flow in a first direction through said removable manifold to permit a liquid to be dispensed from the liquid dispenser and liquid that has already passed through the valve assembly but remains in said removable manifold can flow in a second direction back through the valve assembly and into a liquid storage container to prevent damage to one or more components of the liquid dispenser.

13. An apparatus as set forth in Claim 12, wherein:

(a) said removable manifold is configured such that liquid flowing in the second direction cannot pass from said pump head to the liquid storage container.

14. An apparatus as set forth in Claim 13, wherein:

(a) said liquid manifold is substantially rigid and includes at least an upper chamber and a lower chamber.

15. An apparatus as set forth in Claim 14, wherein:

(a) said upper chamber and said lower chamber share a common wall portion.

16. An apparatus for dispensing a liquid from a liquid storage container operably associated with the apparatus for dispensing a liquid, said apparatus comprising:

(a) a removable manifold including a reservoir, a reservoir dip tube, a first section and a second section, said removable manifold further including a liquid dispensing conduit for dispensing a liquid from a bottom-loaded liquid dispenser when said removable manifold is

installed in an operating position in the bottom-loaded liquid dispenser, an outlet of said first section being connected to said liquid dispensing conduit and an inlet of said first section being connected to said reservoir dip tube, said first section being configured to convey a liquid in a first flow path from said reservoir dip tube into said liquid dispensing conduit, at least a portion of said first flow path is a substantially horizontal flow path, said second section of said removable manifold including an inlet for receiving a liquid from the liquid storage container of the bottom-loaded liquid dispenser stored below said removable manifold when said removable manifold is installed in an operating position in the bottom-loaded liquid dispenser, said second section being configured to convey liquid from said liquid storage container to said reservoir in a second flow path, wherein at least a portion of said second flow path is a substantially horizontal flow path, and at least a portion of said first section being disposed above at least a portion of said second section.

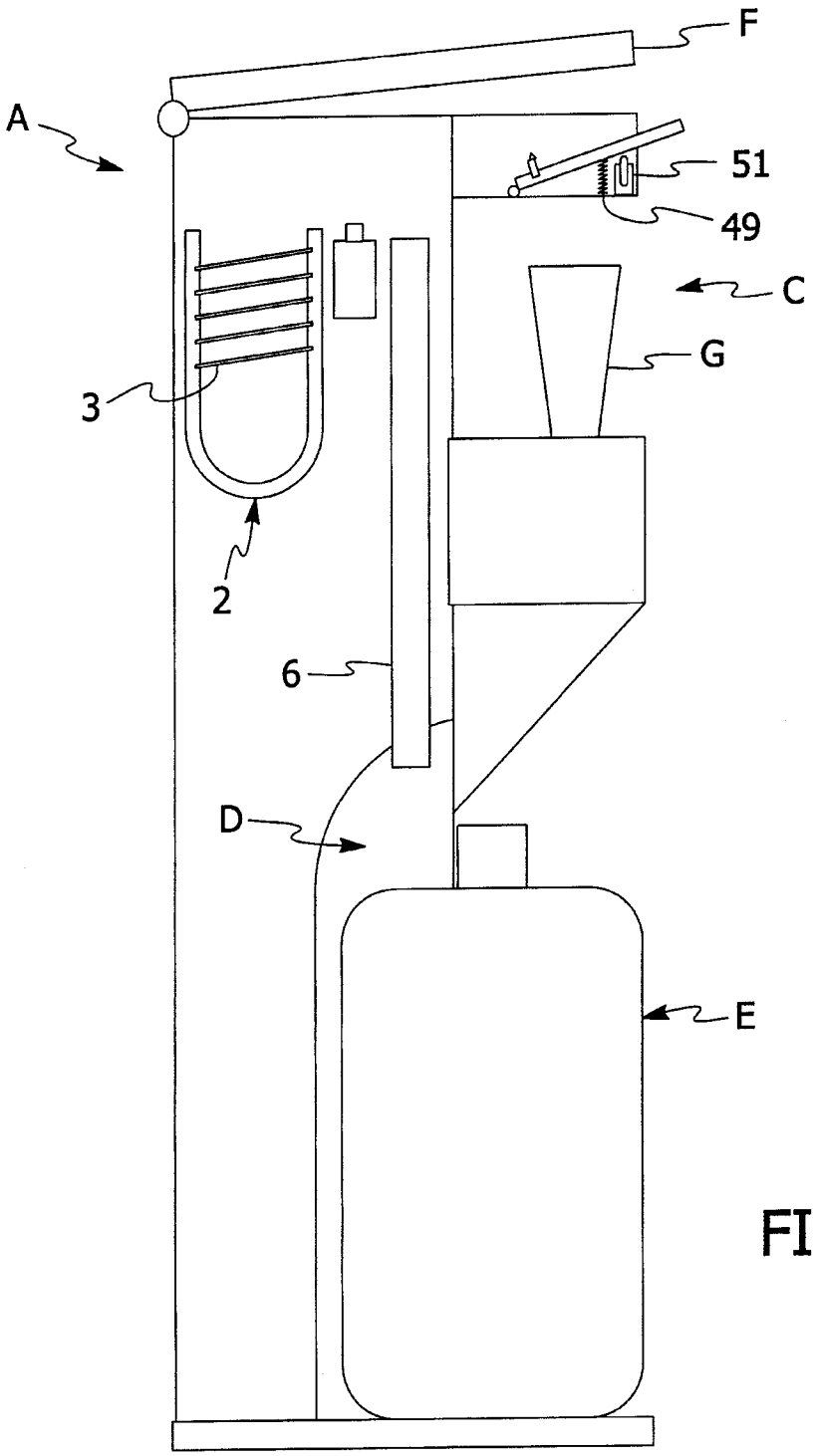

FIG. 1

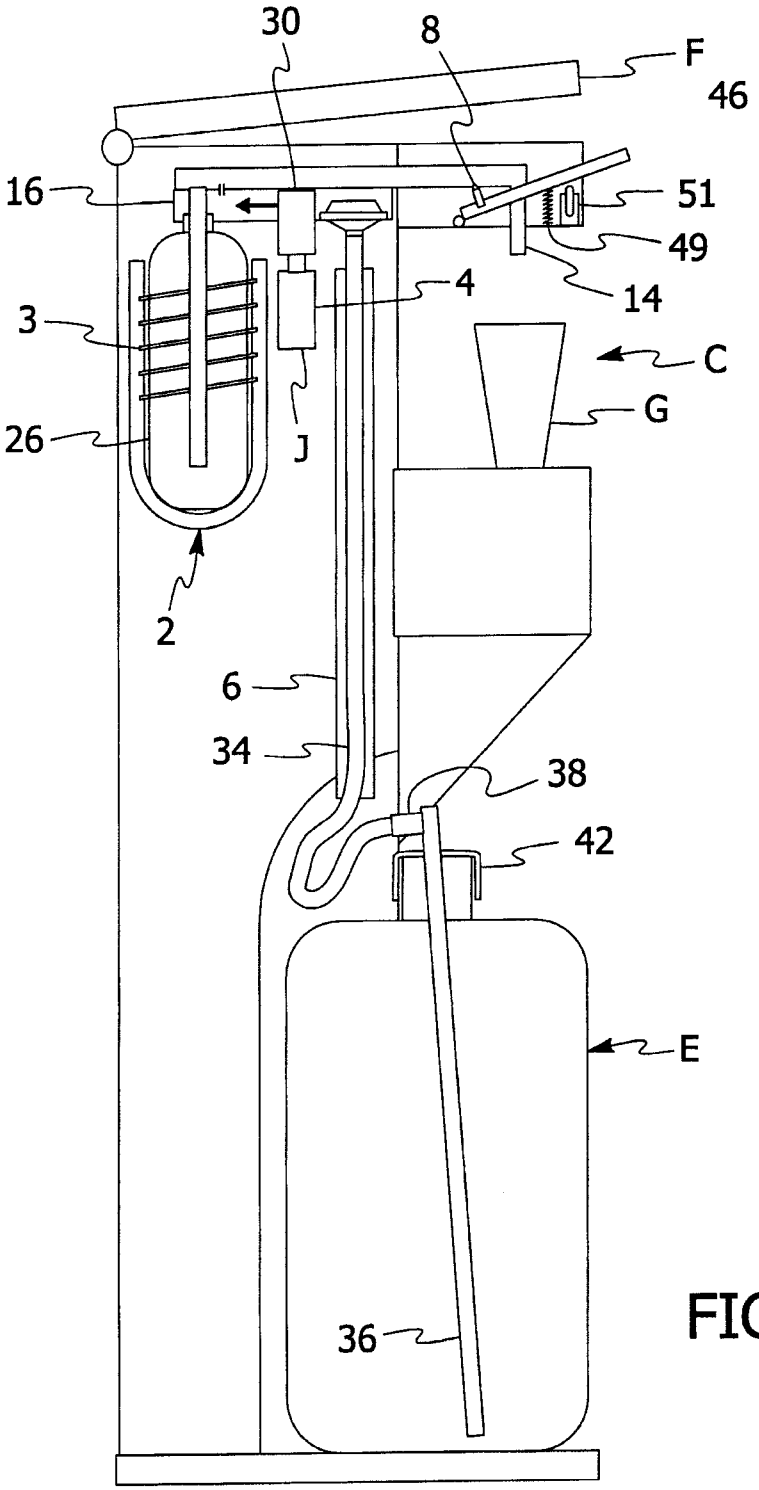

FIG. 2

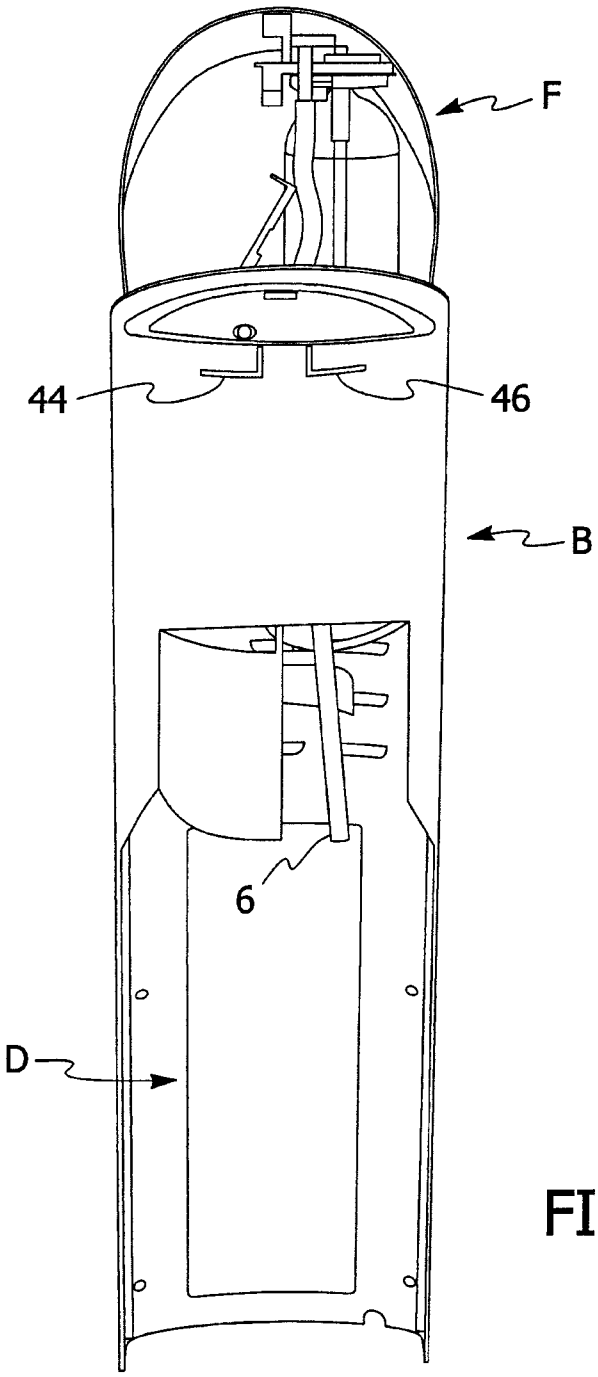

FIG. 3

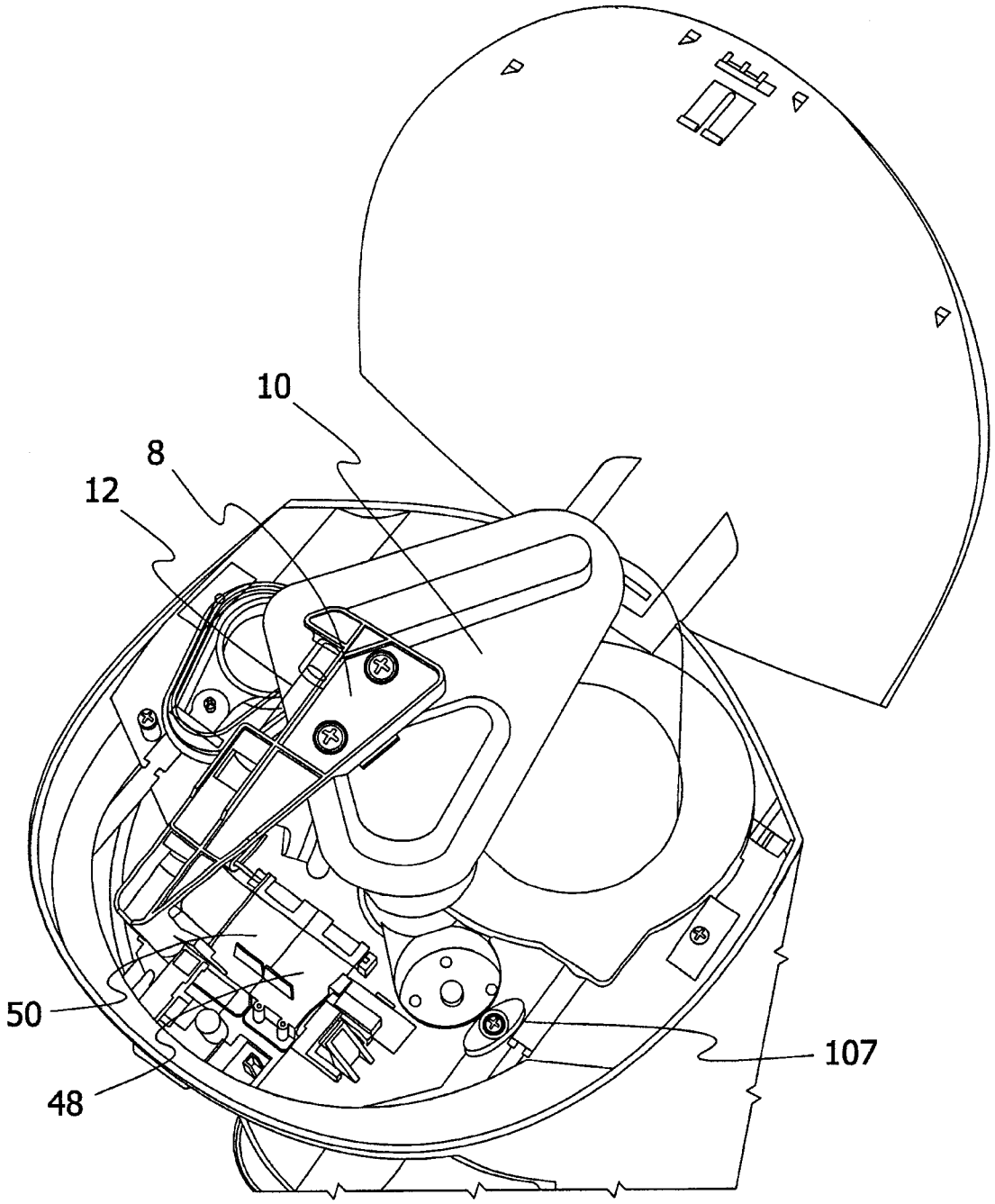

FIG. 4

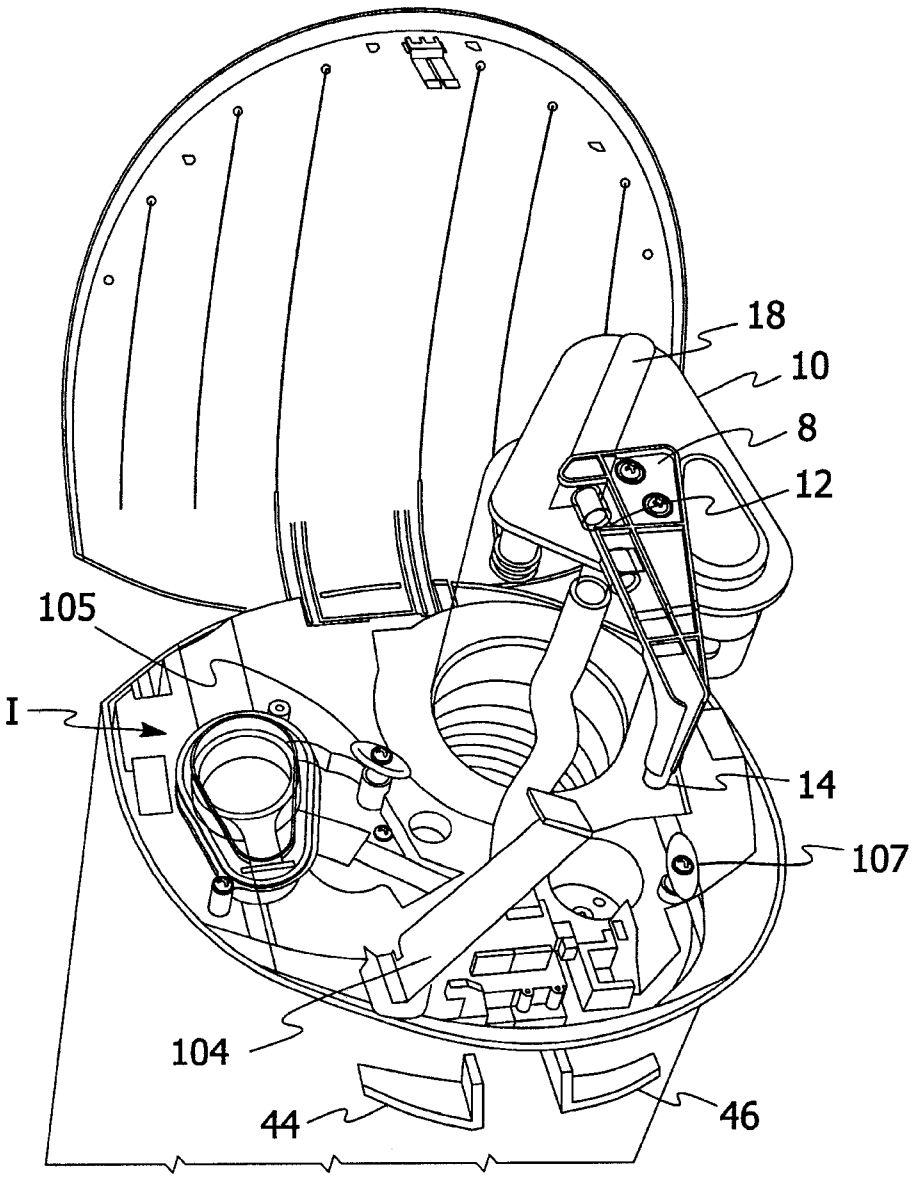

FIG. 5

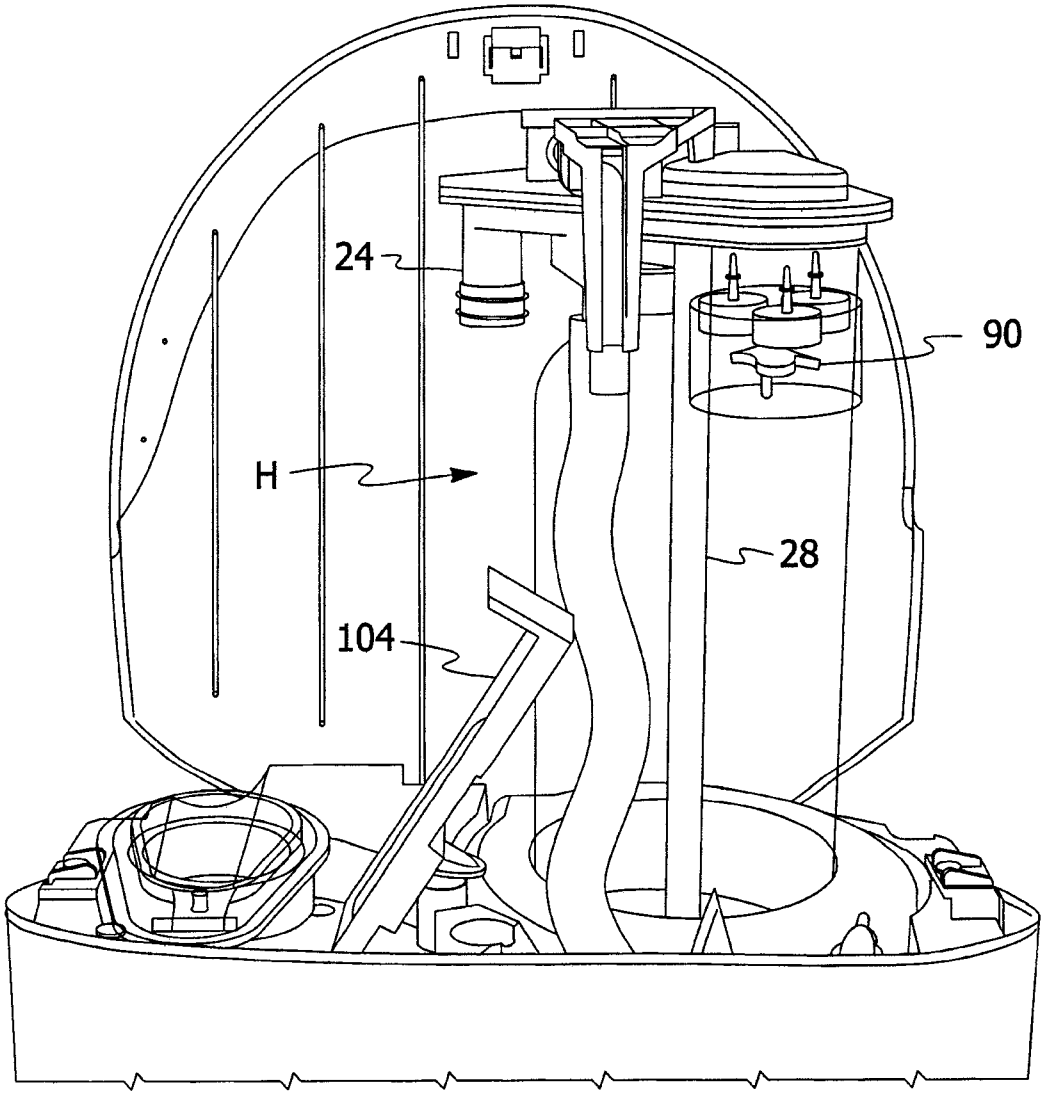

FIG. 6

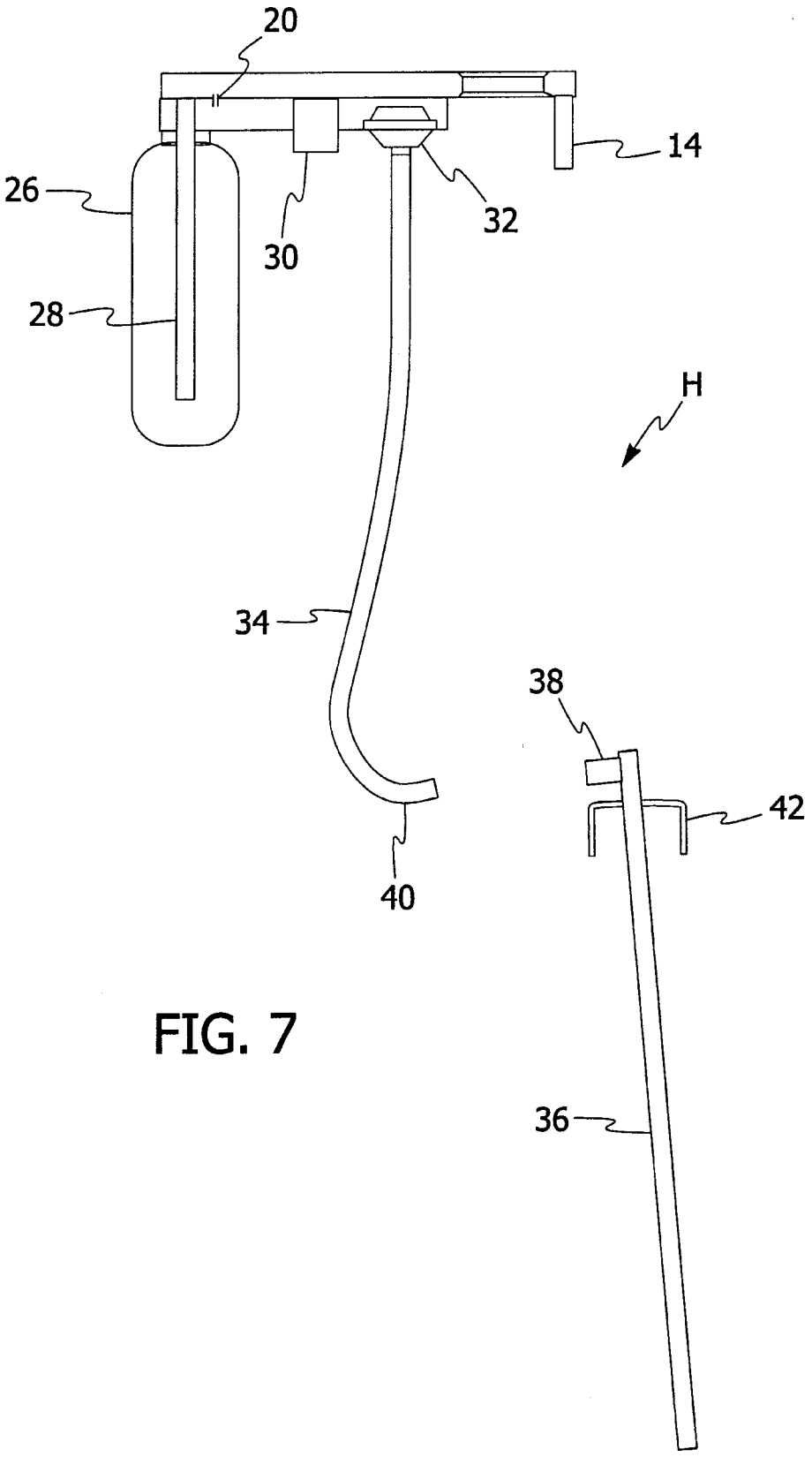

FIG. 7

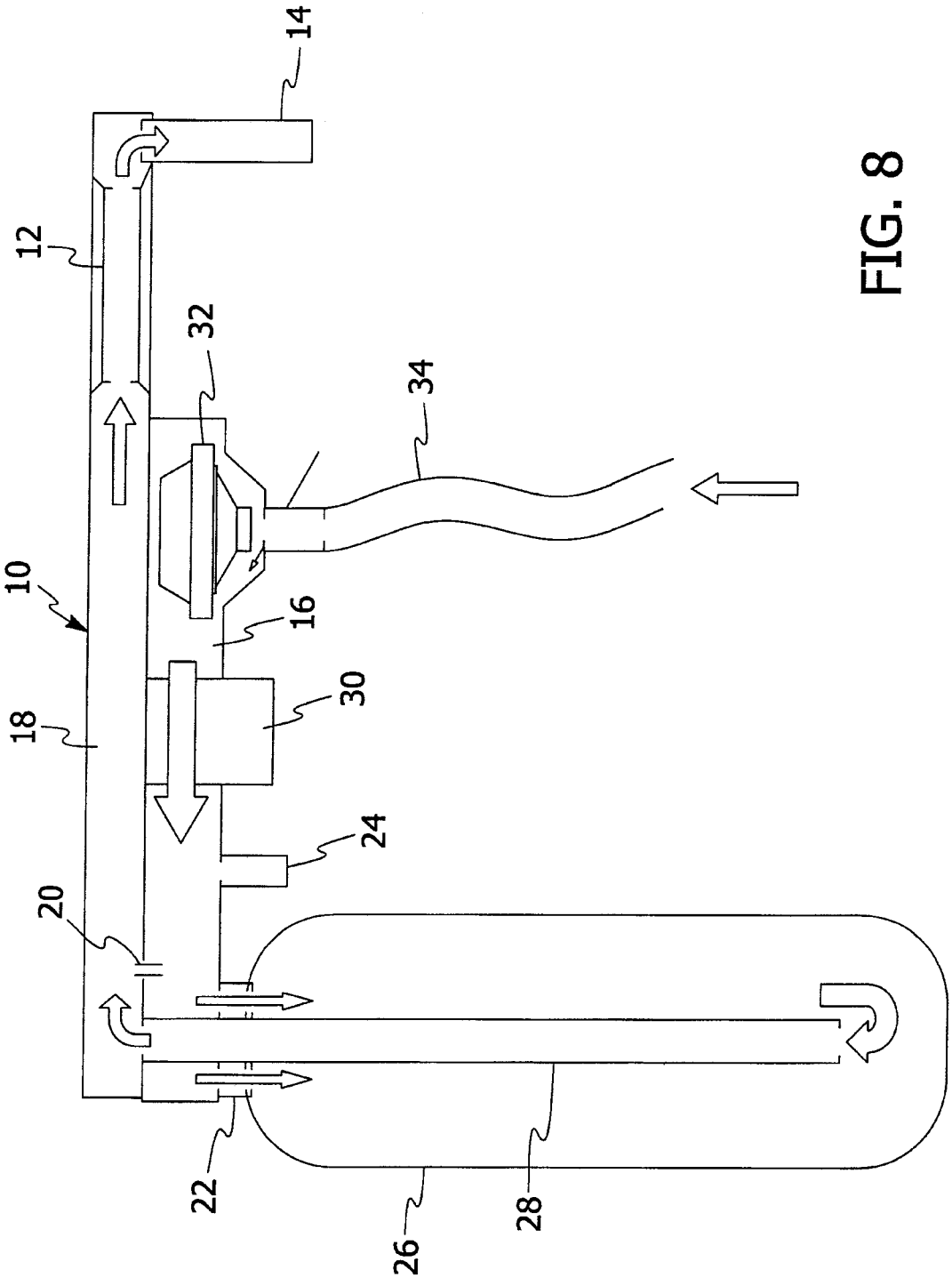

FIG. 8

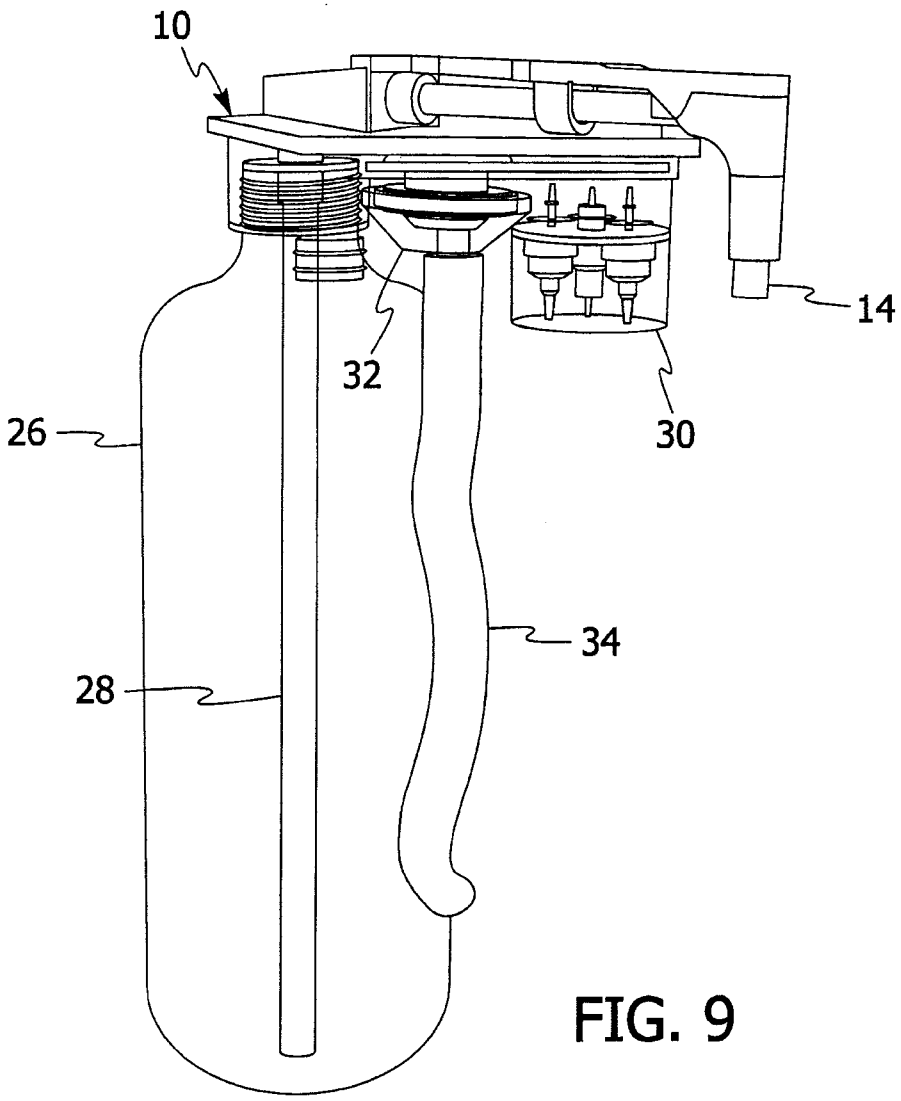

FIG. 9

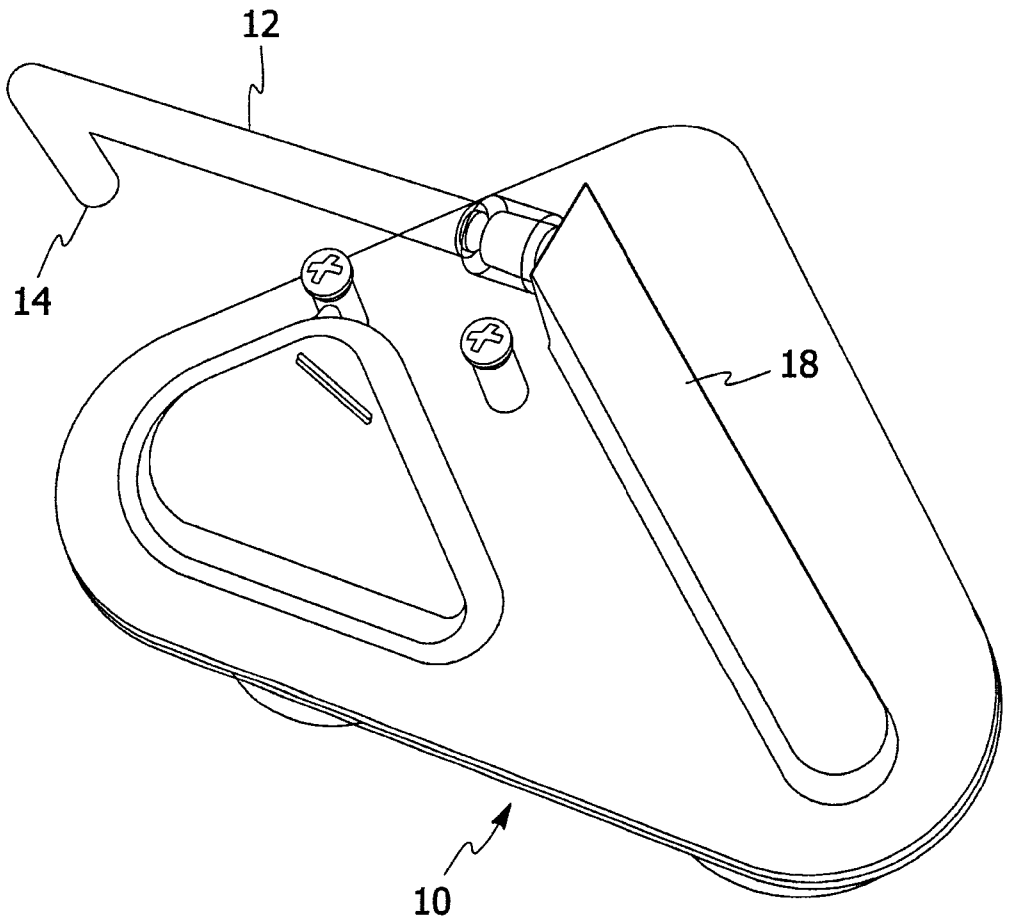

FIG. 9A

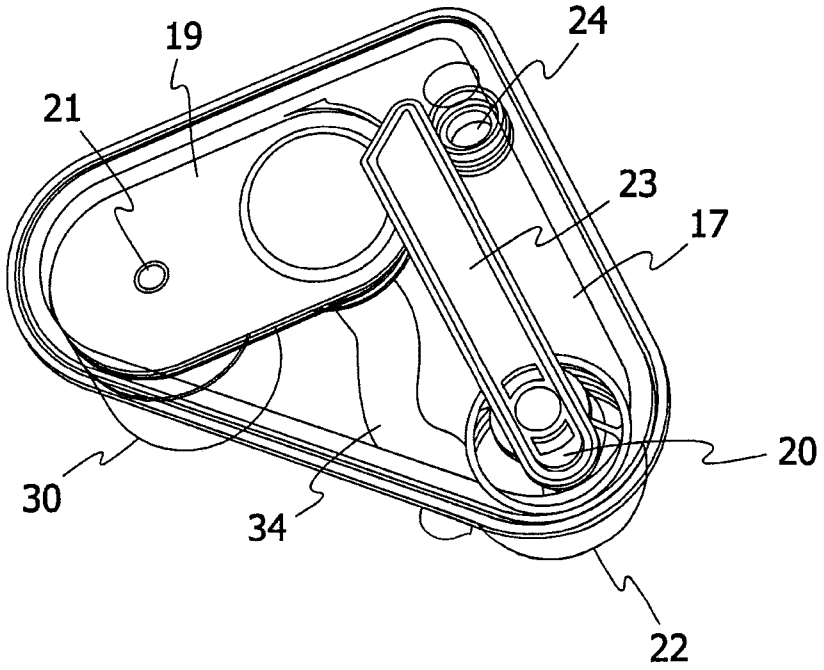

FIG. 9B

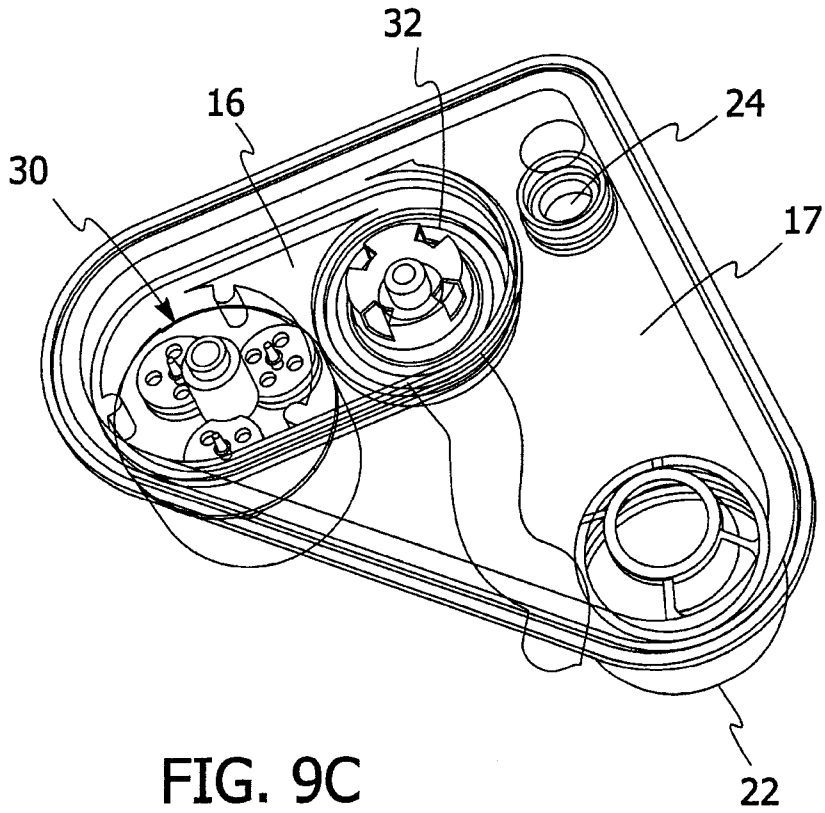

FIG. 9C

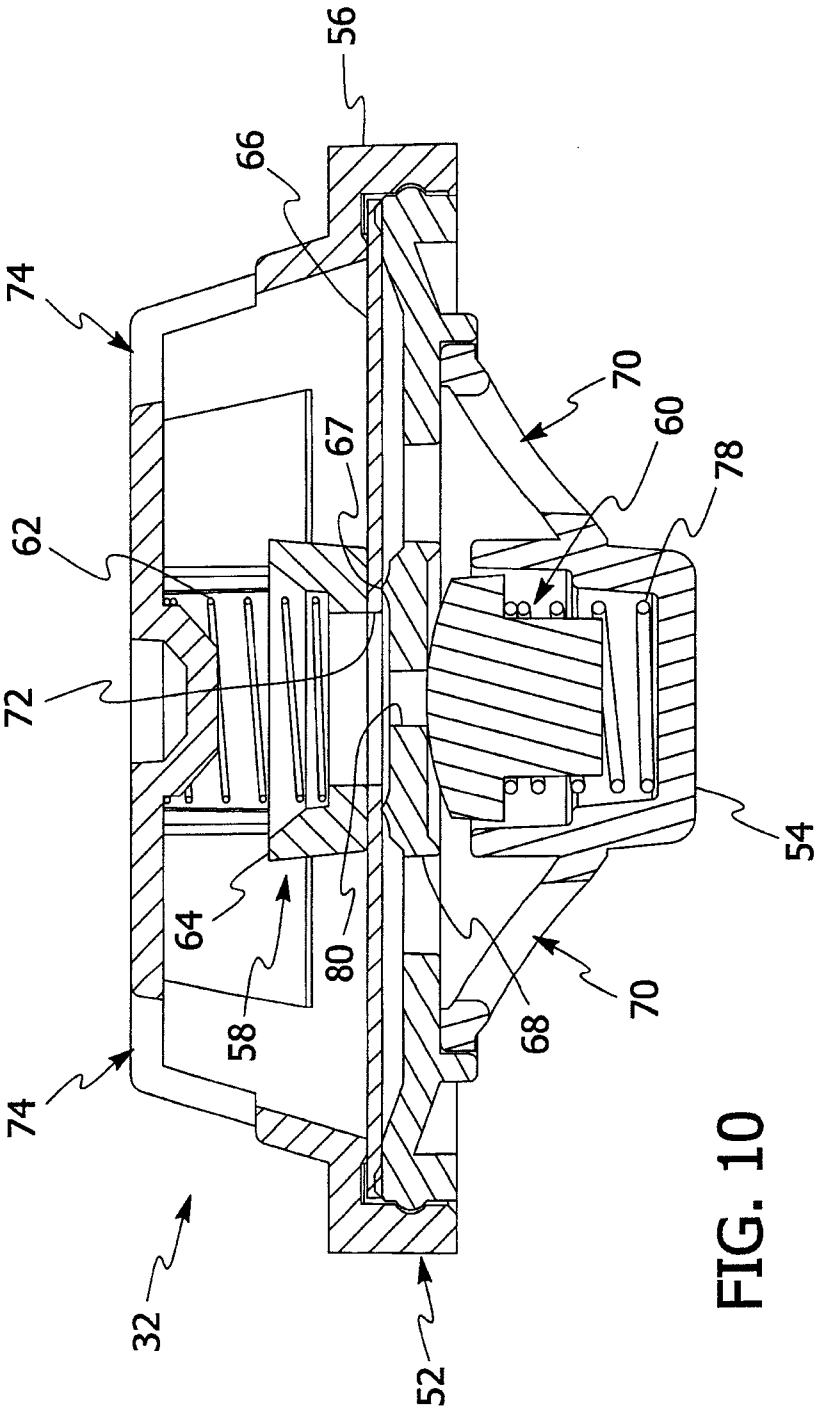

FIG. 10

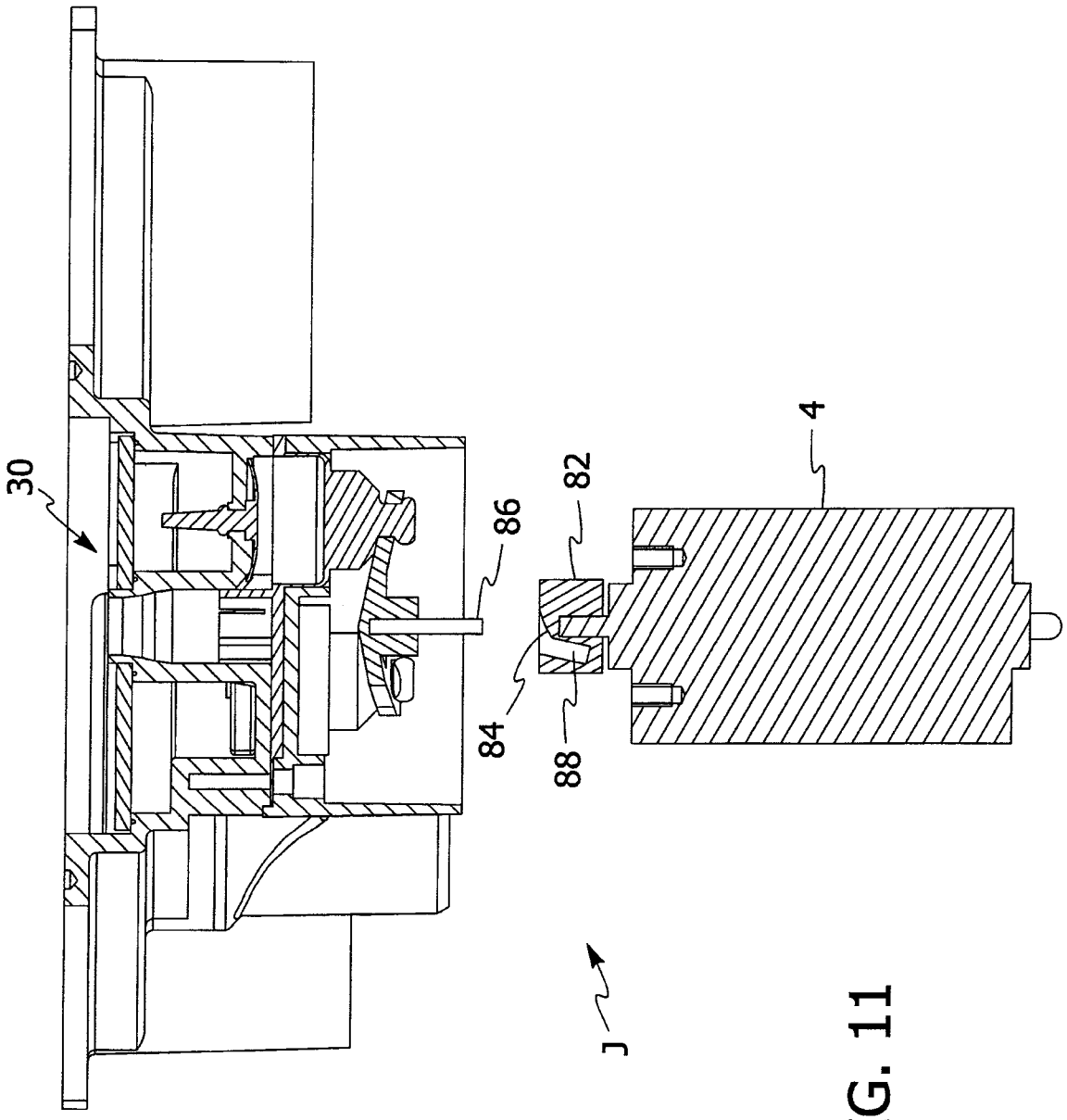

FIG. 11

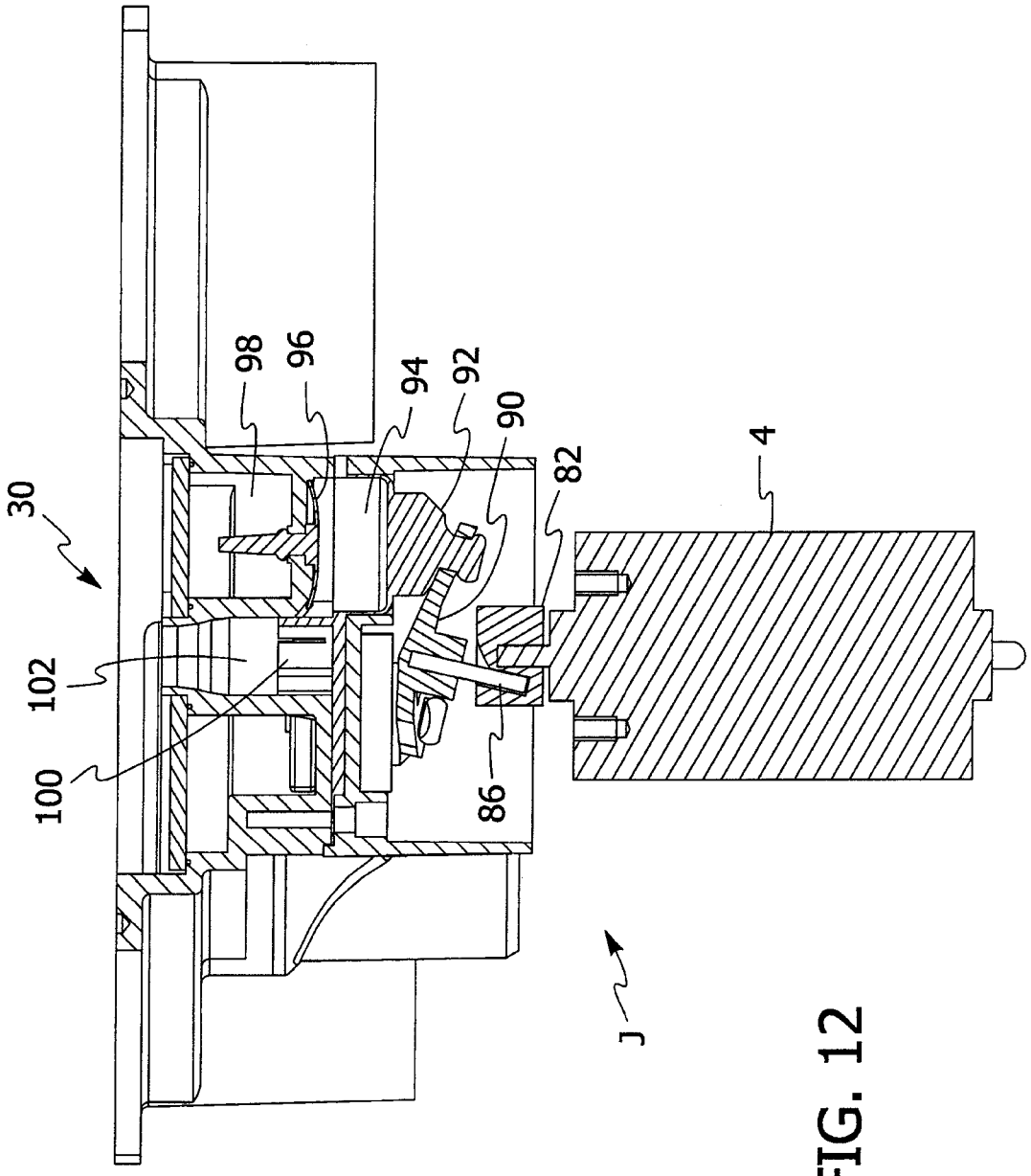

FIG. 12

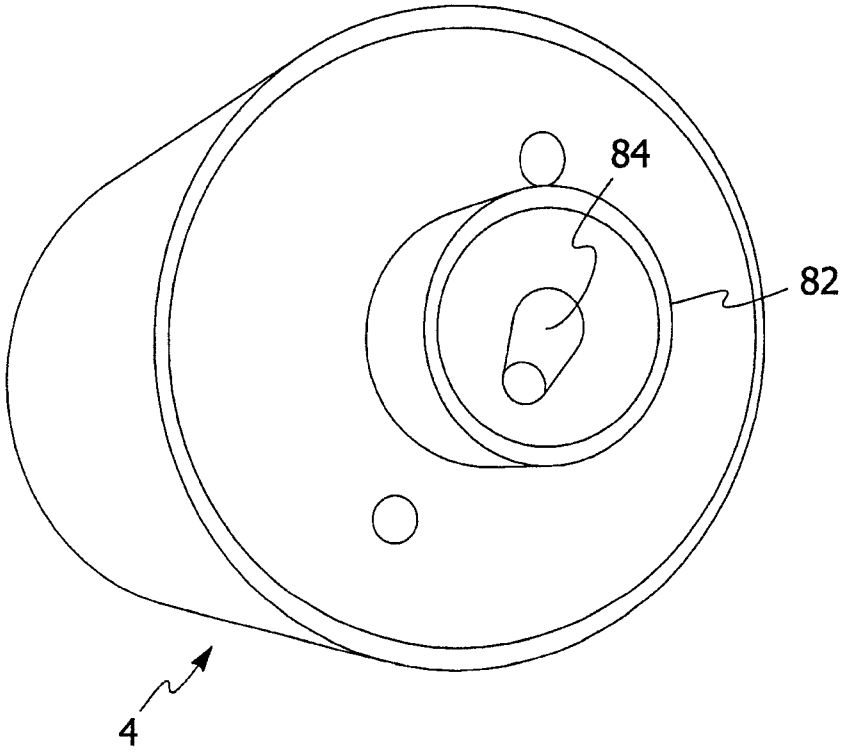

FIG. 13

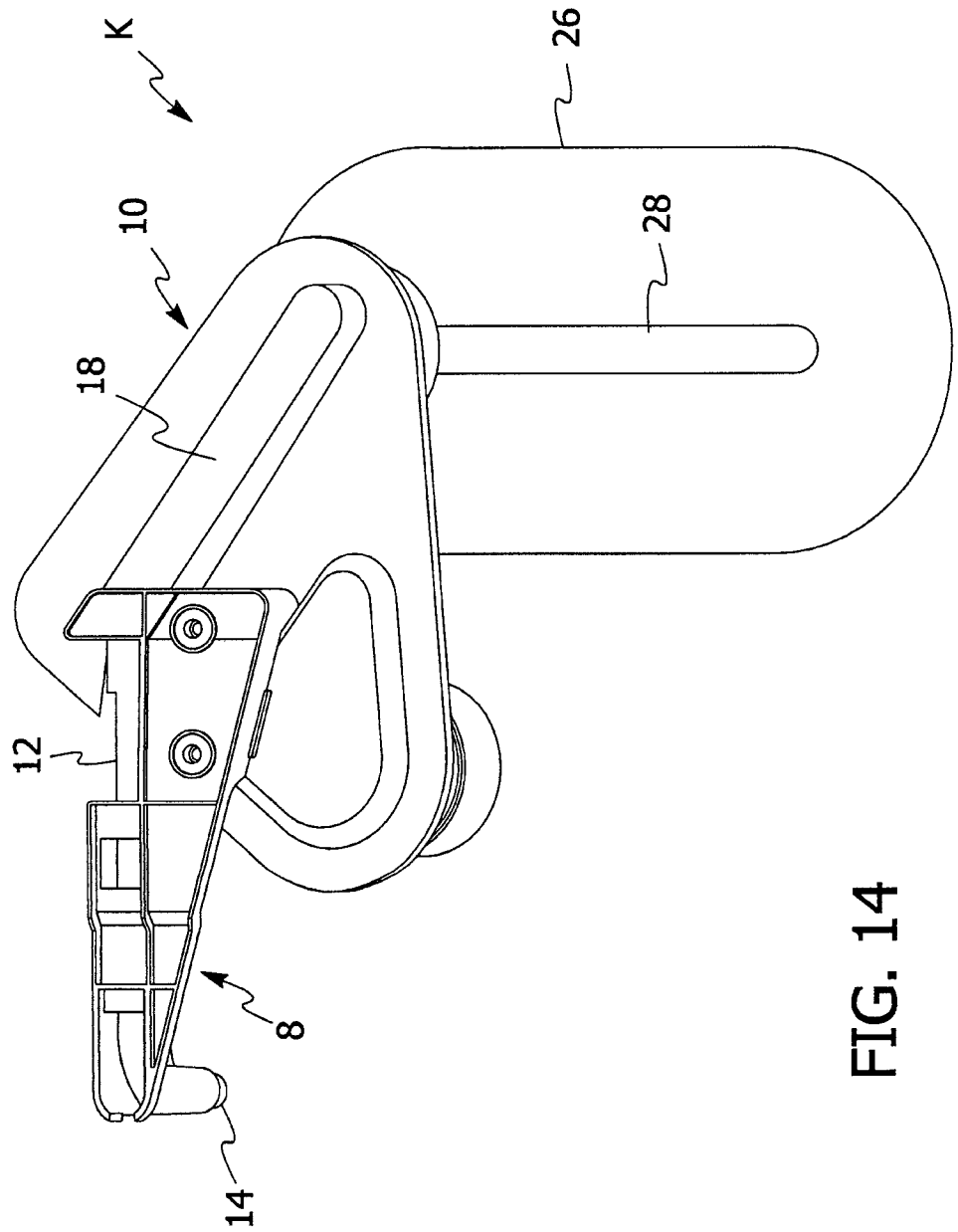

FIG. 14

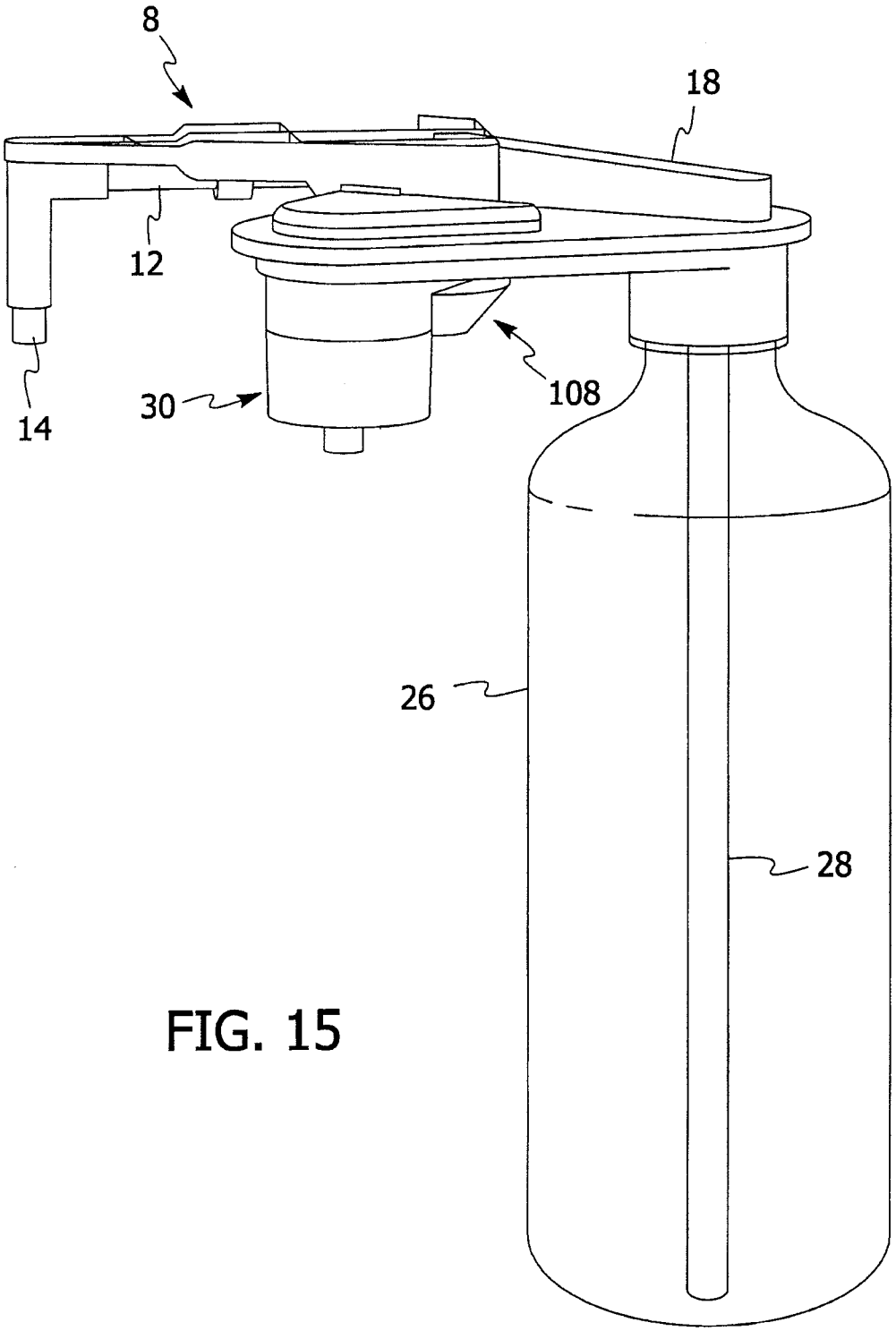

FIG. 15

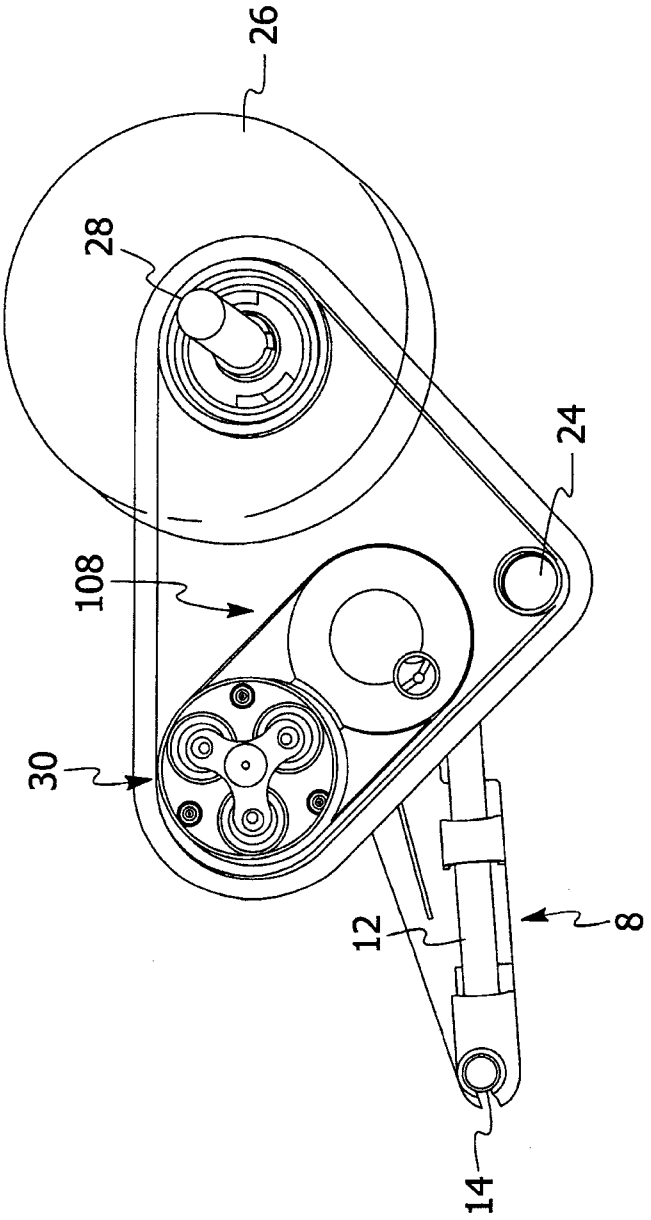

FIG. 16

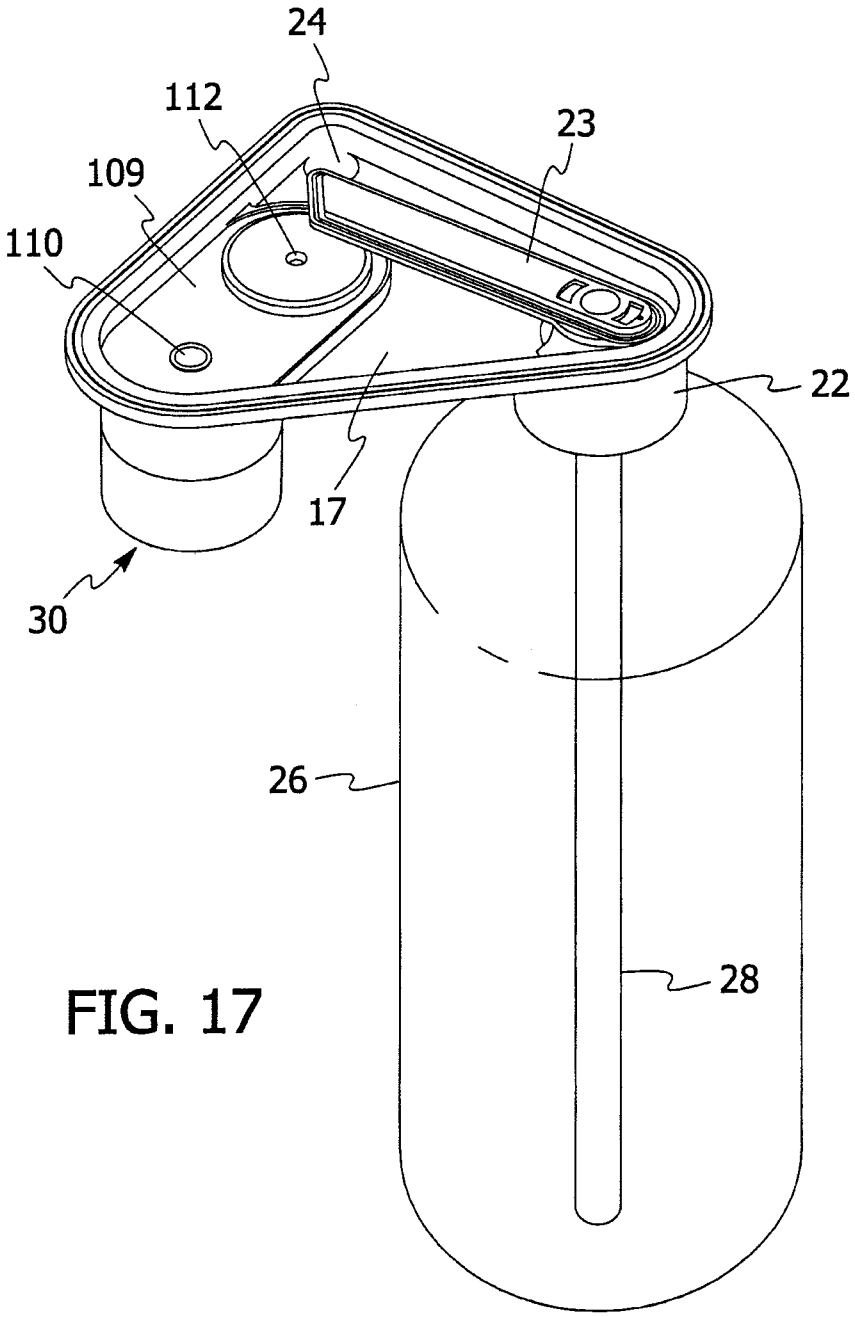

FIG. 17

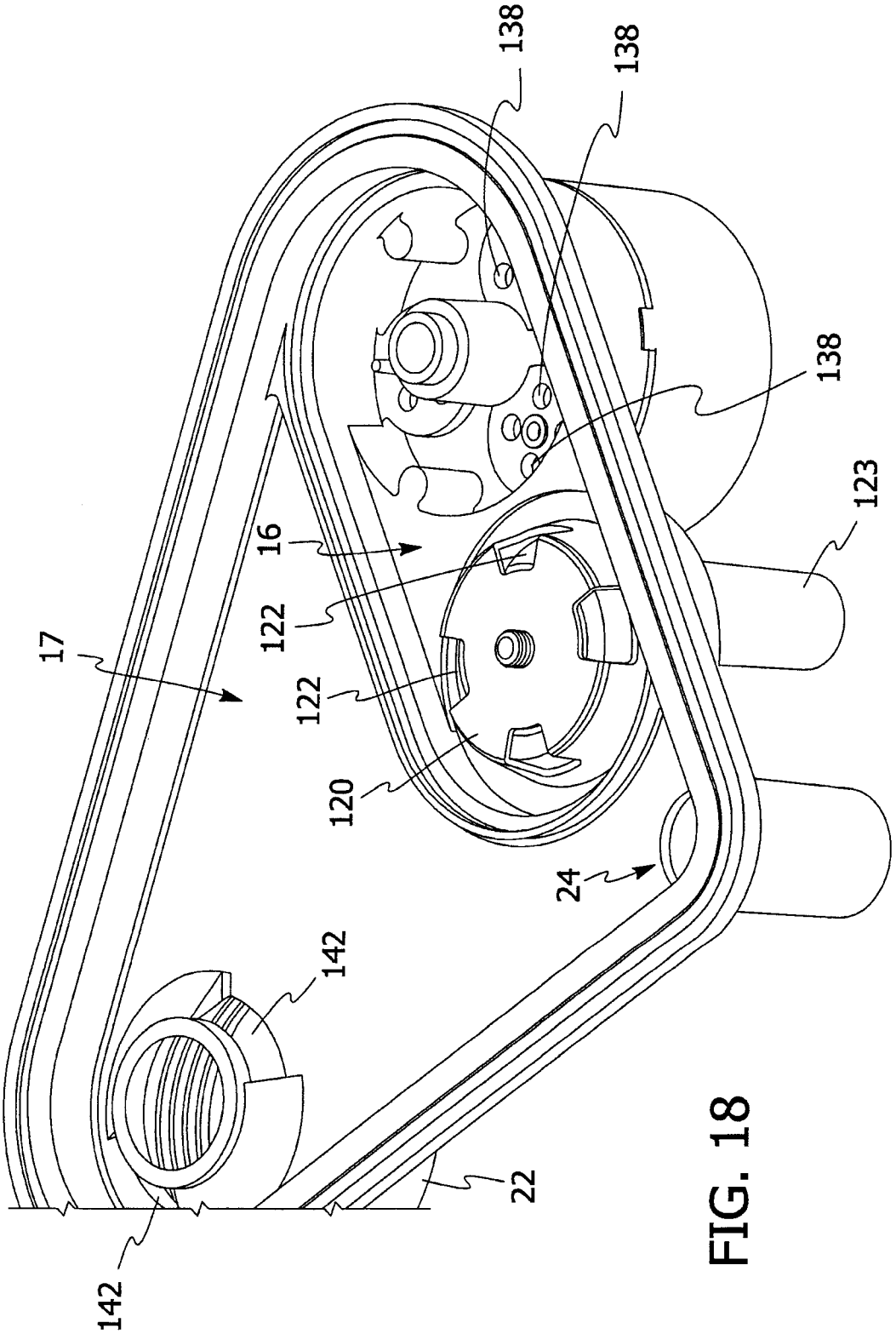

FIG. 18

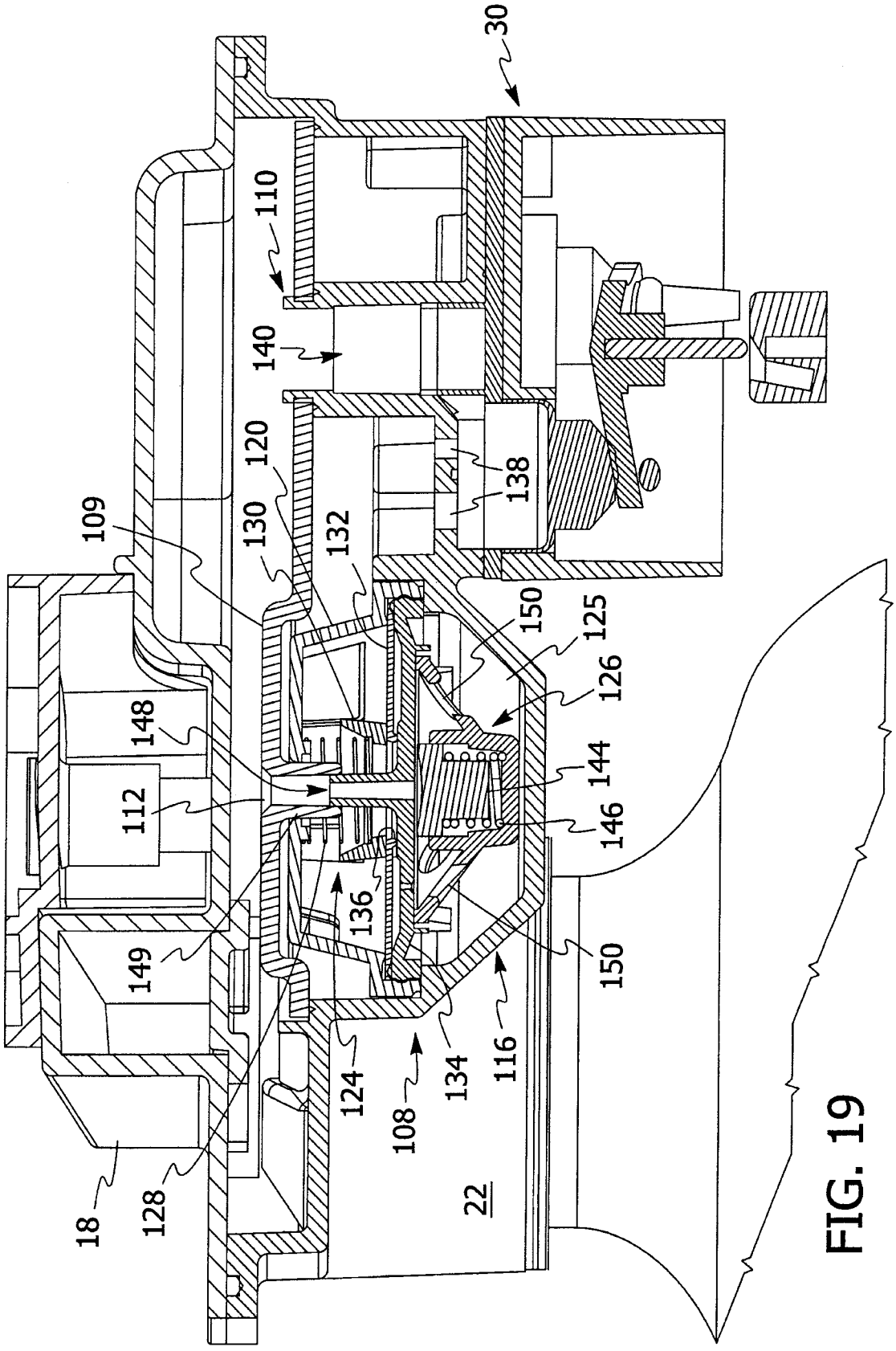
30
110
140
120
138
109
130
132
150
125
126
148
144
112
146
136
149
150
116
124
134
108
128
18
22

FIG. 19

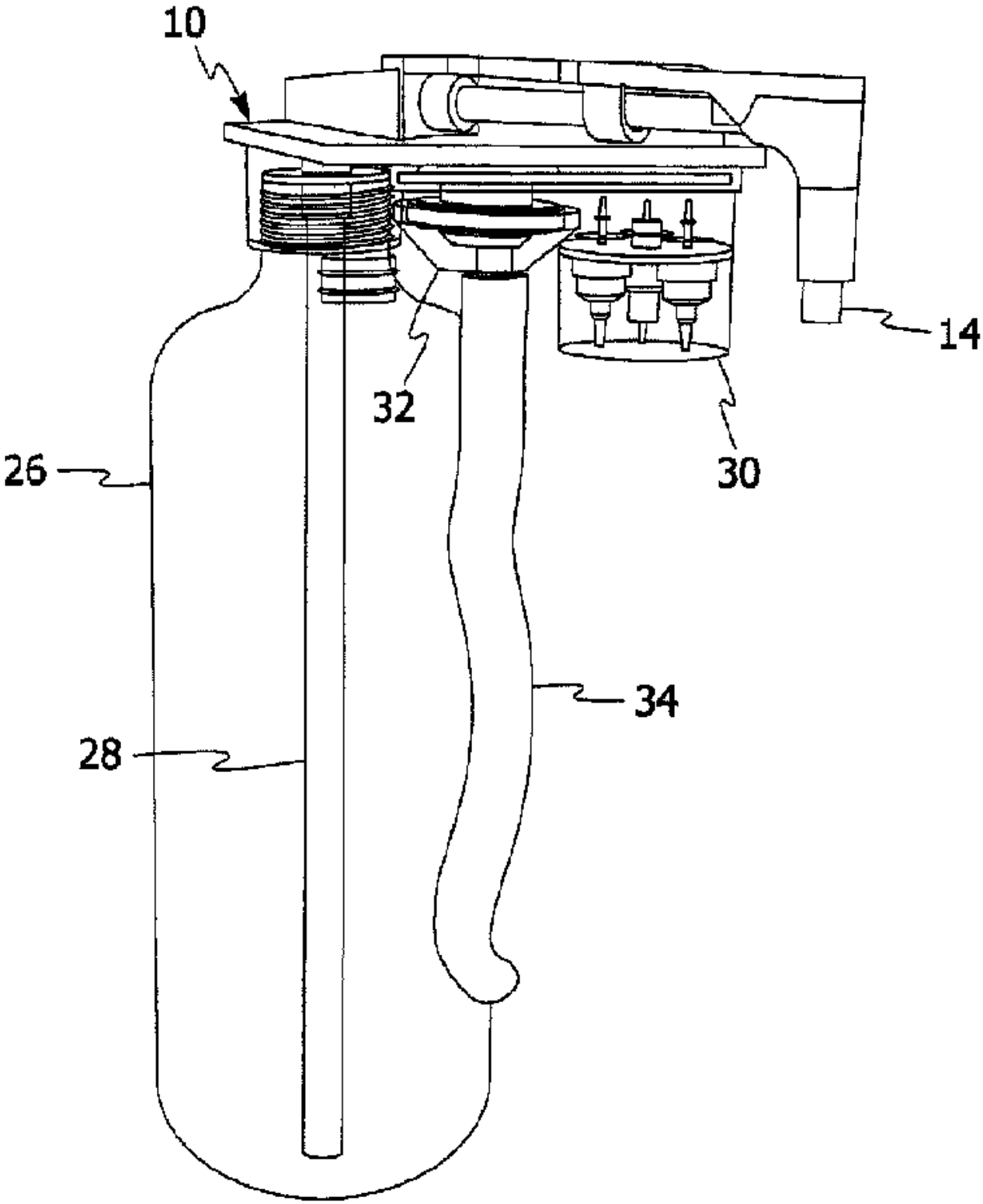
10
14
32
30
26
34
28