Nov. 6, 1923. 1,472,953

W. BAMBER

DISPLAY BOX

Filed Aug. 7, 1922 2 Sheets-Sheet 1

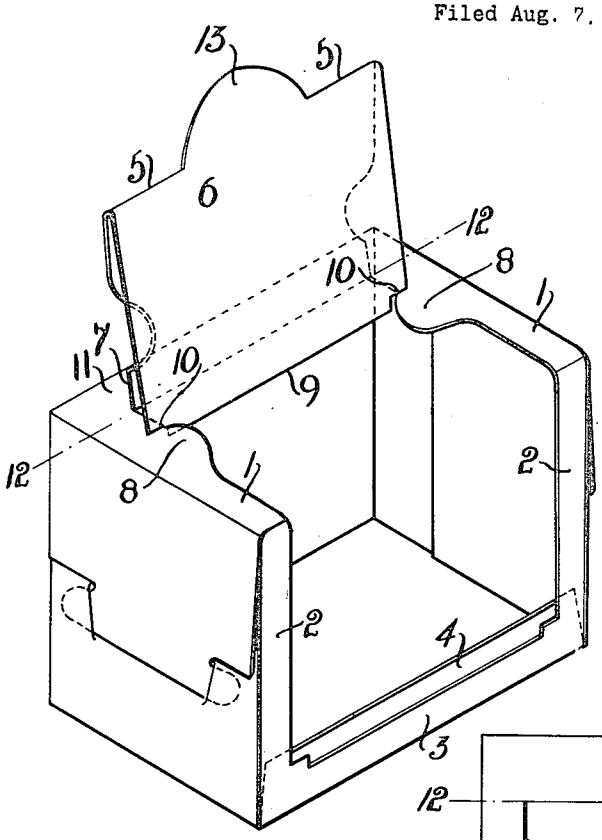

Fig. 1.

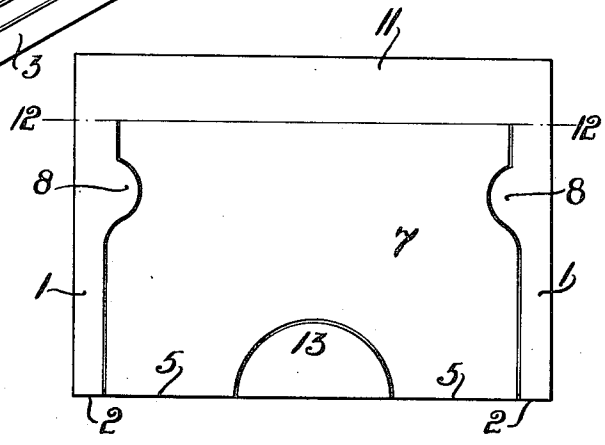

Fig. 2.

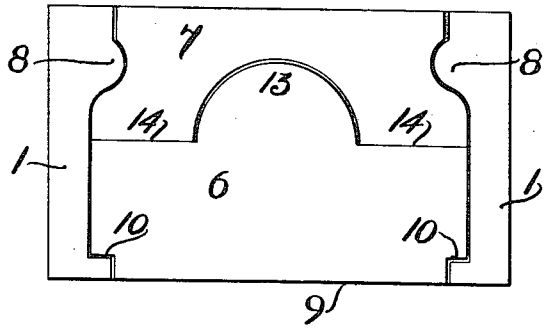

Fig. 6.

W. BAMBER.
Inventor.
per: Dorsey and Cole
Attorneys.

Nov. 6, 1923. 1,472,953

W. BAMBER

DISPLAY BOX

Filed Aug. 7, 1922 2 Sheets-Sheet 2

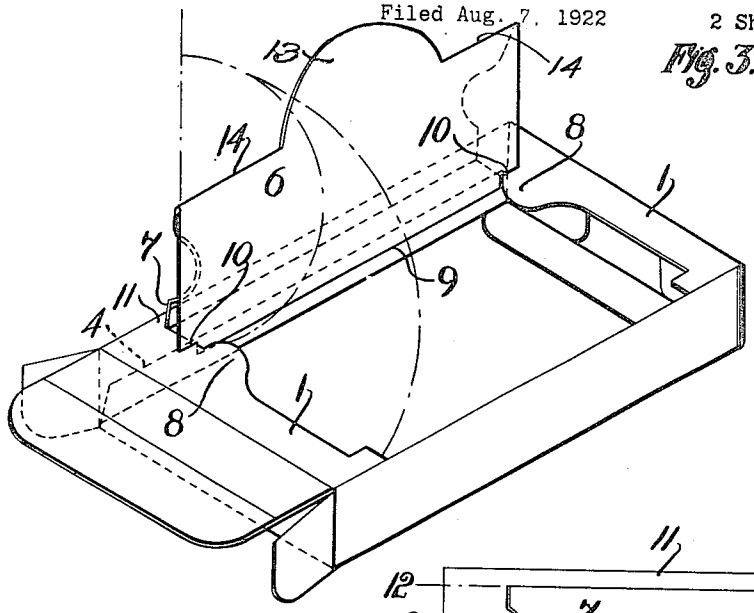

Fig. 3.

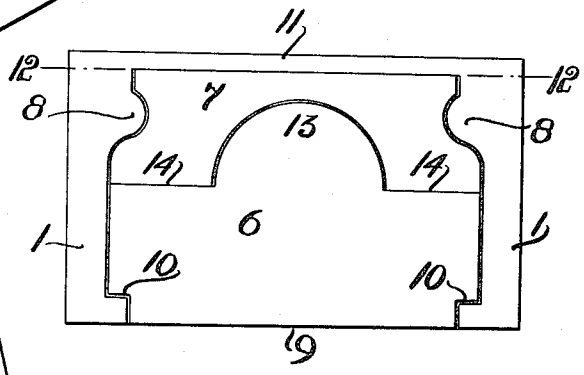

Fig. 4.

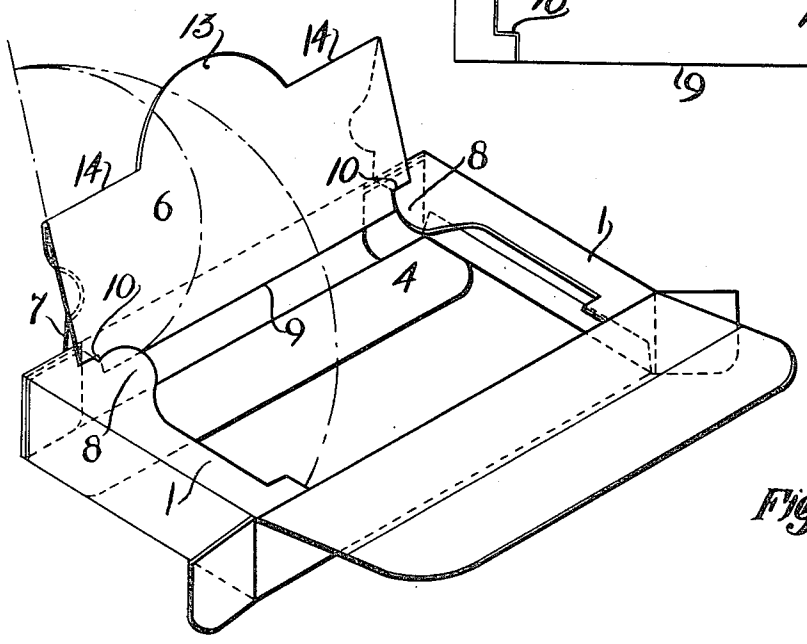

Fig. 5.

W. BAMBER
Inventor and Co.
per: Dorsey
Attorney.

Patented Nov. 6, 1923. 1,472,953

UNITED STATES PATENT OFFICE.

WILLIAM BAMBER, OF SUTTON, ENGLAND.

DISPLAY BOX.

Application filed August 7, 1922. Serial No. 580,154.

To all whom it may concern:

Be it known that I, WILLIAM BAMBER, a subject of the King of Great Britain, residing at Sutton, in the county of Surrey, England, have invented certain new and useful Improvements in Display Boxes, of which the following is a specification.

This invention relates to improvements in boxes of cardboard or the like and refers particularly to the construction of a folding box which is to be used also for displaying an advertisement.

A main object of the invention is to provide a box which is available for display when received by the user, and in which the printing of the blank can be carried out on one side only of the cardboard or blank which is to be employed.

A further object is to save the amount of board required, and still another object is to allow of a display which can be associated with what is known in the trade as a cut-out figure.

In the accompanying drawings are shown some preferred forms of construction embodying my invention,

Figs. 1 and 2 showing a pictorial and plan view respectively of a box in which the display flap is cut from the top and front side of the box; Figs. 3 and 4 are similar views to Figs. 1 and 2 respectively, showing a construction wherein the display flap is cut from the top of the box only and is hinged to a ledge formed at the back of the top of the box; and Figs. 5 and 6 show a modified construction in pictorial and plan view respectively, wherein the display ledge is cut from the top of the box and is hinged to the rear wall thereof.

In the several figures like reference numerals indicate the same or similar parts.

Referring generally to the figures, the constructions show the front, the top, the side, the rear and bottom walls as formed from a single piece of material, which is scored to be folded to form the box, the ends of the material being connected by a fastening flap formed on one end of the blank.

In Figs. 1 and 2 the sides of the box are formed by closure flaps of known formation, two flaps being formed on each side of the blank in each area constituting a wall of the box, as is well understood in the art, the outermost pair of flaps being provided with locking means, preferably of the tongue and slot type.

Now in order to provide a display flap according to the present invention and so that it may be folded upon itself and have a width narrower than that of the top of the box, that part of the blank forming the front and top walls of the box is cut along two longitudinal lines and transversely to connect the lines at one end, whereon the display flap will be freed from the blank, but will be hinged to the blank in a transverse line parallel to the front wall and connecting the other ends of the longitudinal cuts, the longitudinal cuts being so arranged as to leave margins on each side of the blank which is cut so that ledges or flanges, such as indicated by the numeral 1, are provided on each side of the top of the box and side pieces 2 for the front of the box, the transverse cut being made so as also to provide a bottom strip 3 for the front of the box, the ledges and parts 2 and 3 being integral with one another. In this construction the blank for the box is formed so that the fastening flap 4 is destined to connect the bottom to the front of the box, the fastening flap being preferably of a dimension of greater width than the bottom strip 3 of the front of the box. By such an arrangement, when the display flap is cut away and the fastening flap 4 is secured to the front of the box, a recessed bottom portion of the front is provided, which locates the free end of the display flap when not in use. The display flap being scored intermediately (during the manufacture of the box blank), as indicated at 5, it can be folded upon itself, as clearly indicated in Fig. 1, thereby providing a front and rear wall, indicated by the numerals 6 and 7 respectively, on each of which an advertisement may be displayed, so that when the display flap is folded upon itself for display, not only the contents of the box are visible, but also the advertisement on the flap, while when the display flap is not in use, it forms part of the walls of the box.

In order to secure the display flap in folded condition, the longitudinal cuts on the blank are made so as to form a tongue 8 on each ledge 1, and so that the ledge behind the tongue, i. e., between the tongue and the rear wall, is wider than on the other side of the tongue. Further, the cuts are made to provide re-entrant angles at the corners of the free edge 9 of the flap, thereby forming shoulders 10 at such corners. The flap may then be folded back about the scoring 5 un-

til the free edge 9 engages behind the tongues 8 aforesaid, the shoulders 10 lying on the edge and co-operating to retain the display flap in the folded position.

In the construction shown, the longitudinal cuts which are made to form the display flap are shown limited so as to leave a back ledge 11 at the rear of the top of the box so that the hinge axis of the display flap is along the line 12—12, as clearly indicated in the figures, but instead of providing this back ledge, it will be obvious that the longitudinal cuts may extend wholly across that portion of the blank forming the top of the box so that the display flap is hinged at the top of the rear wall of the box.

The display flap is also cut about the transverse scoring 5 inwardly towards the rear wall and back again to the scoring 5, so as to obtain a figure which, by way of example, is shown as a small semi-circle, indicated by the numeral 13, so that when the display flap is folded back about the scoring 5, the cut portion of the wall 7 of the flap may remain in the plane of the wall 6, thereby silhouetting the figure portion 13 above the display flap.

In the construction shown in Figs. 3 and 4, the longitudinal cuts made to form the display flap are made only in that portion of the blank forming the top of the box, and as the scoring is not coincident with a junction of two walls of a box, the scoring need not extend wholly across the flap, as indicated by the lines 14—14, so that that part of the wall 7 within the cut portion remains rigid with the wall 6 and automatically with the folding of the flap the figure is silhouetted.

As shown in Figs. 1 and 2, the closure flaps are arranged on each side of the box for the introduction of the prescribed contents. Further, in this construction the fastening flap, again indicated by the numeral 4, is arranged to connect the bottom of the box to the rear wall, though its position is immaterial because the display flap does not extend over the front wall. The construction in Figs. 3 and 4 is similar to that shown in Figs. 1 and 2 with regard to the extent rearwardly of the box of the display flap, which, as in the former construction, is shown hinged to a back ledge 11.

Figs. 5 and 6 show a construction similar to that shown in Figs. 3 and 4, the modification consisting in extending the longitudinal cuts to that part of the blank forming the rear wall of the box, so that the display flap hinges on the top edge of the rear wall. The other constructions in so far as they refer to the essence of invention are similar to those referred to in Figs. 3 and 4, and need not be further described, while the closure flaps, instead of being at the sides of the box, are at the front and the rear.

In the construction shown in Figs. 5 and 6, the fastening flap 4 is shown connecting the rear wall to the bottom of the box.

It will be seen that there are some considerable advantages in the present invention. The blank need only be printed on one side and yet the display flap is available on the top when opened and with display printing on both the top and the front when not in use as a display flap, along with printing on any other panels, and since only one thickness of board for the body section (i. e., the four middle panels) is needed, a considerable saving of board may be effected as compared with the display boxes provided with a lid which are used at the present time.

Another material advantage is that board finished on one side only can be used with this invention, and since what are known as two-sided white boards have hitherto been used when printing on both sides is required, a material saving in expense is effected on this latter account. Further, the opening to the box for introduction of the contents may be arranged at the two ends or at the back and front when the display flap will be cut accordingly, the closure flaps being formed in the usual manner from the body of the blank.

I claim:

1. The combination, in a box, of a body portion, a hinged flap divided from the said body portion by a cut which follows a line of irregular form rendering the main body of the flap narrower than the width of the box, a small intermediate portion narrower still, and the extreme front and back sections of the flap of a width between the last two mentioned widths, a crease in the said flap whereby the folding front section of the flap will fit into the back section of the space from which it is cut and the intermediate portion will fix it in position.

2. The combination with a box comprising, bottom, front, back and side walls and closure flaps included in the said side walls, of a top wall constituted by a ledge at each side and an intermediate hinged display flap having a free edge and adapted to fold upon itself, a tongue on each ledge, behind which tongues the free edge of the flap may engage to retain the display flap in folded condition, the arrangement being such that when the display flap is folded, a portion of the contents of the box is exposed.

3. In a box comprising top, bottom, front, back and side walls formed in one piece of material, a display flap having a free edge of reduced width, and formed by cutting the top wall to leave a ledge on each side and the flap integral with the top wall intermediate of the said ledges, said display flap being scored transversely to enable it to be folded upon itself, and a tongue formed on each said ledge behind which the

free edge of the flap may engage to retain the display flap in folded condition, the said side walls of the box including closure flaps for entry or withdrawal of goods.

4. The combination with a box comprising front, back, bottom and side walls, of a top wall constituted by a ledge at each end and a section of an intermediate display flap hinged parallelly to the front wall, and the front wall constituted by side pieces, a rabbeted bottom portion, and the other section of the display flap, the said display flap being adapted to fold along a line coincident with the junction of the said top and front walls, and having a free edge of reduced width overlapping said rabbeted bottom portion, a tongue formed on each ledge, behind which the free edge of the flap may engage to retain the display flap in folded condition, the said side walls including closure flaps for the box.

5. In a box comprising top, bottom, front, back and side walls formed in one piece of material, the combination with a fastening flap connecting the bottom to the front wall, of a display flap formed by cutting the top and front walls over a middle area extending over the said fastening flap on the front wall, so that the display flap has a free edge of reduced width and overlapping said fastening flap and is integral with the top wall and operable about a line parallel with the front wall, the top wall including also tongues behind which the free edge of the flap may engage to retain the display flap in folded condition, the said side walls including closure flaps for the box, and the said display flap being scored to adapt it to fold about a line coincident with the junction of the said top and front walls.

6. In a box comprising top, bottom, front, back, and side walls formed in one piece of material, the combination with a fastening flap connecting the bottom to the front wall, of a display flap, having a free edge of reduced width and overlapping said fastening flap, formed by cutting the top and front walls over a middle area extending over the said fastening flap on the front wall, thereby leaving a ledge on the top wall at each side extending from the front wall towards the rear wall and side pieces at each side of the front wall extending from the top wall past the fastening flap towards the said bottom wall, the said display flap being integral with the top wall and operable about a line parallel with the said front wall, and a tongue on each of said ledges adjacent the junction of the display flap and the top wall, the said ledges being wider between the tongues and rear wall, the said side walls including closure flaps for the box and the said display flap being scored to adapt it to fold about a line coincident with the junction of the said top and front walls, until said free edge engages behind said tongues.

7. In a box comprising top, bottom, front, back and side walls formed in one piece of material the combination with a fastening flap connecting the bottom to the front wall, of a display flap having a free edge of reduced width and overlapping said fastening flap, formed by cutting the top and front walls over a middle area extending over the said fastening flap on the front wall, thereby leaving a ledge on the top wall at each side extending from the front wall towards the rear wall and side pieces at each side of the front wall extending from the top wall past the fastening flap towards the said bottom wall, the said display flap being integral with the top wall and operable about a line parallel with the said front wall, and a tongue on each of said ledges adjacent the junction of the display flap and the top wall, the said ledges being wider between the tongues and rear wall, the said side walls including closure flaps for the box and the said display flap being scored to adapt it to fold about a line coincident with the junction of the said top and front walls until said free edge engages behind said tongues, and cut from said scoring towards the rear wall and back again to said scoring to form a figure, which when the display flap is folded stands up from the flap in silhouette.

8. In a box comprising top, bottom, front, back and side walls formed in one piece of material the combination with a fastening flap connecting the bottom to the front wall of a display flap formed by cutting the said top and front walls over a middle area with the free edge overlapping the said fastening flap, and a shoulder at each corner of said free edge, thereby leaving a ledge on the top wall at each side extending from the front wall towards the rear wall and side pieces at each side of the front wall extending from the top wall past the fastening flap towards the said bottom wall, the said display flap being integral with the top wall and operable about a line parallel with the said front wall, and a tongue on each of said ledges adjacent the junction of the display flap and the top wall, the said ledges being wider between the tongues and rear wall, the said side walls including closure flaps for the box and the said display flap being scored to adapt it to fold about a line coincident with the junction of the said top and front walls, until the said shoulders of the flap engage on the respective ledges, and said free edge engages behind the said tongues.

In testimony whereof I affix my signature.

WILLIAM BAMBER.