Aug. 13, 1935. J. F. ROBB 2,011,417

CONCRETE LAYING MACHINE

Filed April 3, 1930 3 Sheets-Sheet 1

Fig. 1.

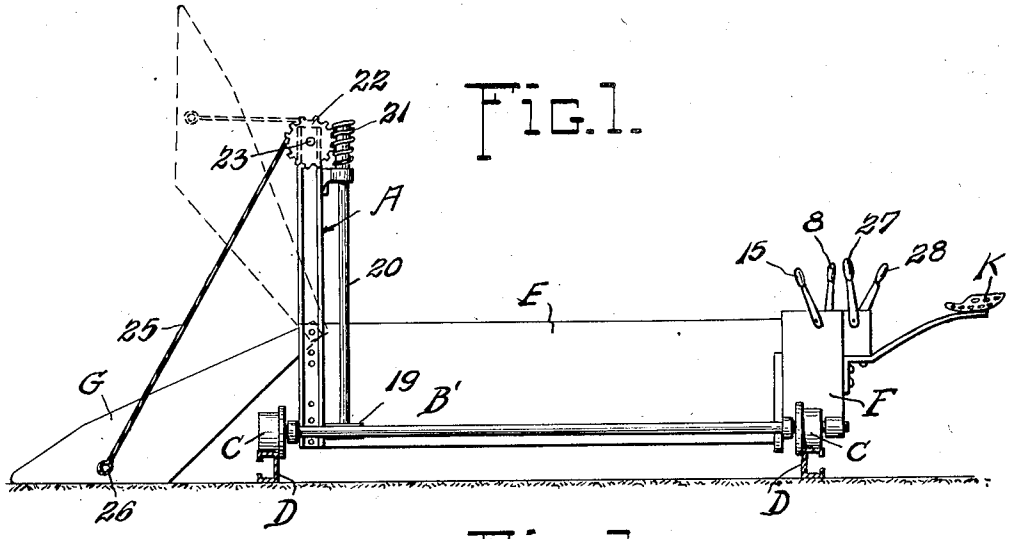

Fig. 2.

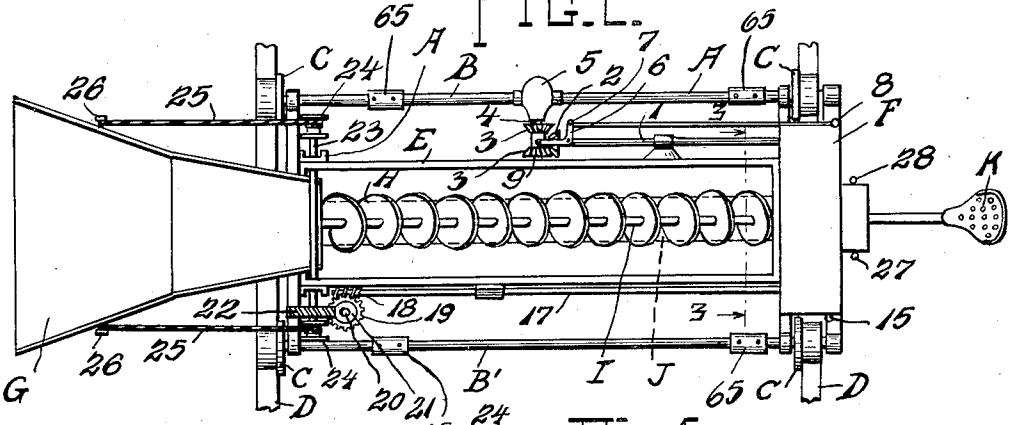

Fig. 4.

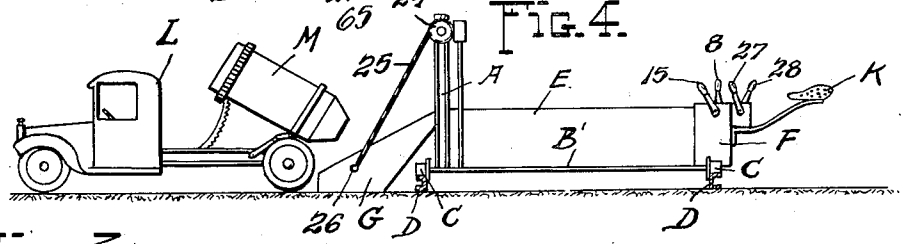

Fig. 3.

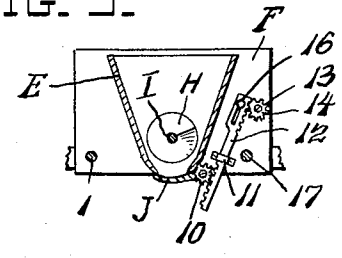

Inventor
John F. Robb.

By Robb & Robb
Attorneys

Aug. 13, 1935. J. F. ROBB 2,011,417

CONCRETE LAYING MACHINE

Filed April 3, 1930 3 Sheets-Sheet 2

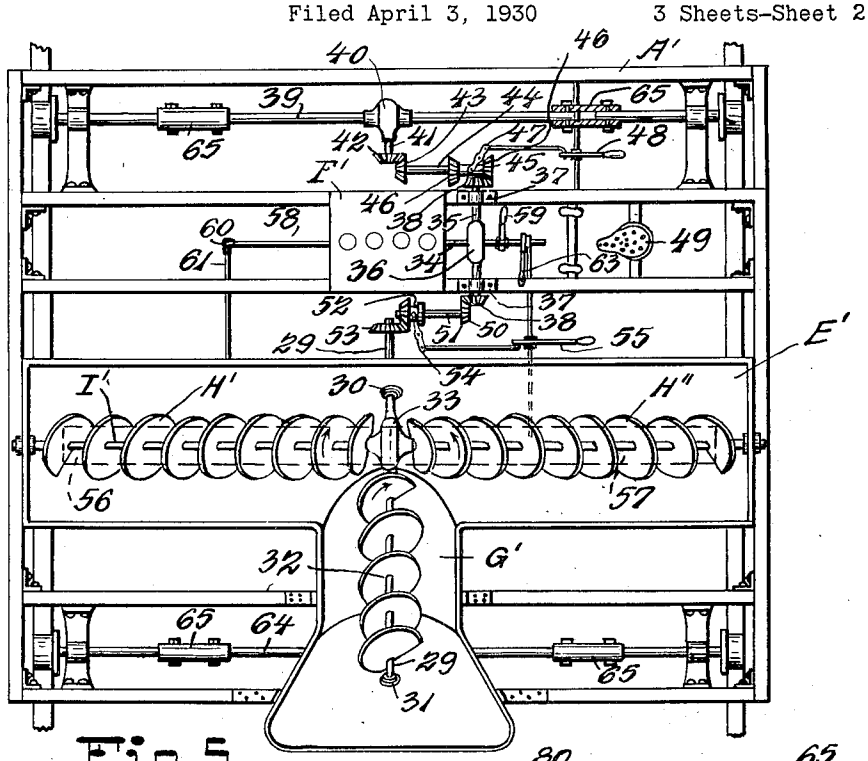

Fig. 5.

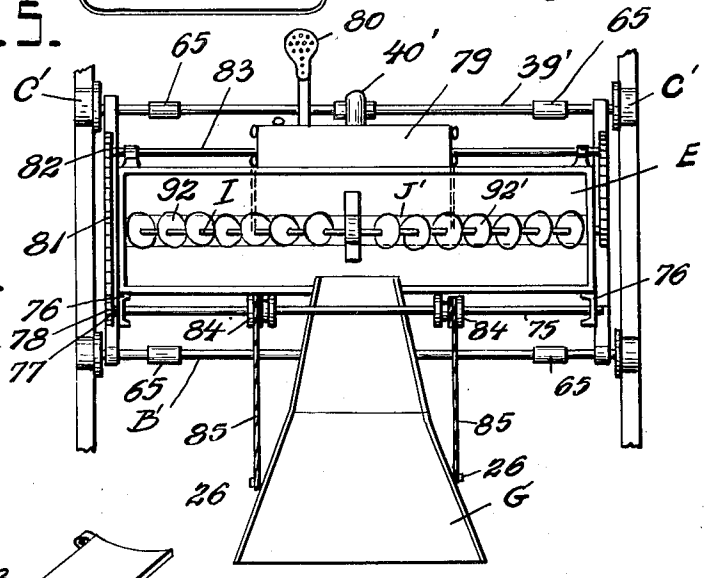

Fig. 6.

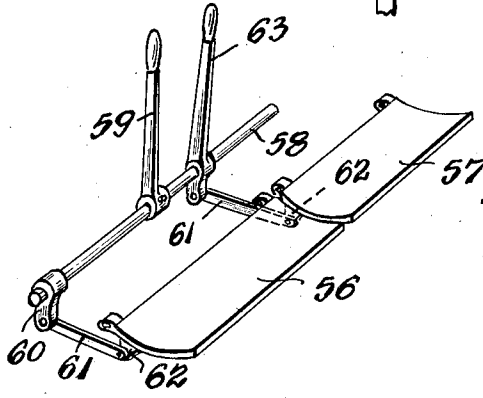

Fig. 7.

Inventor
John F. Robb.

By Robert Cobb
Attorneys

Aug. 13, 1935. J. F. ROBB 2,011,417

CONCRETE LAYING MACHINE

Filed April 3, 1930 3 Sheets-Sheet 3

Fig. 8.

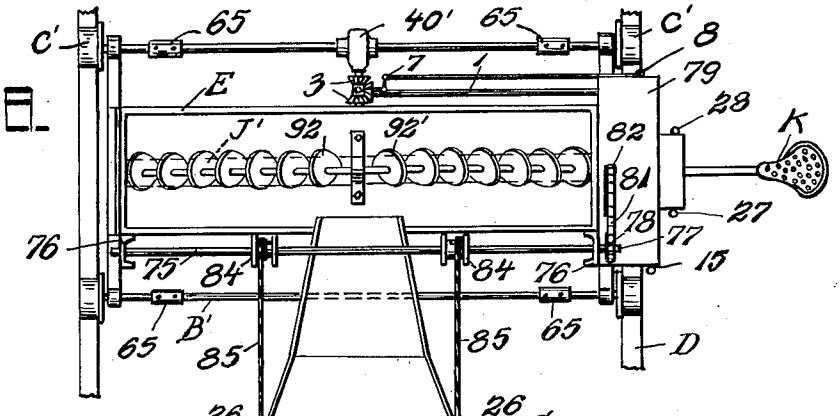

Fig. 9.

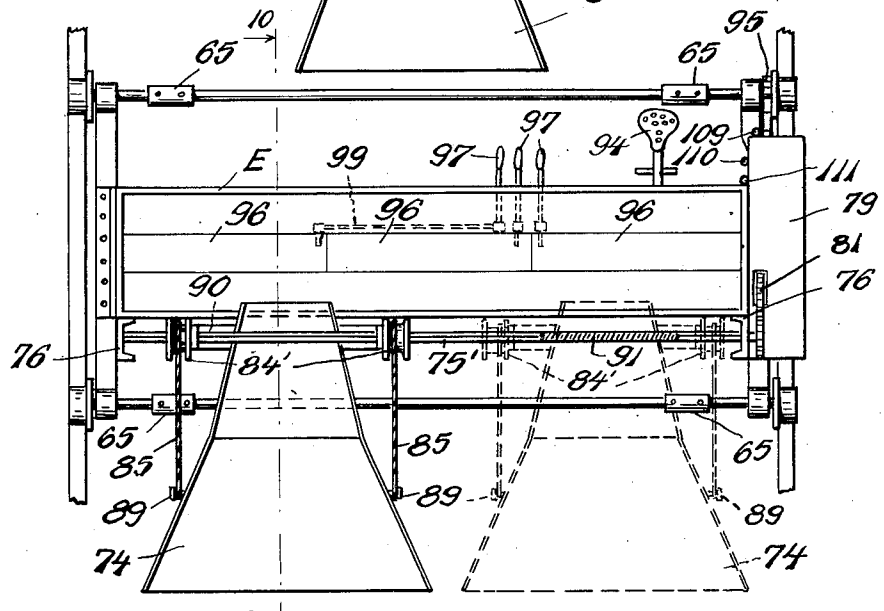

Fig. 10.

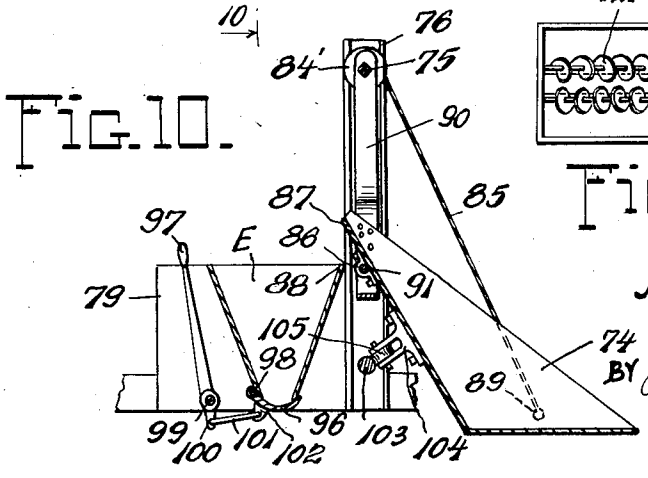

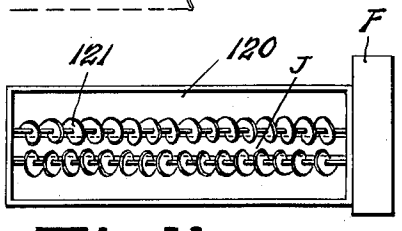

Fig. 11.

Inventor

John F. Robb.

BY Robbins Robb

Attorneys

Patented Aug. 13, 1935 2,011,417

UNITED STATES PATENT OFFICE

2,011,417

CONCRETE LAYING MACHINE

John F. Robb, Cleveland Heights, Ohio, assignor to Koehring Company, Milwaukee, Wis., a corporation

Application April 3, 1930, Serial No. 441,279

14 Claims. (Cl. 94—46)

This invention has to do with machines for building concrete roads and known as paving machines, and embodies a novel design of such a machine for use in conjunction with central mixing plants for the concrete aggregates, the paving machine being located at the point of application of the concrete as customary. In operating with this invention, delivery trucks are availed of to bring the mixed aggregates from the central mixing plant to the paver whereupon they are spread on the subgrade to be paved.

In view of these conditions, it is desirable to provide a machine of this type which is substantially complete in itself in that it provides its own traction means and operating instrumentalities for the distributing hopper and charging means therefor.

Moreover, while there is a growing popularity for the construction of roads of a standard minimum width or integral multiples thereof, the conditions prevalent in various geographic locations make it impossible to follow this idea to the letter. It is necessary, in view of the conditions in many localities, to construct roads of widths other than the standards mentioned above. Moreover, a single road may, depending on certain conditions, require varying widths throughout its length. To meet the foregoing conditions as well as the tendency, I have provided a machine which embodies a portable support provided with a distributing hopper having a discharge door which may be opened to various degrees to thereby control the discharge of aggregate to be deposited on the subgrade, and associate with said distributing hopper a charging chute. Mounted on the support is an engine or other source of power and connections between the propelling means, charging means, distributing hopper, and discharge door therefor are provided. A seat may be disposed at the engine so that the operator may control and operate all of said instrumentalities at will. The support is provided with wheels adapted to engage the road form rails, and the axles of these wheels are made adjustable to conform with the width of road section to be paved.

In carrying out my invention I contemplate the provision of a distributing hopper which extends substantially over the entire width of subgrade to be paved. One form of my invention may include a charging device which is mounted adjacent one end of the distributing hopper, the latter being provided with means to level the aggregate throughout the length of the hopper before the aggregates are deposited onto the subgrade. While the charging device may be stationary or movable when mounted as stated, it is preferably movable so that the machine as a whole may, under certain conditions, occupy a minimum width to avoid materials of construction which may be lying on the subgrade adjacent to the section being paved.

If I so desire, I may locate my charging device at one side of the distributing hopper.

In either of these constructions I counterbalance the charging devices by locating the engine on the opposite side of the distributing hopper.

In another embodiment of my invention, instrumentalities are provided for disposing a charging skip at one side of the distributor hopper and for shifting said skip lengthwise of the hopper, said instrumentalities including means for moving the skip into charging position relative to the hopper at any point in its travel lengthwise of the hopper.

Although in the outline presented above, I have set forth a paving machine adapted to cooperate with a delivery truck which receives its supply from a central mixing plant, I consider it well within the province of my invention, should the need arise, to provide the delivery truck with a mixer and thereby operate independently of a central plant.

With these and other objects and advantages in view, my invention comprises certain other novel constructions, combinations, and arrangements of parts as will be subsequently specified and claimed.

For a full and more complete understanding of the invention, reference may be had to the following description and accompanying drawings, in which—

Figure 1 is a front elevation of one form of paving machine embodying one form of my invention, the road rails being shown in section.

Figure 2 is a plan view of the construction illustrated in Figure 1, the road rails being fragmentarily shown.

Fig. 3 is a fragmentary cross sectional view taken approximately in the plane indicated by the line 3—3 in Figure 2, and illustrating the operating instrumentalities for the discharge door of the distributing hopper.

Figure 4 is a view similar to that of Figure 1, illustrating the manner of loading the mixed aggregates from the truck onto the charging chute associated with the distributing hopper.

Figure 5 is a plan view of a modification of my invention, wherein the charging chute for the hopper is located centrally thereof.

Figure 6 is a plan view showing a still further modification of my invention.

Figure 7 is a perspective fragmentary view illustrating the mechanism for operating the distributor discharge doors.

Figure 8 is a plan view of another modification of my invention.

Figure 9 is a plan view of a further modification.

Figure 10 is a longitudinal sectional view of the construction illustrated in Figure 9, not quite complete.

Figure 11 is a plan view showing a modified form of distributor hopper wherein mixing instrumentalities suitable for mixing asphalt or any suitable road materials, are disposed.

My invention, as described in one form, consists of a support indicated generally at A including axles B—B', connecting wheels C which run on road rails D. The support A has mounted thereon a hopper E extending substantially over the entire width of the support. At one end of the hopper E is an engine F. At the other end is a movable chute G adapted to charge the mixed aggregates into the hopper E. Said hopper is provided longitudinally thereof with a spiral levelling blade H mounted on the shaft I.

The rear axle B has operative connection with the engine F in that the latter is provided with a shaft 1 on which a bevel gear 2 is mounted. Said bevel gear 2 is adapted to mesh with one of two bevel gears 3 mounted on a common block on the shaft 4, one end of which constitutes part of the differential gearing 5. For the purpose of causing the gear 2 to operatively engage one or the other of the gears 3, to thereby propel the support A in one direction or another, I provide said support with a bell crank 6 having one end 7 operatively connected with a rod 8 located within easy reach of the operator. The other end 9 of the bell crank is loosely connected with the block carrying the gears 3. It is, therefore, apparent that actuation of the rod 8 will result in the gear 2 engaging one or the other of the traction gears 3 or occupying a neutral position when it is desired that the support be at rest.

The hopper E is provided at its bottom with a pivoted door J which may be integral or otherwise mounted for rotation with a pinion 10. A guide 11 is fastened to the casing of the engine F and a double rack 12 is movable in said guide 11, one toothed end of the rack being operatively engaged with the pinion 10, and the other toothed portion being operatively engaged with a pinion 13 mounted on a shaft 14 which receives its rotative energy from the engine and is operable by the lever 15 in easy reach of the operator. The rack 12 is provided with further guide means in the form of pin and slot connection at 16 with the engine casing. With this construction it is apparent that rotation of the pinion 13 in one direction or the other will result in opening or closing of the discharge door J, and it is also evident that the said door may occupy any desired position of adjustment with respect to the hopper, to thereby control the thickness of the layer of concrete to be deposited on the subgrade.

For the purpose of elevating and lowering the movable charging chute G, an operating shaft 17 operatively connected with the engine F is provided with a worm 18 which operates the worm wheel 19 mounted on a vertical shaft 20. Said shaft 20 is provided at its upper end with a worm 21 meshing with a second worm wheel 22 mounted on a horizontal shaft 23 which is journaled in the framework of the support A. The shaft 23 has mounted thereon a pair of cable drums 24 about which cables 25 are securely fastened and wound. The opposite ends of said cables 25 are fastened at 26 to the outer end of the charging chute G. The engine is provided with a lever 27 or similar means operable by the attendant to cause rotation of the shaft 17 to provide for the raising and lowering of the chute G by means of the instrumentalities above set forth.

The shaft I is operatively connected with the engine F for rotation, said engine being provided with a lever 28 or similar means for controlling the same.

A seat K is fastened to the framework adjacent the engine F, and is adapted to be occupied by the attendant or operator. As set forth above, each of the operating levers 8, 15, 27, and 28 is disposed within easy reach of the operator. Moreover, his position is such that he can see the condition of the roadway and the contents of the hopper at all times and is thereby enabled to operate all of the instrumentalities provided, at will, in accordance with the requirements of the job. In fact, where it is desirable to deposit a width of concrete less than that of the section being paved, for any purpose whatever, he may deposit a small quantity of the aggregates from the chute G into the hopper E and then immediately lower the chute to non-charging position. When the blade H has distributed the concrete to the desired amount, the operator may then open the discharge door J and deposit the aggregates on the spot desired.

It will be noted that with the engine and loading or charging chute disposed at opposite ends of the distributing hopper E, the machine is balanced at all times and the possibility of its attaining an unbalanced state is reduced to a minimum. With the above construction the delivery truck L may be located at the section adjacent the one being paved, as illustrated in Figure 4, and discharge the aggregates onto the chute G. When the drum M has been moved out of the path of the chute G, the latter is raised to a charging position such as is shown in dotted lines in Figure 1. The movability of the chute is further advantageous in the event that it is necessary to move the support over restricted terrain. With the chute raised as shown in Figure 1, the over-all width of the machine is considerably reduced and the engagement of obstacles by the chute during movement of the machine is obviated.

My invention may involve a modification of the structure above outlined. To this end, the hopper E' in Figure 5 is provided with a shaft I'. Mounted on shaft I' are oppositely directing spiral levelling blades H', H'' of substantially equal length. One side of the hopper E' is provided with an upwardly sloping chute G' which is immovable with respect to the hopper E'. A shaft 29 is mounted in bearings 30 and 31 in the hopper E' and chute G' respectively. Securely fixed on the shaft 29 is a charging spiral blade 32 which ends at a point within the hopper E' just short of the shaft I'. The shaft 29 is provided with a worm which coacts with a wheel disposed centrally on the shaft I', said worm and wheel being enclosed in an oil tight casing 33. The delivery truck L is adapted to deposit aggregates on the chute G', whereupon it is transferred by means of the blade 32 to the innermost ends of the levelling blades H', H''. The blades dis-

tribute the aggregates evenly from the center of the hopper E' to the extremities thereof.

Mounted on the support A' adjacent the side of the hopper E' opposite from the chute G' is an engine F' which furnishes the motive power for operating the hopper instrumentalities and certain other mechanism now to be set forth.

For purposes of propulsion, a shaft 34 on the engine F' has a worm and wheel drive with a shaft 35, said gearing being disposed in an oil tight casing 36. The ends of the shaft 35 are disposed in bearings 37 on the framework of the support A' and bevel gears 38 are mounted on the projecting ends of said shaft. The rear axle 39 is provided with a differential gearing enclosed in a housing 40 and the drive shaft 41 therefor has a gear 42 meshing with a gear 43 mounted on clutch shaft 44. Said shafts may be supported on the framework in any suitable manner. The clutch shaft 44 is provided with a clutch 45 having driving gears 46 which are selectively engageable with one of the gears 38 whereby to propel the support in one direction or another or to maintain the same at rest. For the purpose of moving the clutch 45 into its various positions, operating instrumentalities 47 are provided. Said instrumentalities are controlled by a hand lever 48 within easy reach of the operator for whom the seat 49 is provided.

The other gear 38 mounted on the shaft 35 meshes with a gear 50 mounted on a clutch shaft 51. A clutch 52 coacts with a gear 53 mounted on the shaft 29. The clutch 52 also is provided with operating instrumentalities 54 which are in turn controlled by an operating lever 55 operable by the attendant.

For the purpose of providing for the deposit of the aggregates that have been levelled off from the distributing hopper E' on to the subgrade therebelow, I provide two doors 56, 57. An operating shaft 58 is suitably supported on the framework of the support A' and has fastened thereto a control lever 59. A crank arm 60 is mounted for rotation with the shaft 58 and has pivotal connection with a rod 61 which is in turn pivoted to an extension 62 on the pivoted door 56. It is thus seen that operation of the lever 59 will cause the shaft 58 to actuate the door 56 to regulate the thickness of the layer of concrete to be deposited and also to close half of the bottom opening of the hopper E' if so desired. Loosely mounted on the shaft 58 is an operating lever 63 which is provided with pivotal connections to the door 57 similar to those above mentioned in connection with the door 56. Movement of the lever 63 with respect to the shaft 58 in an arcuate path will consequently result in the operation of the door 57 in accordance with requirements of the job.

The rear axle 39 and a front axle 64 are provided with instrumentalities 65 which make possible the adjustment of the length of the axles to correspond with the width of road to be paved. A similar construction may be provided for the modification shown in Figures 1 to 4 inclusive.

With the form of my construction just described, it is apparent that certain instrumentalities have been obviated, namely, the chute raising and lowering mechanism. This makes for a structure which has an unusually low height so that the device may be moved without fear of obstructions in the way of bridges. Another advantage of this construction is that the delivery truck supplying the aggregates to the chute G' may propel itself along the subgrade in front of the support A' in conformity with the movement of the paver by the operator seated at 49 so that the deposit of the aggregates on the subgrade may be continuous with the supply of aggregates to the hopper E'.

To be sure, it must be borne in mind that with all constructions of pavers embodying my invention a plurality of delivery trucks will be provided so that there will be no loss in time between deliveries.

While I have described my invention in certain forms as availing of a seat for the attendant, any other suitable station for his convenience may be used instead. I desire it further to be understood, that certain of the levers for operating the various instrumentalities mounted on the paver may be done away with in favor of connections operable by the feet of the attendant.

In another modification of my invention, shown in Figure 6, I locate the charging device or skip G at one side and an engine 79 on the other side of the distributor, and make provision for raising and lowering the skip. To this end a shaft 75 is secured for rotation in the standards 76 of the framework. One end 77 of the shaft 75 projects beyond its corresponding standard 76 and has secured thereto a sprocket 78. The engine 79 is located at the opposite side of the distributor E with provision at 80 for seating the operator. A chain 81 and sprocket 82 connect a drive shaft 83 of the engine with the sprocket 78 and shaft 75. Mounted at spaced points on the shaft 75 for rotation therewith is a pair of cable drums 84 having cables 85 secured thereto and wound thereon.

The levelling blades 92 and 92' and shaft I are connected to the engine for rotation in any suitable manner. The drive for purposes of traction is by way of the differential gearing 40' and associated instrumentalities substantially as disclosed in the modification illustrated in Figure 2.

In Figure 8 is shown a construction somewhat similar to Figure 6 with the exception that the engine 79 is placed laterally to the distributor.

In the construction illustrated, while a single discharge door J' is availed of for discharging the contents of the distributor E onto the subgrade to be paved, I consider it well within the province of my invention to employ more than one discharge door. In this form of my invention, moreover, my levelling means takes the form of a pair of oppositely directed spiral levelling blades 92 and 92' which serve to level the aggregates from the center toward the ends of the distributor E.

Figure 9 shows a further modification of my invention where the skip or charging device 74 is shiftable along the distributor to thus serve as a levelling means and also have selective placement of the mixed ingredients in the distributor. The shaft 75' of rectangular shape is driven by the engine 79 in a manner similar to that shown in Figure 8. The cable drums 84' are slidably mounted on a shaft 75'. The bore of said drums is rectangular and because of this construction the drums are rotated with the shaft.

A screw thread shaft 91 is also mounted for rotation in the standards 76. As illustrated, this shaft 91 is disposed directly below the shaft 75, although it may be located elsewhere if so desired. The skip 74 is provided with a bracket 86 which is interiorly threaded and receives the threaded shaft 91. The discharge end 87 of the skip 74 extends beyond the shaft 91 a distance substantially greater than the space between said shaft and the corresponding free edge 88 of the

distributor E so that when the skip is raised in the position where it will discharge its contents into the hopper, the escape of the mixed aggregate between the skip and the distributor is prevented. The ends of the cables **85** remote from the drums **84'** are fastened at **89** to the sides of the skip **74**. The cable drums **84'** are rotatably secured to a bracket **90** which of U-shape configuration and free of the skip so that as the skip is caused to move longitudinally on the shaft **91** by reason of the threads thereon the bracket **90** and pulleys **84'** are moved simultaneously so that the cables **85** are maintained in operative alignment with the skip.

The position of the operator may be at **94** for the reason that the various levers **97**, **109**, **110** and **111**, for operating the instrumentalities would be more convenient. In this form the traction may be by chain drive **95** and the distributor E may be provided with a plurality of discharge doors **96**, three being illustrated in this instance. Individual levers **97** are availed of for operating said doors which are pivoted to the distributor at **98**. The door remote from the seat **94** may have operative connection with its corresponding lever **97** through the medium of a suitably supported shaft **99**. The lever has an extension **100** to which the link **101** is pivoted, said link being pivotally connected to the bracket **102** on the door **96**. The operative connection between the other two levers **97** and their corresponding doors is, for all practical purposes, the same as that just described and it is apparent that the operation of said levers by the operator or attendant will result in corresponding actuation of the doors **96**. As pointed out above in connection with other forms of my invention employing more than one door, it is by this construction possible to distribute the mixed aggregates over selected portions of the subgrade having a width equal to or less than the entire width of the subgrade being paved and over which the machine is adapted to travel.

When the skip occupies its lowest position as shown in Figure 10, it would be in contact with the ground and a lateral movement of the skip may cause injury, not only to the skip, but to its supporting and operating structures. To avoid this, I locate the shaft **103** below the shaft **91** and secure the ends of the same in the standards **76**. I secure a forked bracket **104** to the bottom of the skip **74** and rotatably mount a roller **105** between the arms of the bracket **104**. The roller **105** is grooved to accommodate the curvature of the shaft **103**, although these parts may be otherwise shaped if so desired. It will thus be apparent that with the skip at its lowest position, as shown in Figure 10, it will be prevented from touching the ground thereby avoiding the possibility of injury by lateral movement.

As in the forms of my invention previously described, I make provision for adjustment of the machine to accommodate varying widths of subgrade to be paved by means of the coupling members and associated parts **65**.

As shown in Figure 11, it may be desirable that my apparatus be used not only for distributing concrete or road paving materials, but under certain conditions, it might well be used for mixing the paving material or materials as it is supplied to the apparatus by a skip or similar device, such as shown in the various figures of the drawings. Thus, in Figure 11, the road width hopper **120** may contain the spiral mixing devices **121**, having their spiral portions inclined in opposite directions so that the paving materials dumped into the hopper will be thoroughly mixed preliminary to being laid down on the road by the controlling features of construction such as have been previously described. Such an arrangement of mixing machine may be useful for mixing asphalt in resurfacing roads with such material.

Having thus described my invention, what I claim as new and desire to secure by Letters Patent of the United States, is—

1. In a paving machine of the class described, a distributor having a plurality of independently operable discharge doors, and means for levelling the aggregates evenly throughout the length of the distributor, whereby a layer of aggregates of a width less than or equal to the width of the subgrade section to be paved may be selectively deposited thereon.

2. In a paving machine of the class described, a distributor having a plurality of independently operable discharge doors, means for levelling the aggregates evenly throughout the length of the distributor, whereby a layer of aggregates of a width less than or equal to the width of the subgrade section to be paved may be selectively deposited thereon, and means for controlling the thickness of said layer.

3. In a paving machine of the class described, a portable support, a distributor, said support including standards adjacent said distributor, a skip pivotally mounted on said standards, means for moving the skip into and out of charging position relative to said distributor, and instrumentalities for shifting said skip relative to said distributor.

4. In a paving machine of the class described, a portable support, a distributor, said support including standards adjacent said distributor, a skip pivotally mounted on said standards, means for moving the skip into and out of charging position relative to said distributor, and instrumentalities for shifting said skip and means relative to said distributor.

5. In a paving machine of the class described, a distributor having a plurality of independently operable discharge doors, whereby a layer of aggregates of a width equal to or less than the width of the subgrade section to be paved may be selectively deposited on said section.

6. In a paving machine of the class described, a distributor having a plurality of independently operable discharge doors, whereby a layer of aggregates of a width equal to or less than the width of the subgrade section to be paved may be selectively deposited on said section, and means for controlling the thickness of the layer.

7. In a paving machine of the class described, a distributor having a plurality of independently operable discharge doors, whereby a layer of aggregates of a width equal to or less than the width of the subgrade section to be paved may be selectively deposited on said section, and means for depositing mixed aggregates over said doors selectively.

8. In a paving machine of the class described, a distributor having a plurality of independently operable discharge doors, whereby a layer of aggregates of a width equal to or less than the width of the subgrade section to be paved may be selectively deposited on said section, means for depositing mixed aggregates over said doors selectively, and instrumentalities for causing relative movement of said distributor and means.

9. In a paving machine of the class described,

a distributor having a plurality of independently operable discharge doors, whereby a layer of aggregates of a width equal to or less than the width of the subgrade section to be paved may be selectively deposited on said section, and means for depositing mixed aggregates over said doors selectively, said instrumentalities including a threaded member extending substantially parallel to said distributor, a charging device in threaded engagement with said member, and mechanism for causing relative movement between said member and device.

10. Apparatus for spreading aggregate upon roads comprising a framework, traction members for said framework, means effecting transportation of said framework along a surface upon which aggregate is to be spread, a screw spreading member, means for rotating said screw spreading member during the travel of said framework, and means associated with said screw spreading member for receiving aggregate adjacent the side of the surface upon which it is to be spread and delivering it to said screw spreading member.

11. Apparatus for spreading aggregate upon roads comprising a framework, oppositely pitched screw spreading members, means for rotating said screw spreading members, and means associated with said screw spreading members for receiving aggregate adjacent the side of the road and delivering it to said screw spreading members.

12. Apparatus for spreading aggregate upon roads comprising a framework, oppositely pitched screw spreading members, means for rotating said screw spreading members, and means associated with said screw spreading members for receiving aggregate adjacent either side of the road and delivering it to said screw spreading members.

13. Apparatus for spreading aggregate upon roads comprising a framework, oppositely pitched screw spreading members, means for rotating said screw spreading members, and means associated with said screw spreading members for receiving aggregate adjacent both sides of the road and delivering it to said screw spreading members.

14. Apparatus for spreading aggregate upon roads comprising a framework transportable along the surface upon which material is to be spread, oppositely pitched screw spreading members carried by said framework and having their adjacent ends disposed approximately at the center of the surface upon which the material is to be spread, and means associated with said screw spreading members for receiving aggregate adjacent the side of the road and delivering it to the adjacent ends of said screw spreading members.

JOHN F. ROBB.