J. J. HINES.

BOILER ALARM.

APPLICATION FILED AUG. 27, 1917.

1,295,501.

Patented Feb. 25, 1919.

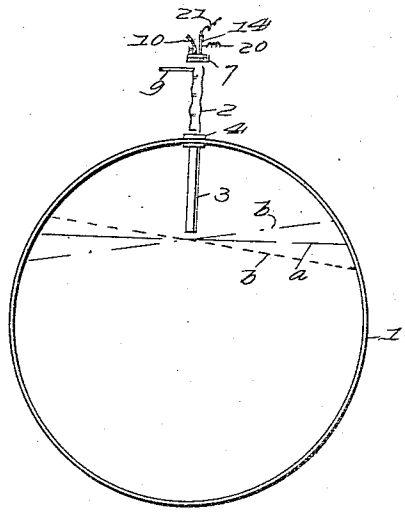

Fig. 1.

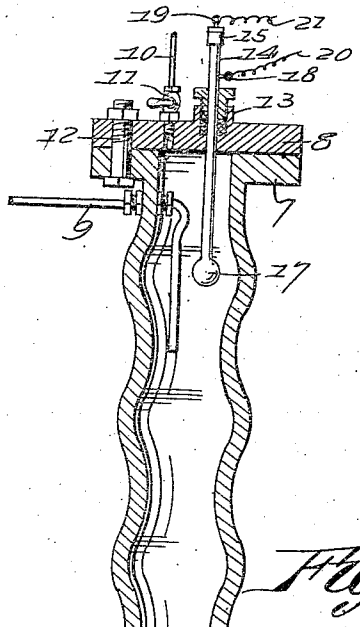

Fig. 2.

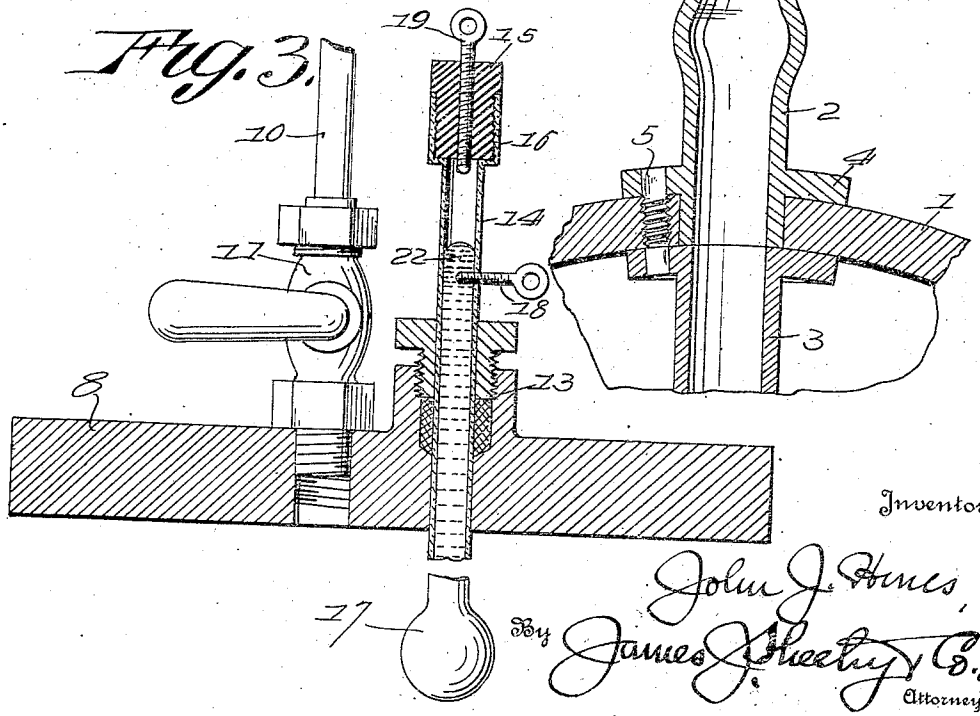

Fig. 3.

Inventor

John J. Hines,

By James J. Sheehy & Co.

Attorneys

UNITED STATES PATENT OFFICE.

JOHN J. HINES, OF HALIFAX, NOVA SCOTIA, CANADA.

BOILER-ALARM.

1,295,501. Specification of Letters Patent. Patented Feb. 25, 1919.

Application filed August 27, 1917. Serial No. 188,505.

To all whom it may concern:

Be it known that I, JOHN J. HINES, a citizen of the Dominion of Canada, residing at Halifax, in the Province of Nova Scotia and Dominion of Canada, have invented new and useful Improvements in Boiler-Alarms, of which the following is a specification.

My present invention pertains to boiler alarms; and it contemplates the provision of a simple, inexpensively installed and reliable apparatus, calculated in the event of the water in a boiler getting dangerously low to apprise the engineer of the fact so that he can have the boiler supplied with water before any damage takes place.

The apparatus is designed more particularly for use on a marine boiler, and will be fully understood from the following description and claims, when the same are read in connection with the drawing, accompanying and forming part of this specification, in which:

Figure 1 is a view diagrammatic in character and showing the application of my apparatus to a marine boiler, and also showing that when a vessel is rolling or pitching in a heavy seaway there is practically no rise and fall of water in the center of the boiler where my novel apparatus is preferably located, particularly when the apparatus is used on a marine boiler.

Fig. 2 is an enlarged vertical section of my novel apparatus.

Fig. 3 is an enlarged view, partly in elevation and partly in vertical section showing the upper portion of the apparatus.

Similar numerals of reference designate corresponding parts in all of the views of the drawings.

The boiler 1 may be of any type, and in furtherance of my invention, a pipe 3, preferably of iron, and a column 2, preferably of brass, are connected with the boiler shell, the connections being effected, in the preferred embodiment of the invention, through the medium of a sandwich joint as best shown in Fig. 2, the said joint including flanges 4 and suitable connecting means 5.

When employed in a marine boiler, as in Fig. 1, the pipe 3 extends downwardly through the steam and water space to the danger level of the boiler—*i. e.*, about one inch above the highest heating surfaces, and I would also have it understood that the preferred arrangement of the pipe 3 is in the center of the boiler perpendicularly and longitudinally, this in order that the portion of the water adjacent to the lower end of the pipe will not be materially affected by movement of the ship.

The column 2 extends above and outside the boiler shell so as to radiate heat from the water contained in the column into the atmosphere, and in order to increase the radiating surface of the column, which is hollow, the said column is made in convolute form as illustrated.

The upper end of the column 2 is flanged, as indicated by 7, and to said flange 7 is connected by bolts 12 or other suitable means a closure plate 8.

At 17 is a container, preferably of copper, and in the said container is a mass 22 of mercury or equivalent material. The upper portion of the container, which upper portion is numbered 14, in Figs. 2 and 3, is carried through the plate 8 and a gland 13 thereon, and may, when deemed necessary be insulated from the said plate and gland.

At 15 in the upper end of the container 14 is a plug of insulating material which is preferably threaded into an enlarged portion of the container as indicated by 16, and screwed in the said plug 15 is a terminal 19 designed to be connected with the plus pole of a source of electric energy (not shown). At 18, and bearing in the container 14 and contacting with the mercury is a complementary terminal designed to be electrically connected with the alarm or alarms (not shown) through the medium of which the engineer and other persons in authority are put on notice when the water in the boiler is dangerously low.

Under normal safe conditions, the boiler pressure operates to force water up the pipe 3 so as to flood the column 2 which, as before stated, is outside the boiler. This water being stagnant and in a column adapted to radiate heat into the atmosphere, it follows that such water will be considerably cooler than the water within the boiler, and consequently the heat given off by such water

will not operate to expand the mercury 22 to any material extent. In the event, however, of the water in the boiler falling below the end of the pipe 3, the said pipe 3 and the column 2 will be immediately occupied by steam of high temperature, and in consequence the mercury 22 will be quickly expanded and caused to electrically connect the terminals 18 and 19 whereupon the alarm or alarms will be sounded.

Inasmuch as my invention does not reside in the alarm or alarms, I would have it understood that without involving departure from the scope of my claimed invention, any signal may be employed to apprise those in authority that the water in the boiler is dangerously low.

When desired a cock 11 may also be employed on the plate 8, the said cock being connected to a small bore pipe 10. This pipe 10 may be carried downwardly and equipped with a second cock (not shown) within convenient reach of the operator so that incidental to the operation of getting up steam in the boiler, air may be exhausted from the pipe 3 and the column 2. It will also be noted that when the last mentioned cock is opened, during the operation of the boiler, the column 2 will be filled with water of the same temperature as that in the boiler, and the electrical circuit will be completed to sound the alarm and enable the engineer to make certain that the apparatus is in good working order.

Also when desired, a small copper pipe 9, Fig. 2, may be led from the feed pump side of check valve into the column 2, adjacent to the mercury container 14—17. By virtue of this provision, feed water may be passed through the column 2 so that the temperature in the column will be the same as that of the feed water, and this condition will continue until the water level drops when by reason of the column being occupied by high temperature steam the circuit will be closed and the alarm sounded. It will be manifest that the feed water will pass through the said steam but will not appreciably diminish the temperature thereof.

Having described my invention, what I claim and desire to secure by Letters-Patent, is:

1. The combination of a boiler, a flanged depending conduit carried by the upper portion of the boiler within said boiler, an exterior hollow convoluted column provided with a flange portion at its top and a flange portion near its bottom and in alinement with said conduit, a closure plate secured to the flanged upper portion of the said column, a mercury container carried by said plate and depending within the column, a terminal secured to the container intermediate its length and normally in contact with the mercury therein, a second terminal carried by the upper end of the container and insulated therefrom normally resting out of contact with the mercury, and means for simultaneously securing both of the flanged portions of the conduit, and the column to the upper shell of the boiler in vertical alinement.

2. The combination of a boiler, a depending conduit secured to the upper portion of the boiler within said boiler, an exterior convoluted column secured to the upper portion of the boiler provided with a flanged upper end to which is fixedly secured a closure plate, a mercury container carried by said plate and depending within the column, a terminal secured to the container intermediate its length normally in contact with the mercury therein, a secured terminal carried by the upper end of the container and insulated therefrom normally resting out of contact with the mercury, and a valved air pipe carried by the closure plate and depending within the interior of said column and leading to the atmosphere.

3. The combination of a boiler, a depending conduit secured to the upper portion of the boiler within said boiler, an exterior hollow convoluted column communicating in vertical alinement with and forming a continuation of said conduit and an increased radiating surface, a thermal circuit closing means positioned at the top portion of the column within the same, and a valved air pipe secured at the top of the column depending therein and leading to the atmosphere.

4. The combination of a boiler, a depending conduit secured to the upper portion of the boiler within the same, an exterior hollow column communicating with and forming a continuation of said column in vertical alinement therewith, a closure plate secured to the flanged upper portion of said column, a thermal circuit closing means carried by said plate at the upper portion of the column and depending therein and leading to the atmosphere, and a feed water pipe fitted into the top portion of the column and suspended therein adapted to maintain a uniform temperature within the column until the water in the boiler reaches the danger level.

5. The combination of a boiler, a depending conduit secured to the upper portion of the boiler within the same, an exterior hollow column secured to the boiler in vertical alinement with and forming a continuation of said conduit and increased capacity of radiating heat into the atmosphere; said column being formed of conductive material, valved means secured to the top of the column and in communication with its interior and the atmosphere, whereby air may be exhausted from both conduit and col-

umn, thermal circuit closing means secured to the top of the column and depending therein, and a feed water pipe led into the top portion of the column adapted to prevent the temperature from rising within the column sufficient to cause an alarm before the water in the boiler reaches the danger level.

In testimony whereof I have hereunto set my hand in presence of two subscribing witnesses.

JOHN J. HINES.

Witnesses:
FRED E. LORDLY,
W. H. WILSON.