(12) UK Patent Application (19) GB (11) 2 175 994 A

(43) Application published 10 Dec 1986

(21) Application No 8609261

(22) Date of filing 16 Apr 1986

(30) Priority data

(31) 85202044 (32) 31 May 1985 (33) CN
8528452 19 Nov 1985 GB

(51) INT CL[4]
F23D 3/16

(52) Domestic classification (Edition H):
F4T 251 GX

(56) Documents cited
GB A 2115918 GB 0195844

(58) Field of search
F4T
Selected US specifications from IPC sub-class F23D

(71) Applicant
Wai-Shi Kwok,
Metropole Building, Block C, 13th Floor, Room 27, 7 King's Road, North Point, Hong Kong

(72) Inventor
Wai-Shi Kwok

(74) Agent and/or Address for Service
Marks & Clerk, 57-60 Lincoln's Inn Fields, London WC2A 3LS

(54) Candles

(57) A candle in the form of a wax body (3) with an embedded wick (4) is supported by a spring (6) within a tubular outer casing 1 which has a thermally-insulating lining 2. A thermally-insulating cover (5) extends across the upper end of the tubular outer casing (1) and the wick (4) extends through an aperture (14) in the cover (5).

Thermally conducting wires (20) extend from the aperture (19) in the cover (5) to conduct heat to the periphery of the candle body (3) below the cover (5) to ensure uniform melting of the wax which flows through apertures (7) in the cover (5). As the weight of the candle decreases the spring (6) urges the candle body upwards towards the cover (5) to maintain the burning wick at a generally constant height.

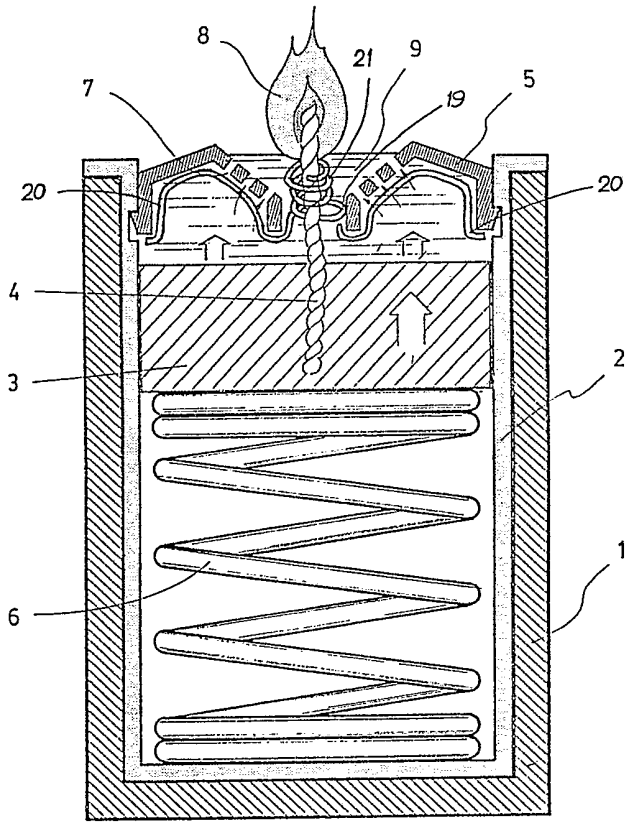

FIG. 1

GB 2 175 994 A

2175994

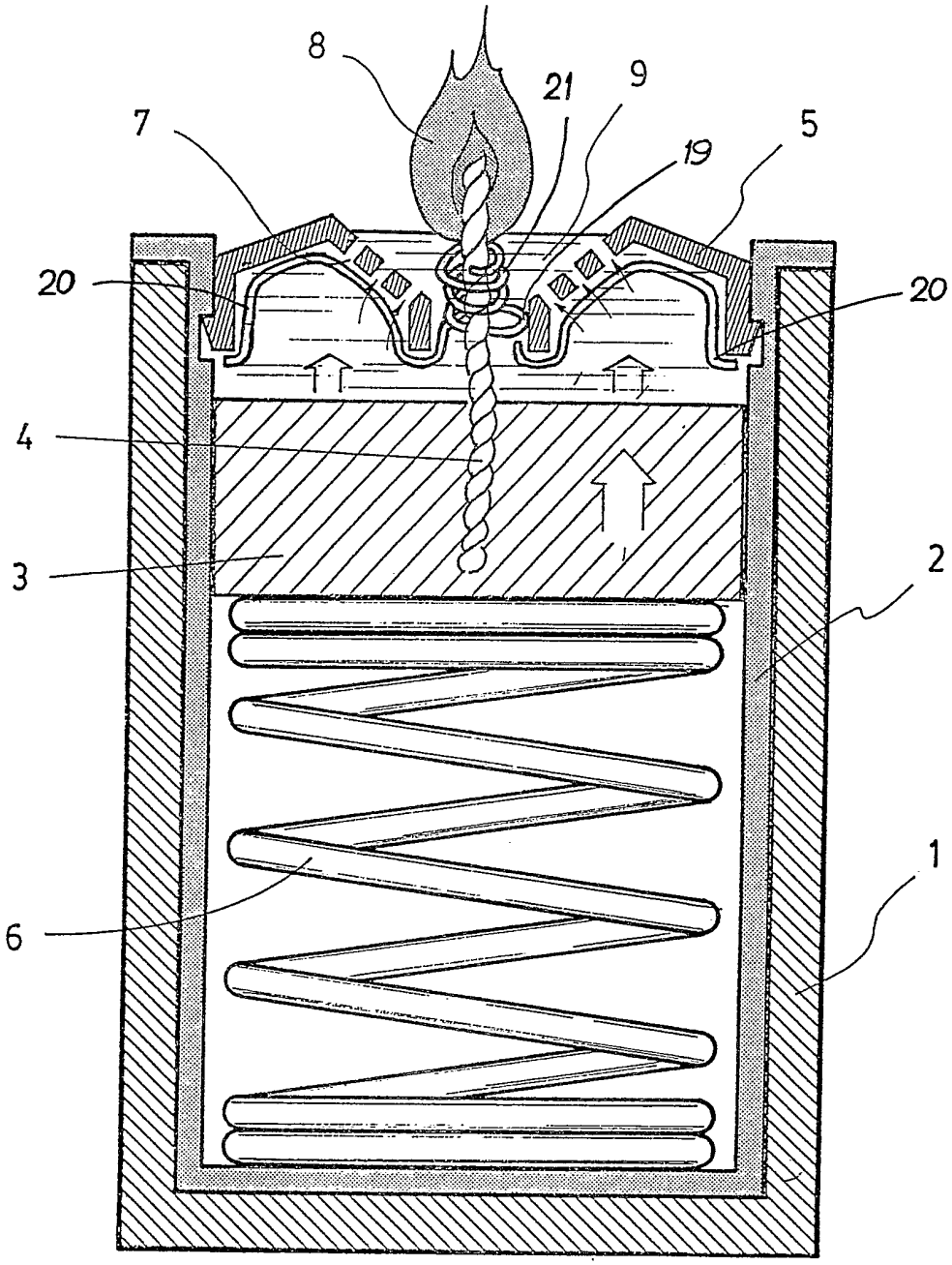

FIG. 1

2175994

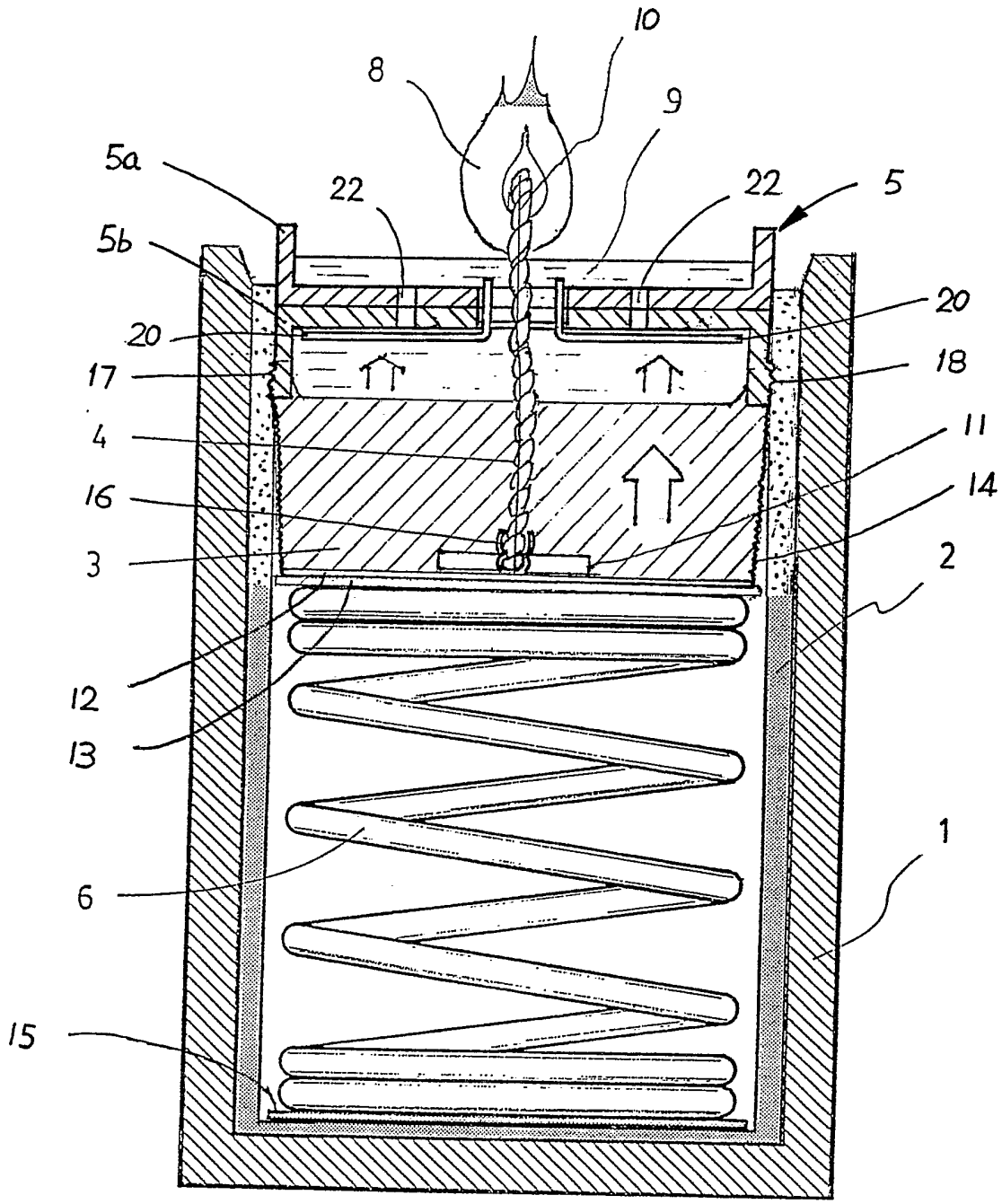

FIG. 2

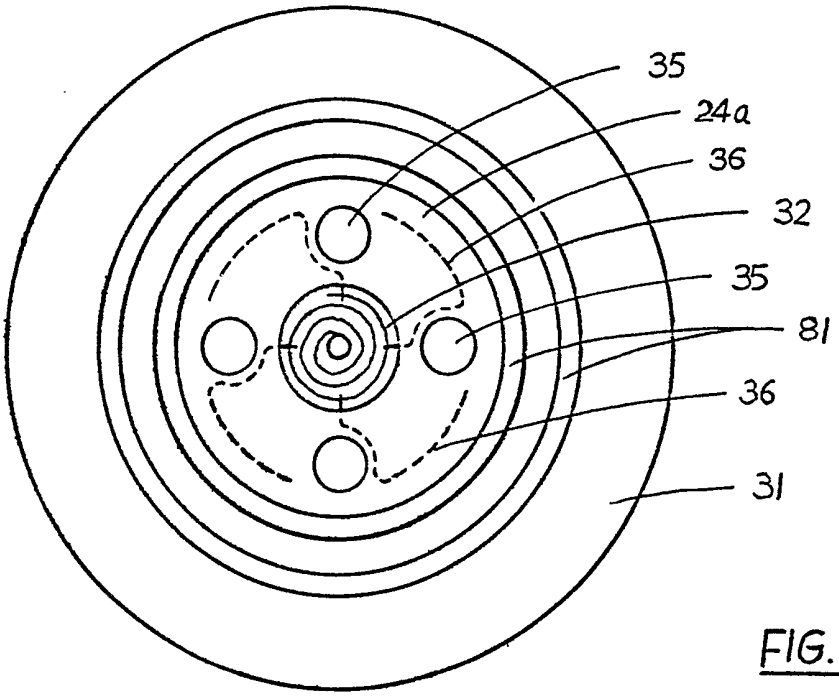
35
24a
36
32
35
81
36
31

FIG. 4

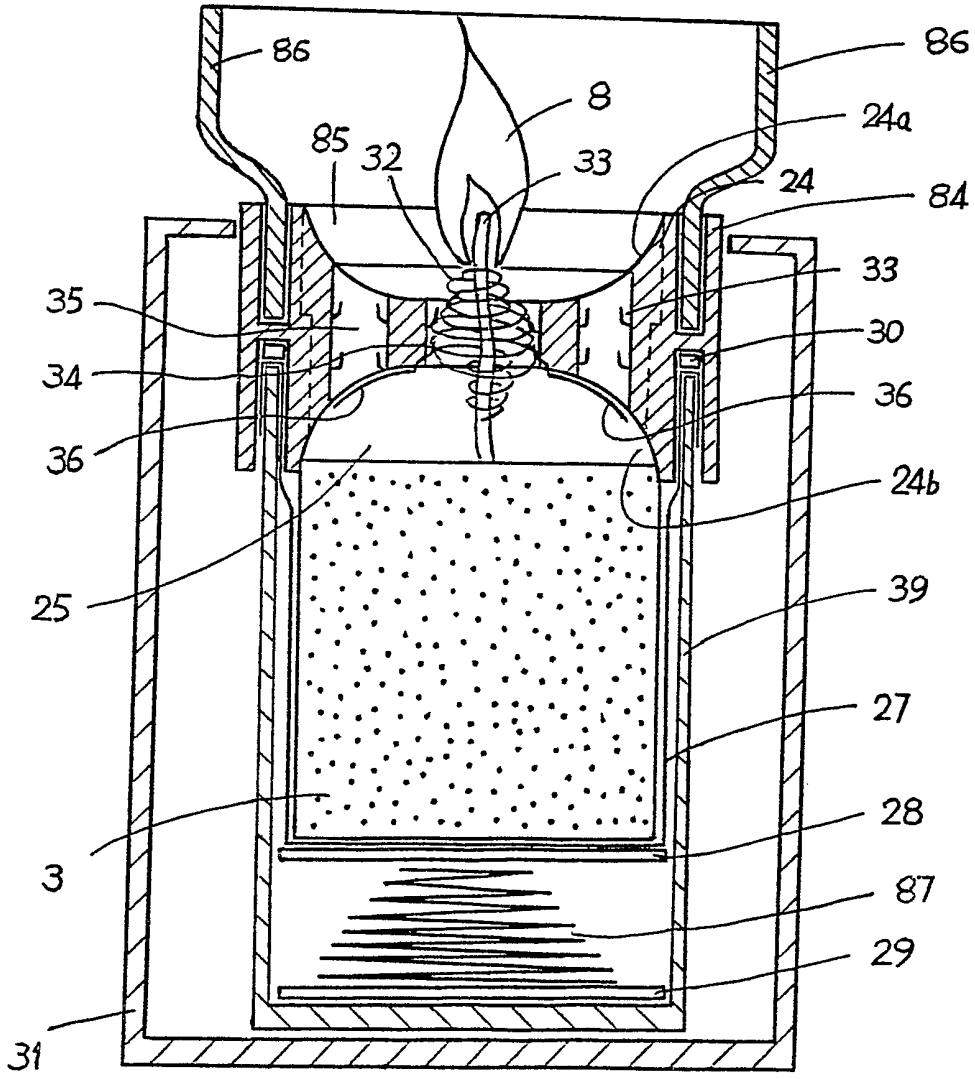
86
86
8
24a
85
32
33
24
84
33
35
30
34
36
36
24b
25
39
27
3
28
87
29
31

FIG. 3

2175994

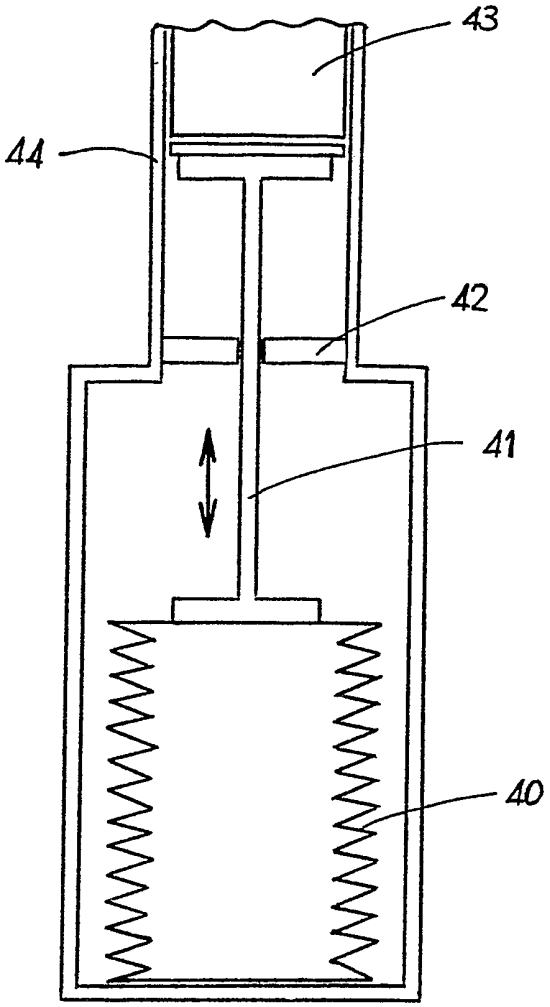

FIG. 5

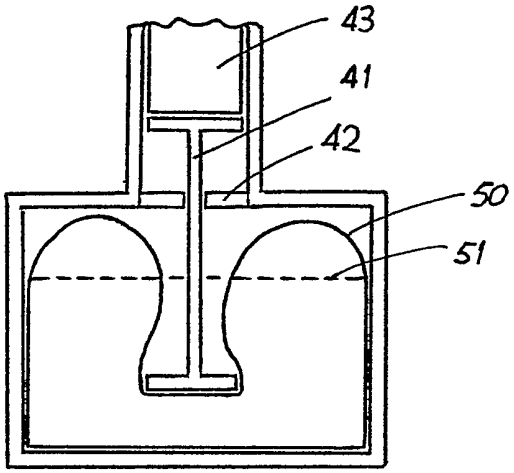

FIG. 6

2175994

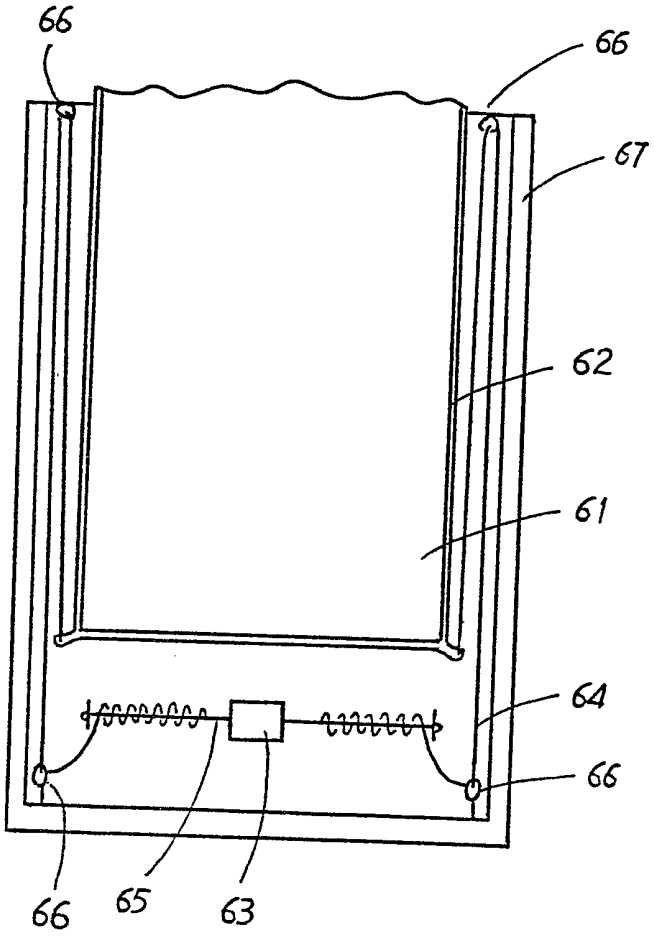

FIG. 7

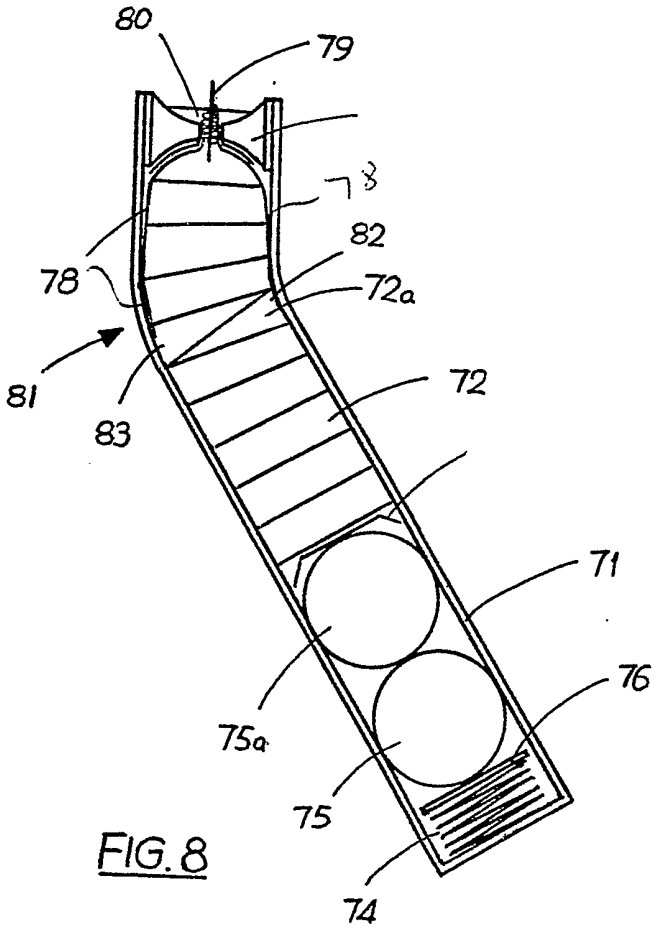

FIG. 8

SPECIFICATION

Candles

This invention relates to candles and in particular to apparatus for housing a candle and maintaining the burning wick in a substantially constant position.

Candles are known comprising a wax body having an embedded wick. The candle burns from the top, the wax around the base of the exposed wick melting before it is burnt. It is also known to house a candle in a container and support the candle on a compressed spring. As the candle burns its weight is reduced, allowing the spring to expand and raise the candle, so that the top of the unburnt candle portion remains at a generally constant height.

The present invention provides a cover for a burning candle, comprising a thermally insulating plate adapted to cover the upper surface of the candle, the plate having an apparatus or slot through which the candle wick projects. Preferably means is provided for conducting heat from the region of the candle wick to beneath the cover.

By providing the cover, a pool of molten wax can be formed on top of the cover around the burning wick of the candle, whilst the wax immediately below the wick is melted by the transfer of heat below the cover to form a reservoir the molten wax passing through the aperture in the cover to replenish the pool of wax above the cover as it is burnt. The cover may provide for more controlled melting of the candle across its top surface.

The means for conducting heat beneath the cover may comprise a spiral of thermally conducting material, such as wire, which is provided in the aperture or slot and may serve also to support the candle wick. This is particularly applicable for candles of smaller diameter.

For larger diameter candles in particular the means for conducting heat may comprise thermally conducting elements which extend from the aperture or slot beneath the cover to the outer periphery of the candle.

Preferably a plurality of apertures or slots are provided to allow molten wax to flow from the reservoir to the pool above the plate.

A plurality of apertures may be provided. These may be for a plurality of wicks which may be embedded in the candle, or small fireworks may be supported in the apertures.

Very preferably the cover has a dished lower and/or upper surface assisting the flow of molten wax from beneath plate and/or its collection around the candle wick.

It is envisaged that the cover may rest on the candle, but it is preferred that the cover be supported and the candle is urged towards the cover, for example by a spring. As the candle wax burns, the bottom, unburnt part of the candle moves upward under the pressure of the spring.

The cover may comprise two layers, an upper layer of heat resistant material to resist the candle flame, for example of metal, glass or porcelain, and a lower layer of insulating material, for example of plastics. The cover may be formed of a high temperature thermoset resin which will withstand the candle flame and also be thermally insulating.

Preferably, the cover is supported by a decorated tube housing the candle.

Another aspect of the invention comprises a candle housed in a curved or bent tube, and means for urging the candle along the tube. The tube may be capped at one end by a thermally insulating cover as defined above.

The means for urging the candle along the tube may comprise a sphere, to facilitate movement around the bend of the tube. The sphere may be of wax so that it will burn. If desired, the candle itself may comprise a plurality of such spheres.

In another preferred form the candle comprises pairs of wedge shaped wax pieces having different melting points. Means is provided to heat the wax in the vicinity of the bend and by providing the wax pieces of different melting points the preferential melting of one side of the candle may facilitate movement around the bend of the tube.

Means for heating the candle in the vicinity of the bend may comprise a thermally conducting wire extending down the side of the tube from the region of the candle wick.

Another aspect of the invention provides a candle which is encased along its length and at its base in a compressible casing. The casing may be of metal foil, such as aluminium foil, or plastics, such as polyethylene.

The invention will be further described by way of example with reference to the accompanying drawings, in which:-

Figure 1 is a sectional view of a first embodiment of the invention;

Figure 2 is a sectional view of a second embodiment of the invention;

Figure 3 is a sectional view of a third embodiment of the invention;

Figure 4 is a partial plan view of the cover of Figure 3;

Figure 5 is a schematic sectional view of a part of yet another embodiment of the invention;

Figure 6 shows a modification of the embodiment of Figure 5;

Figure 7 shows a modification of the embodiment of Figure 6; and

Figure 8 is a cross-section showing yet another embodiment of the invention.

Referring firstly to Figure 1 of the drawings, the candle device shown therein comprises a tubular outer casing 1, an inner lining 2 of thermally-insulating material, a candle in the form of a wax body 3 with an embedded wick 4, an apertured thermally-insulating cover 5 extending across the upper end of the tubular outer casing 1 and a helical compression spring 6 within the casing 1 below the wax body 3.

The outer casing 1 can be formed of any appropriate material such as porcelain, plastics, marble, metal, glass, fibre, wood or cardboard and can be provided with a plain or decorative external surface.

The lining 2 fits snugly in the casing 1 and has a tubular sleeve portion with an integral base portion

and an annular outwardly extending flange at its upper end which covers the uppermost edge of the casing 1. The lining 2 also has an internal annular groove near to its upper end for receiving the cover 5 as a snap fit. This ensures that the cover 5 will not accidentally become detached from the lining.

The wax body 3 is mounted within the lining 2 below cover 5 and is subjected to an upwardly directed force exerted by the compression spring 6.

The cover 5 which is made of thermally insulating material such as a hard, high melting point thermoset resin material, comprises an inner funnel-shaped portion, an outer sleeve portion having an outwardly directed lip which is snap fittably received in the annular groove in the lining, and an intermediate portion extending between the inner and outer portions. The cover has a central aperture 19 through which the wick 4 extends and a plurality of other openings 7 through which molten wax can flow. The number of openings depends on the type of wax used for the body 3 and the diameter of the cover 5. Thermally conducting metal wires 20 extend from the aperture 19 to conduct heat to the periphery of the candle below the cover 5, to melt the wax across the full diameter of the candle. One of the wires 20 forms a conical spiral 21 supporting the wick in the aperture 19.

For small diameter candles the spiral 21 may be sufficient to conduct heat below the cover to melt the candle. For larger diameter candle it is preferred to use wires 20, it being preferable also a spiral 21 to support the wick.

Slots, preferably extending radially from the centre, may be provided in place of or as well as a plurality of discrete apertures.

In use, as the candle burns, molten wax 9 is formed above the solid wax body 3. There is of course also a transition zone beween the solid and molten wax where the wax is soft but not molten. The molten wax flows into the region defined by the funnel-shaped portion of the cover 5 via the opening or openings 7 to a level just below the uppermost part of the cover 5. The downward force exerted by the weight of the body 3 and molten wax 9 becomes less due to wax loss while burning with the result that the spring 6 is able to relax and move the body 3 upwards in such a manner that the surface level of the molten wax is maintained substantially constant. The flame extends above the open upper end of the casing 1, but wax does not flow over the casing 1.

The casing 1 of this candle device maintains its external appearance and can be used with replaceable wax bodies 3.

Referring now to Figure 2 of the drawings, the candle device shown therein is generally similar to that shown in Figure 1. However, the wax body 3 has a rigid base plate 12 attached to its lowermost end. The wick 4 whilst being embedded in the wax body 3 is attached to the centre of the plate 12 by means of a clip 16 on an apertured aluminium disc 11 to prevent sideways movement of the lower end of the wick when burning of the wax body 3 is nearly complete and a stiff support member 10, for example of bamboo fibre, is provided within the wick 4 to keep the latter upright.

The wax body 3 and base plate 12 are enclosed in an open-topped cylindrical sheet of pliable foil 14, for example, of aluminium foil of plastics such as polyethylene. Circular plates 13 and 15 are provided between the upper end of the springs 6 and the foil 14 and between the lower end of the spring 6 and the lining 2, respectively, to protect the foil and lining from damage by the spring and to ensure that the force of the spring 6 is applied uniformally to the base of the wax body 3.

The thermally insulating cover 5 differs from that of the embodiment shown in Figure 1 in that the inner portion in this case is a flat apertured member and the outer portion is a cylindrical, upwardly extending rim attached to the inner portion. Moreover, the rim has an external screw thread 17 which screw threadably cooperates with an internal thread 18 on the lining 2 to clamp the upper end of the pliable foil 14.

The cover comprises an upper section 5a of flame resistant material, such as metal or porcelain, on a lower section 5b of thermally insulating material, such as plastics or wood. The covers illustrated in Figures 1 and 3 may be of the same construction.

The spring 6 of either of the above described embodiments could be replaced by any other appropriate device for moving the candle towards the upper end of the casing.

Thermally conducting wires 20 extend from the region of the flame 8 underneath the cover 5 as in the embodiment of Figure 1.

Apertures 22 in the cover 5 allow molten wax to pass from the beneath the cover to the surface. Additional wicks may be provided, extending through the apertures 22, which may be widened for this purpose. Also the bamboo rod 10 may be replaced by a coiled spiral 21 as in Figure 1.

Figure 3 shows a third embodiment in which a cover plate 24 has dished upper and lower surfaces 24a, 24b of generally hemispherical shape. The upper surface 24a ensures that molten wax collects in the centre around the candle flame 8, and the lower surface 24b guides the molten was 25 upthrough the central aperture 26. The cover 24 has an H-shaped cross section at its outer edge, the downwardly pointing legs of the H enclosing the sides of a container 39 which houses a spring, shown schematically at 87 and a candle body 3 at its upper end. The candle body 3 is enclosed in a compressible lining 27 as in the embodiment of Figure 2 and is supported by a plate 28 on top of the spring, so as to move upwardly as described previously in connection with Figure 2. A plate 29 is positioned beneath the spring 27.

An annular seal 30, of rubber of fibre or the like, is positioned at the top of the inner container 26 to prevent molten wax seeping out past the legs of the cover 24.

A decorative outer container 31 surrounds the device.

The cover 24 has a conical coil 32 supporting a wick 35. The coil is supported by metal hooks 31 set in the wall of the aperture 35.

As seen in Figure 4, a plurality of outer apertures 35 is provided. These may each support a coil 32 and a respective wick 33 or some fireworks (not shown in

Figure 4) on hooks 34.

Figure 4 shows the path of thermally conducting wires 36 which extend below the cover, under the surface 24b to conduct heat from around the flame 8 to the outer edges of the candle.

The coil 32 may take on a number of shapes, for example, generally cylindrical, an inverted cone shape with the upper end spiralling inwardly in a plane to support the wick at its centre, or a double cone shape tapering to its upper and lower ends.

The H-shape cross-section outer rim 84 may be formed separately to the inner dished portion 85, the inner dished portion sitting within the rim as indicated by the dotted lines in Figure 3. The rim serves to protect the upper edge of the outer casing 31.

The inner casing is preferably of thermally insulating material.

The compressible lining 27 is preferably sandwiched between a limb of H-shape cross-section and the inner casing 39.

As the candle melts and is raised the lining compresses in concertina fashion (see Figure 2). The lining serves to retain the molten wax and is particularly useful towards the end of the candle life, holding a pool of molten wax beneath the cover 24.

The use of the lining 27 forms another aspect of the invention.

In place of a wick embedded in the wax body, a replaceable wick may be used, the wick being supported in the spiral 32.

The H-shape cross-section rim is particularly useful for small diameter candles to protect the outer casing 31.

A metal support 86 may be located between the upper limbs of the H-shape cross-section rim to support a glass cover (not shown). The support 86 is omitted from Figure 4 for clarity.

The means for urging the candle upwardly may take a number of forms.

Figure 5 shows a bellows 40 which is filled with compressed air and supports a plunger 41 which slides in a collar 42 and supports a candle body 43. The upper end of the candle body 43 and container 44 are capped by a cover as described in previous embodiments.

As the candle wax is burnt the weight on the bellows 4 reduces so the bellows expands to urge the candle up. A fixed amount of air may be kept in the bellows.

Figure 6 shows an arrangement in which a flexible elastic diaphragm 50 supports the bottom of plunger. A fixed quantity of liquid is contained beneath the diaphragm. As the weight of the candle 43 decreases the diaphragm relaxes, returning eventually to a planar condition at line 51, the liquid displaced by the plunger 41 being raised above line 51 to counter the weight of the plunger and candle as a candle is placed on the plunger.

Figure 7 shows a system in which a candle 61 in a container 62 is raised by a motor 63 which winds a string or wire 64 about an axle 65, the string passing around pulleys or eyelets 66. The motor may be controlled to raise the container 62 at a particular rate, e.g. 2mm in 15 minutes, or it may be operated by sensors which detect, for example, the height of the surface of the melted wax. A temperature sensor may be placed at the top of the container to indicate when the candle has been lit and to switch on the motor.

Figure 8 shows another embodiment of the invention. A bent tube 71 houses a candle 72 which is in cylindrical segments 73. Tube 71 may be of any suitable material, such as metal, plastics, porcelain, cardboard.

The tube 71 is capped by a cover 73 of the type described previously but a single aperture is illustrated. A single aperture is found suitable for candles of smaller diameter. For larger diameters a plurality of apertures, or a radially extending slot or slots may be provided.

A spring 74 bears on two spheres 75 via a plate 76. A cup 77 rests on the upper sphere 75a and bears against the candle 72.

Wires 78 extend down the inside wall of the tube 71 from the region of the wick 79 in aperture 80. The wires 78 conduct heat down the the bend 81 in the tube to soften the periphery of the wax cylinders 72 so that they are urged past the bend 81 by the spring 76.

The spheres 75 will pass around the bend, transmitting the force of the spring 76, without the spring having to turn the bend.

For a larger bend, or greater distance above the bend more spheres may be used.

In another form each cylinder 72 comprises an outer skin of low melting point wax which is more easily softened at the bend which may be some distance from the burning wick 79.

As indicated at 72a a cylinder may comprise two wedge shape pieces of wax at different melting points, the inner wedge shape 82 having a higher melting point than the outer wedge 83.

To facilitate insertion of the candle the tube 71 may be formed in two parts joined at the bend 81, for example by a screw fitting or bayonet connection.

Various modifications will be apparent to those skilled in the art and it is desired to include all such modification as fall within the scope of the accompanying claims.

CLAIMS

1. A cover for a candle, comprising a thermally insulating plate adapted to cover an upper surface of the candle, the plate having an aperture or slot through which the candle wick projects.

2. A cover as claimed in claim 1, comprising means for conducting heat from the region of the candle wick to beneath the cover.

3. A cover as claimed in claim 1 or 2, having a spiral for supporting the candle wick and conducting heat from the region of the candle wick.

4. A cover as claimed in claim 3, wherein the spiral is of thermally conducting material, such as metal wire.

5. A cover as cliamed in claim 3 or 4, wherein the spiral is supported on hooks embedded in the wall of the aperture or slot.

6. A cover as claimed in claims 1, 2, 3 or 4, wherein the means for conducting heat comprises a wire extending from the aperture or slot to the peripheral

region of the candle beneath the cover.

7. A cover as claimed in any one of the claims 1 to 5, comprising a plurality of apertures for the passage of molten wax from beneath the cover to above it.

8. A cover as claimed in any one of claims 1 to 6, wherein the upper surface of the cover is dished so that molten wax collects about the candle wick.

9. A cover as claimed in any one of claims 1 to 7, wherein the lower surface of the cover is dished to direct molten wax from beneath the cover to the wick.

10. A cover as claimed in any one of cliams 1 to 8, comprising an upper layer of flame resistant material and a lower layer of thermally insulating material.

11. A candle device comprising a candle housed in a container, and a cover as defined in any one of claims 1 to 9, located on top of the container, wherein means is provided to urge the candle upwardly to the cover.

12. A device as claimed in claim 10, wherein the urging means comprises a spring.

13. A device as claimed in claim 10, wherein the urging means comprises a sealed bellows supporting the candle the bellows being compressed by the weight of the candle and expanding to raise the candle as the candle weight is reduced.

14. A device as claimed in claim 10 wherein the urging means comprises a flexible elastic diaphragm, the candle being supported on one side of the diaphragm and substantially in compressible fluid being held on the other side of the diaphragm.

15. A device as claimed in claim 10, wherein mechanical means is provided for urging the candle upwardly.

16. A device as claimedin any one of claims 10 to 14, wherein the candle is encased in a flexible casing.

17. A candle device comprising a candle housed in a bent or curved tube and means for urging the candle along the tube as the candle is burnt to maintain the flame of the burning candle at a substantially constant position.

18. A device as claimed in claim 16, wherein the means for urging the candle along the tube comprises a sphere at an end of the candle distal of the flame.

19. A device as claimed in claim 18, wherein a plurality of spheres is provided.

20. A device as claimed in claims 17, 18, or 19, wherein the means for urging the candle along the tube comprises a spring.

21. A device as claimed in any one of claims 17 to 19, comprising a cover as defined in any one of claims 1 to 9.

22. A device as claimed in any one of claims 17 to 21, comprising means for conducting heat from the region of the wick to the periphery of the candle at the bend or curve of the tube.

23. A device as claimed in any one of claims 17 to 22, wherein the candle comprises a plurality of cylindrical segments.

24. A device as claimed in claim 23, wherein each segment comprises two wedge shaped portions of different melting points.

25. A device as claimed in any one of claims 17 to 23, wherein the candle has an outer layer of lower melting point wax.

26. A candle encased in a thin flexible casing.

27. A candle as claimed in claim 24, wherein the casing is of metal foil or plastics.

28. A cover for a candle, substantially as hereinbefore described with reference to Figure 1, Figure 2, Figure 3 or Figure 4 of the accompanying drawings.

29. A candle device substantially as hereinbefore described with reference to any one of the accompanying drawings.

Printed in the UK for HMSO, D8818935, 10/86, 7102.
Published by The Patent Office, 25 Southampton Buildings, London, WC2A 1AY, from which copies may be obtained.