Oct. 24, 1967 S. A. HAWK 3,348,521

AUTOMATIC TONER CONTROL SYSTEM

Filed April 7, 1965 2 Sheets-Sheet 1

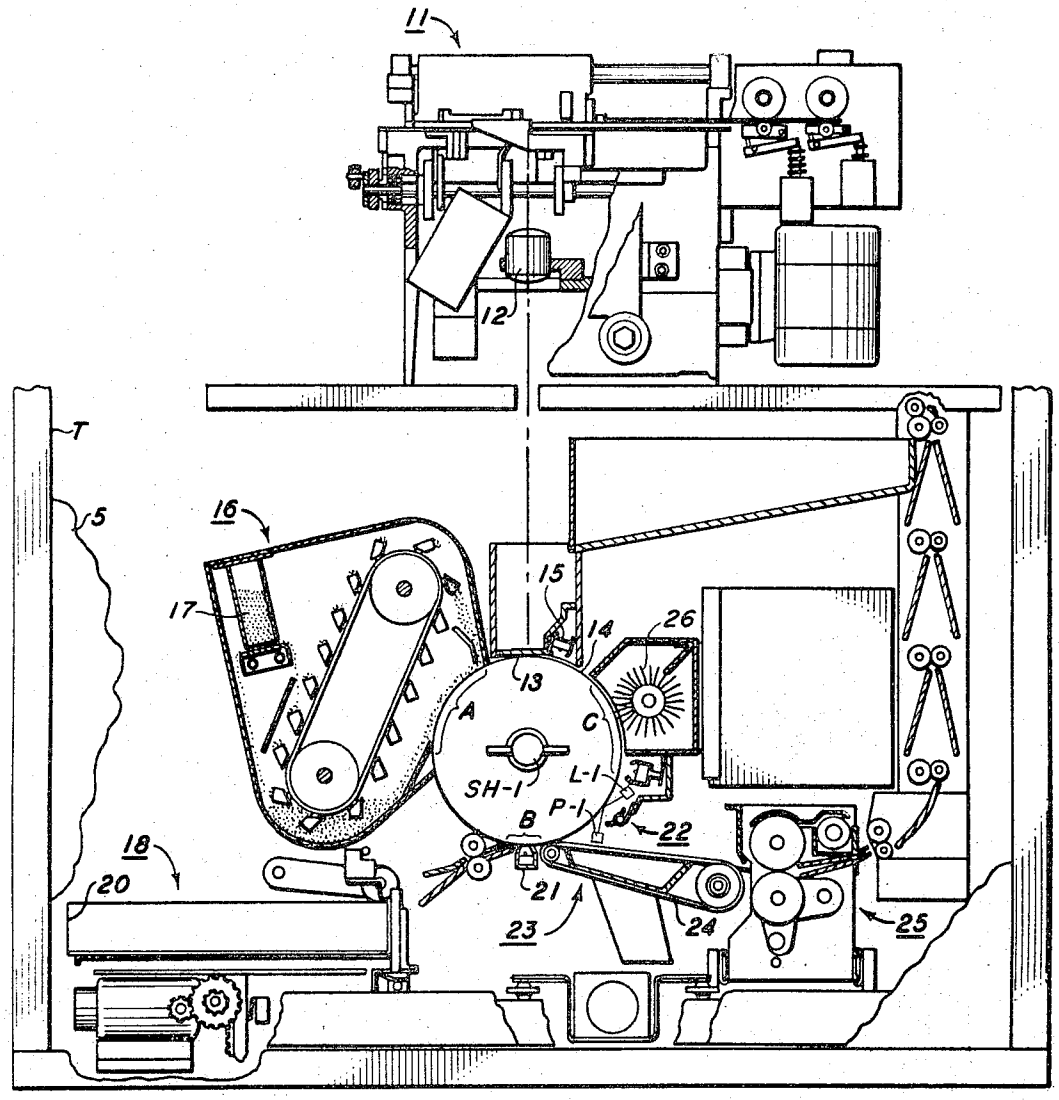

FIG. 1

INVENTOR
SAMUEL A. HAWK

BY Norman C. Schroeder
B. Chance

ATTORNEYS

Oct. 24, 1967 S. A. HAWK 3,348,521

AUTOMATIC TONER CONTROL SYSTEM

Filed April 7, 1965 2 Sheets-Sheet 2

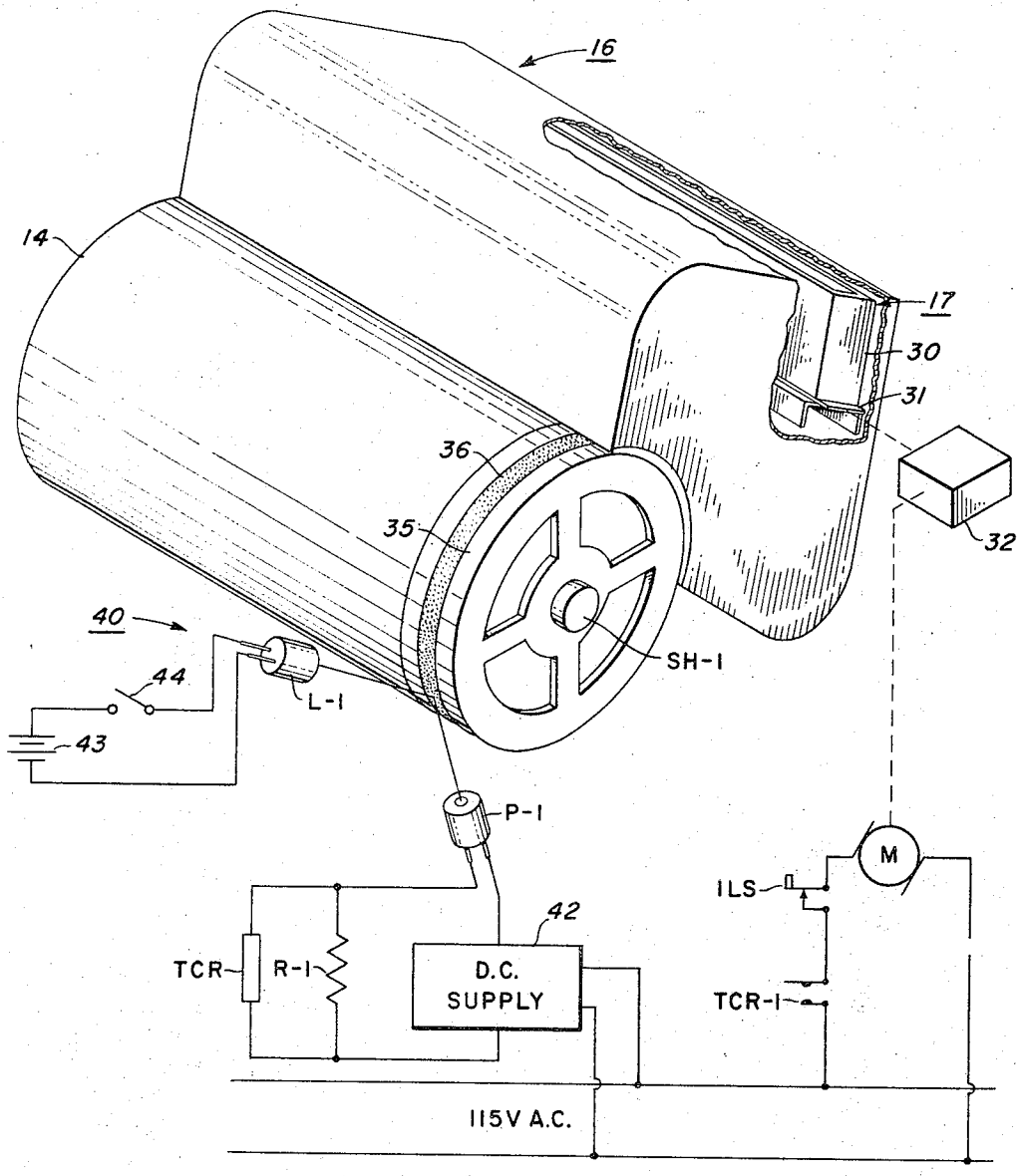

FIG. 2

INVENTOR
SAMUEL A. HAWK

BY

ATTORNEYS

United States Patent Office

3,348,521

Patented Oct. 24, 1967

3,348,521

AUTOMATIC TONER CONTROL SYSTEM

Samuel A. Hawk, Columbus, Ohio, assignor, by mesne assignments, to Xerox Corporation, Rochester, N.Y., a corporation of New York

Filed Apr. 7, 1965, Ser. No. 446,349

1 Claim. (Cl. 118—7)

ABSTRACT OF THE DISCLOSURE

Apparatus for controlling the toner in a developer mechanism in response to a uniform control image developed thereby.

This invention relates to improvements in toner dispensing devices and particularly to improvements in the automatic control of these devices to maintain the image density constant during the making of xerographic reproductions.

The present invention avoids the disadvantages of manual control for dispensing toner particles into developing material used in xerographic processing equipment. This method of control is generally based upon guess-work by the operator who must continually observe the reproduction copy quality in order to maintain a reproduction run that is fairly constant in regard to image density. For automatic xerographic processing wherein large production runs are frequent, an experienced operator must be in attendance to insure good control.

Therefore, the principal object of the invention is to control toner dispensing automatically in xerographic processing systems. A further object of the invention is to maintain consistency in image quality during xerographic processing. Another object of the invention is to determine and maintain the proper ratio of toner-to-carrier in xerographic developing material.

These and other objects of the invention are attained by means of a control circuit utilized in conjunction with a toner dispensing device for dispensing toner into the developing apparatus in accordance with the density of a developed image upon a xerographic plate. A test or comparison electrostatic image is formed or used in conjunction with the xerographic plate. This image is developed along with the image of a document being reproduced by the xerographic machine. A sensing device in the form of a photocell is also provided for receiving light rays reflected from the developed comparison image, and this serves to control conduction or current flow in a control circuit. A relay is arranged in the circuit and is adapted to connect a toner dispenser motor or actuator to a source of electrical power and a switching circuit which limits the energization of the motor to a predetermined cycle of operation.

A preferred form of the invention is shown in the accompanying drawings in which:

FIG. 1 is a schematic sectional view of a typical xerographic machine embodying the principles of the invention; and

FIG. 2 is a schematic illustration of a toner dispensing arrangement and a sensing device applied to a xerographic drum and the associated circuitry.

For a general understanding of a typical xerographic processing system in which the invention may be incorporated, reference is had to FIG. 1 in which various

components of a typical system are schematically illustrated. As in all xerographic systems, a light image of copy to be reproduced is projected onto the sensitized surface of a xerographic plate to form an electrostatic latent image thereon. Thereafter, the latent image is developed with an oppositely charged developing material to form a xerographic powder image, corresponding to the latent image, on the plate surface. The powder image is then electrostatically transferred to a support surface to which it may be fused by a fusing device, whereby the powder image is caused permanently to adhere to the support surface.

In the system disclosed herein, minified data cards are placed in a card magazine from which they are fed seriatim to a card carriage in a card handling apparatus, generally designated by reference character **11**. Suitable driving means are provided for the card carriage whereby it is caused to move the card past the optical axis of a light projecting system for the purpose of scanning the minified data across a scanning light. The illuminated card is projected downwardly by means of an objective lens assembly **12** and through a variable slit aperture assembly **13** and onto the surface of a xerographic plate in the form of a drum **14**.

The xerographic drum **14** is detachably secured to a shaft SH–1 mounted in suitable bearings in the frame of the machine and is driven in a counterclockwise direction by a motor at a constant rate that is proportional to the scan rate for the minified data card, whereby the peripheral rate of the drum surface is identical to the rate of movement of the reflected light image. The drum surface comprises a layer of photoconductive material on a conductive backing that is sensitized prior to exposure by means of a corona generating device **15**.

The exposure of the drum to the light image discharges the photoconductive layer in the areas struck by light, whereby there remains on the drum an electrostatic latent image in configuration corresponding to the light image projected from the minified data card. As the drum surface continues its movement, the electrostatic latent image passes through a developing station A in which there is positioned a developer apparatus including a casing or housing **16** having a lower or sump portion for accumulating developing material. A bucket-type conveyor having a suitable driving means may be used to carry the developing material to the upper part of the developer housing where it is cascaded down over a hopper chute onto the xerographic drum.

As the developing material is cascaded over the xerographic drum, toner particles are pulled away from the carrier component of the developing material and deposited on the drum to form powder images, while the partially-denuded carrier particles pass off the drum into the developer housing sump. As toner powder images are formed, additional toner particles must be supplied to the developing material in proportion to the amount of toner deposited on the drum. For this purpose, a toner dispenser generally designated **17** is used to accurately meter toner to the developing material. Although any one of a number of well-known powder or granulated material dispensers may be used, the toner dispenser shown is of the type disclosed in Patent No. 3,062,109, issued to Mayo et al.

Positioned next and adjacent to the developing station is the image transfer station B which includes a sheet feeding mechanism adapted to feed sheets of paper suc-

cessively to the developed image on the drum at the transfer station. This sheet feeding mechanism, generally designated **18**, includes a sheet source such as a tray **20** for a plurality of sheets of a suitable transfer material that is, typically, sheets of paper or the like, a separating roller adapted to feed the top sheet of the stack to feed rollers which direct the sheet material into contact with the rotating drum at a speed preferably slightly in excess of the rate of travel of the surface of the drum in coordination with the appearance of the developed image at the transfer station. In this manner, the sheet material is introduced between the feed rollers and is thereby brought into contact with the rotating drum at the correct time and position to register with the developed image.

The transfer of the xerographic powder image from the drum surface to the transfer material is effected by means of a corona transfer device **21** that is located at or immediately after the point of contact between the transfer material and the rotating drum. The corona transfer device **21** is substantially similar to the corona discharge device **15** in that it includes an array of one or more corona discharge electrodes that are energized from a suitable high potential source and extend transversely across the drum surface and are substantially enclosed within a shielding member.

In operation, the electrostatic field created by the corona discharge device is effective to tack the transfer material electrostatically to the drum surface, whereby the transfer material moves synchronously with the drum while in contact therewith. Simultaneously with the tacking action, the electrostatic field is effective to attract the toner particles comprising the xerographic powder image from the drum surface and cause them to adhere electrostatically to the surface of the transfer material.

Immediately subsequent to the image transfer station is positioned a transfer material stripping apparatus or paper pick-off mechanism, generally designated **22**, for removing the transfer material from the drum surface and, to direct it onto a horizontal conveyor **23** having an endless conveyor **24**, whereby the sheet material is carried to a fixing device in the form of a fuser assembly **25**, whereby the developed and transferred xerographic powder image on the sheet material is permanently fixed thereto.

After fusing, the finished copy is preferably discharged from the apparatus at a suitable point for collection externally of the apparatus.

The next and final station in the device is a drum cleaning station C, having positioned therein a corona pre-cleaning device similar to the corona charging device **15**, to impose an electrostatic charge on the drum and residual powder adherent thereto to aid in effecting removal of the powder and, a drum cleaning device in the form of a rotary brush **26** adapted to remove any powder remaining on the xerographic drum.

In general, the electrostatic charging of the xerographic drum in preparation for the exposure step and the electrostatic charging of the support surface to effect transfer are accomplished by means of corona generating devices whereby electrostatic charge on the order to 500 to 600 volts is applied to the respective surface, in each instance. Although any one of a number of types of corona generating devices may be used, a corona charging device of the type disclosed in Vyverberg Patent 2,836,725 is used for both the corona charging device **15** and the corona transfer device **21**, each of which is secured to suitable frame elements of the apparatus and connected to a suitable electrical circuit.

Referring now to FIG. 2, the toner dispenser **17** consists of a hopper or container **30** for the toner particles to be dispensed. Although the hopper or container **30** may be made in any size or shape, the hopper shown is formed as a rectangular open-ended box having vertical side and end walls.

The bottom wall of the hopper **30** may comprise a sliding perforated plate **31** adapted for sliding movement longitudinally of the hopper for metering the flow of toner from the hopper. The toner thus dispensed is mixed with the developing material in the developer housing **16** to become almost immediately effective in the developing process. The metering provided by the plate **31** may be controlled by a mechanical device, generally indicated by the reference numeral **32**, such as a cam plate or linkage system which converts rotary motion to reciprocable movement. Preferably, a single revolution of a rotary element in the device **32** will produce one reciprocable cycle of the plate **31**, thereby insuring the dispensing of predictable quantities of toner.

In the operation of the toner dispenser, a supply of toner particles is placed within the hopper, the hopper walls and the dispensing plate **31** forming a reservoir for the toner particles. Upon reciprocation of the plate **31** by the device **32**, a metered quantity of toner particles will be permitted to cascade through the openings in the plate where they will fall to the reservoir portion of the housing **16**.

Since the toner dispenser **17** dispenses a uniform quantity of toner for a given strokelength of the metering plate **31**, it is apparent that the quantity of toner delivered by the toner dispenser may be varied by either varying the length of stroke or by varying the number of strokes per actuation of the device **32**.

In order to control the dispensing of toner from the toner dispenser **17**, there is shown in FIG. 2 the details of an automatic toner control system which ultimately imparts rotation to the rotary element in the device **32** in single revolution step-by-step operation in accordance with the density of the developed image on the drum **14**. Bascially, the automatic toner dispensing system comprises an electrostatic or dielectric coated plate in the form of a drum of short axial length, of the same diameter as the drum **14** and secured to the end thereof; a sensing device for generating a signal in accordnace with the relative density of the developed stripe and; an electrical circuit for utilizing the signal for imparting reciprocation of the plate **31** on the toner dispenser.

As shown in FIG. 2, a drum **35** of short axial length and of the same diameter as the drum **14** is mounted on the shaft SH–1 for rotation therewith. To accomplish this rotation, the xerographic drum and the drum **35** are secured together at their abutting ends whereby rotation of the former will produce corresponding rotation of the latter. The drum **35** has arranged on its surface a xeroprinting plate which is similar to the xerographic plate of the drum **14** except for the charge-dissipating conductive plate that is provided in a xerographic plate.

The xeroprinting plate is provided with a relatively permanent electrostatic latent image in the form of a narrow stripe **36** completely encircling the drum **35**. The image may be produced by a previous operation before the drum **35** is fastened onto the main drum **14** and will remain for a relatively long period of time to be available for continuous operation before requiring renewed charging. This image is continually developed by the developing apparatus **16** along with the images of documents formed on the xerographic plate **14** and is cleaned of residual toner particles by the rotary brush **26**. For these purposes, the developer housing **16** and the cleaning brush **26** may be extended to cover both drums **14** and **35**. Since the electrostatic latent image **36** is intended to be relatively permanent, the various corotrons need be dimensioned only to the size of the images formed on the xerographic drum **14**.

Since the drum **35** and the image **36** are located near one of the extreme ends of the drum **14** remote from the adjacent edge for the copy image area that evolves from use of the drum in the xerographic machine, there is no interference between the exposure elements for the xe-

rographic processing of documents and the stripe image **36**. As previously stated, the only common operative interaction between the electrostatic images involved is the use of the developer mechanism **16** for developing the respective images and the cleaning device **26**.

After the stripe **36** has been developed by the developer apparatus **16** to form a toner powder image of the electrostatic stripe, the stripe is transported by normal rotation of the drum **14**, past a sensing device **40**. In traveling to this point, the toner powder image of the stripe being formed adjacent one end of the drum **14** will be clear of the transfer station **21** and will not be transferred to a support material as is the case for the developed images of a document.

The sensing device **40** includes a lamp shield and a lamp L–1 which, when energized, is adapted to project light rays onto the developed stripe image **36** on the drum surface of an angle relative thereto.

The sensing device also includes a photocell P–1 which is adapted to scan the light rays reflected from the drum surface and direct thereon by the light rays emanating from the lamp L–1. The relative positioning of the photocell is such that it will receive light rays reflected from the area of the stripe. Suitable support means, not shown, may be utilized for mounting the lamp and photocell adjacent the drum **36**.

Electrically, the photocell P–1 is connected to one side of a D.C. power supply **42** and to the other side of the D.C. source by way of a parallel circuit comprising a relay coil TCR and a resistor R–1. In order to energize the relay TCR, the effective resistance of the photocell P–1 must be low enough so that when added to resistance of the parallel circuit will allow or make available sufficient current to energize the relay. This has the effect of rendering the relay TCR sensitive to the voltage drop across the resistor R–1. When the voltage drop is high, as will be produced when the voltage drop across the photocell is low, the current through the relay coil increases. The resistance for the resistor R–1 is chosen so that the relay will pull in when the photocell produces a predetermined voltage drop in accordance with the amount of light scanned by the photocell. In turn, the amount of light reaching the photocell will be determined by the density of the developed electrostatic image **36** as it is scanned by the photocell. In effect, the desired density of the developed image will determine the resistance value of the resistor R–1 in order to cause energization of the relay in the event the density of the image drops below the desired density. To add flexibility to the system and to make the above determinations attainable, it is preferred that the resistor R–1 be variable. With this arrangement, a developed image having a predetermined desired density is brought into scanning view of the photocell. Next, the variable resistor is adjusted until the relay becomes energized. This will establish the parameters for energizing the relay at the desired image density.

As previously stated, to provide the light rays that must reach the photocell P–1 from the developed image **36**, the light source L–1 is connected to a suitable battery **43** with a manually actuable On-Off switch **44** for the lamp. The light source is arranged at an angle relative to the axis of the photocell so that their respective axes intersect on the surface of the drum **35** and within the center of the image **36** when the same has been moved to be scanned by the photocell.

For each energization that is experienced by the relay TCR when the density of the developed stripe image falls below a predetermined level, the relay will produce actuation of normally open contact TCR–1 to its closed position to complete the circuit to the motor M and energization thereof. The shaft for the motor M or the mechanical device **32** may be provided with a cam arrangement (not shown) adapted to actuate a normally closed limit switch 1LS to an open position for a major portion of each revolution of the shaft for the motor M. With the relay TCR being continuously energized during an undertoned condition of the image **36**, the motor M will be intermittently energized to impart intermittent actuation of the mechanical device **32**.

During normal operation of the automatic toner dispensing apparatus, the sensing head lamp L–1 is energized for presenting light upon the stripe **36**. The light reflected from the stripe is sensed by the photocell P–1. The resistor R–1 is adjusted so that the voltage drop across it is low when a properly toned or over-tone image on the stripe **36** is sensed and high when an undertoned image is present. When the density of these areas is high, resulting in a low reflectivity, the resistance of the cell P–1 will be high and the voltage drop across R–1 will be low. On the other hand, when the density is low causing higher reflectivity, the level of the voltage drop across the resistor R–1 will be higher and when it reaches a predetermined level, which serves as an indication of toner demand, the relay TCR will become energized and will remain so for the length of time required to bring the density of the image **36** to its predetermined value. During this energization of the relay, the mechanical device **32** will impart repeated or intermittent actuations to the control plate **31** for dispensing toner into the developer housing **16**. This dispensing of the toner will be in small evenly spaced quantities which will affect the density of the image **36** in the matter of a few dispensing cycles. As the density of the toner on the stripe **36** increases, the voltage drop across the resistor R–1 will lower, thereby terminating further actuation of the toner dispenser.

The toner dispenser **17** functions to sift toner material onto the developing material already present in the developer housing. In order to ensure uniform distribution of new toner to bring the toner-to-carrier back to the desired level in a minimum of time, the toner dispenser extends horizontally substantially across the upwardly moving buckets which are in motion to cascade toner over the drum surface throughout its entire width.

Some of the newly dispensed toner may be caused to deposit on suitable baffle plates. To cause these particles to be mixed with the remaining developing material and thereby ensure adequate mixing of at least a portion of the new toner, narrow slots may be formed in these plates whereby a portion of the material sliding down this plate is caused to pass through the slots and over the surface of the developing material supply at the bottom of the housing.

While the invention has been described with reference to the structure disclosed herein, it is not confined to the details set forth, and this application is intended to cover such modifications or changes as may come within the purposes of the improvements or the scope of the following claim. For example, means for producing a stripe on the xeroprinting plate **35** may be provided on the machine itself, thereby eliminating the need to disassemble the drum **35** from the drum **14** for this purpose.

What is claimed is:

In a xerographic apparatus of the type wherein a latent electrostatic image is placed on a xerographic drum and is made visible by passing the drum through a developer mechanism, a toner dispensing and control apparatus including a toner dispenser for introducing toner material into said developer mechanism, and actuator device associated with said dispensing means for controlling the introduction of toner into the developer mechanism, the improvement comprising

a xeroprinting drum having a permanent electrostatic image formed thereon,

said xeroprinting drum being mounted for rotation with the xerographic drum and positioned so that the xeroprinting drum passes through a charging station and the developer mechanism whereby the permanent control image is developed,

a light source arranged for illuminating the control image developed on said xeroprinting drum,

a light sensitive device arranged to receive light rays reflected from said developed control image and to vary an electrical output in accordance therewith,

means responsive to said output and associated with said actuating device for actuating the same to dispense toner into the developer mechanism when said output reaches a predetermined level.

References Cited

UNITED STATES PATENTS

2,956,487	5/1960	Giaimo	95—1.7
3,094,049	6/1963	Snelling	118—637 X
3,233,781	2/1966	Grubbs	118—9 X

CHARLES A. WILLMUTH, *Primary Examiner.*

PETER FELDMAN, *Assistant Examiner.*