C. F. SMITH.

ENVELOP MACHINE.

APPLICATION FILED DEC. 31, 1909.

1,118,515.

Patented Nov. 24, 1914.

11 SHEETS—SHEET 1.

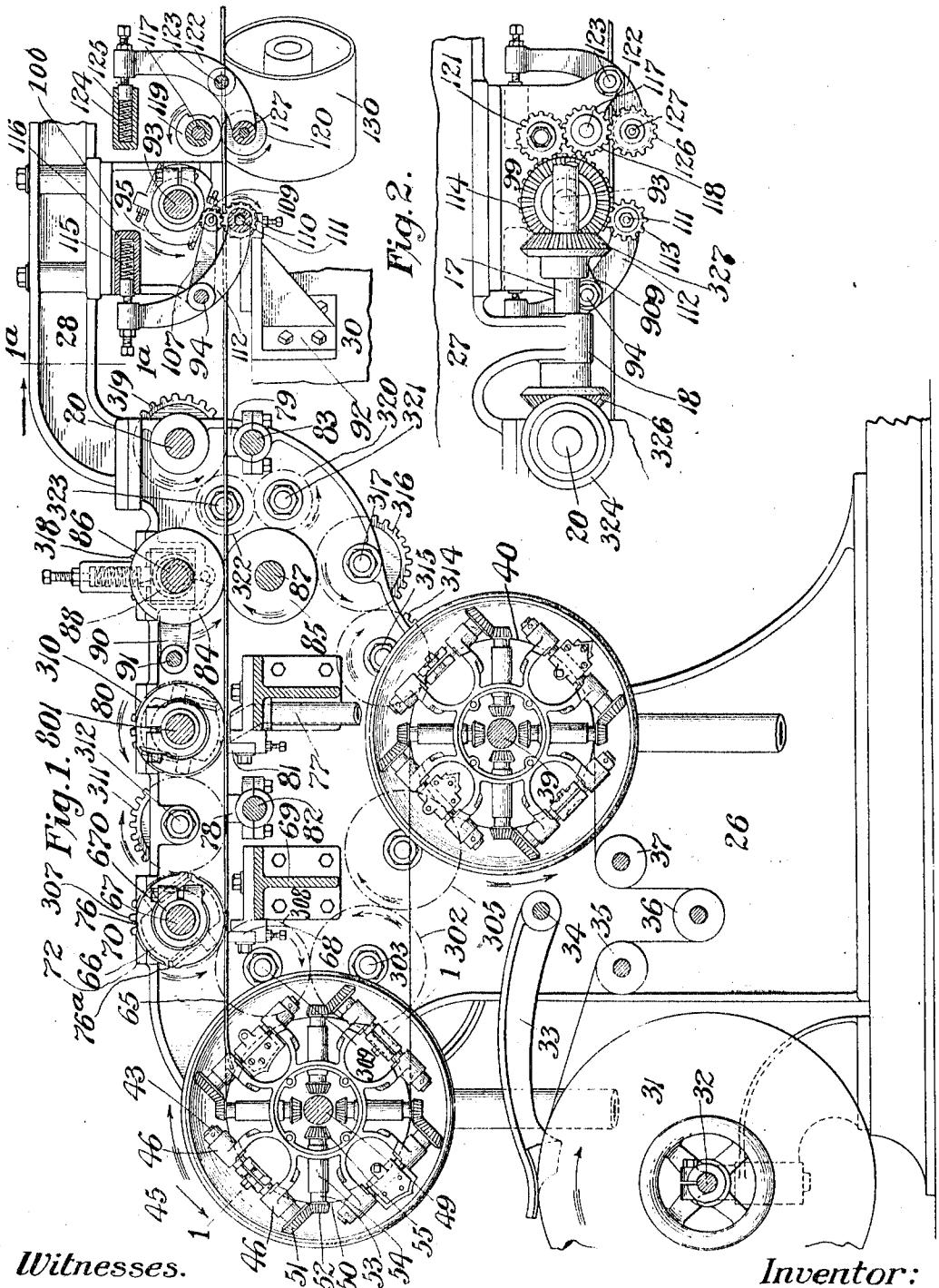

Fig. 1.

Fig. 2.

Witnesses.

Jos. Steiner

Chas. W. La Rue

Inventor:

Charles F. Smith.

by Wrebert M. Stone

Attorney.

C. F. SMITH.

ENVELOP MACHINE.

APPLICATION FILED DEC. 31, 1909.

1,118,515. Patented Nov. 24, 1914.

11 SHEETS—SHEET 2.

Fig. 3.

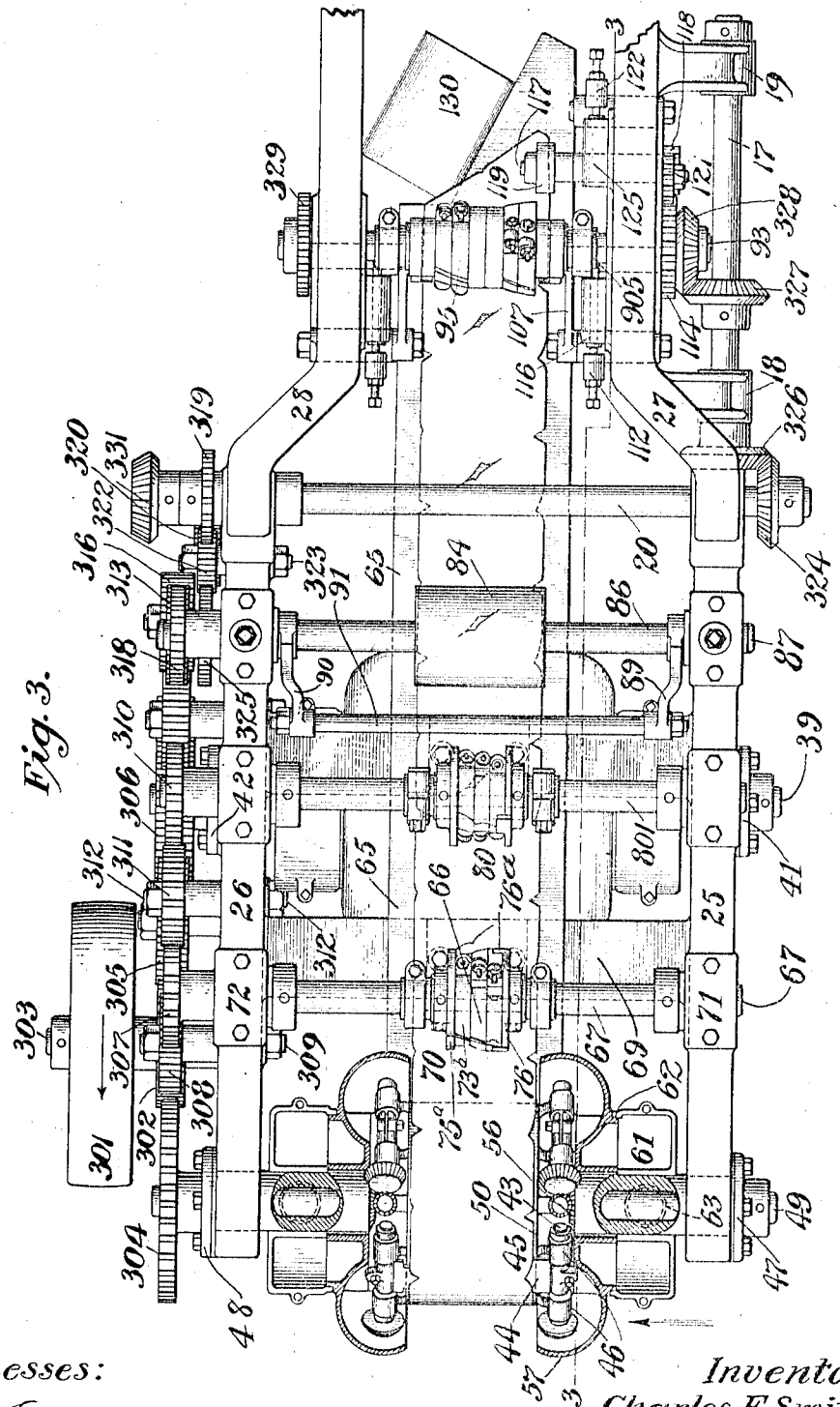

Witnesses:

Jos. L. Amer

Chas. W. La Rue

Inventor:

Charles F. Smith

by Wilbur M. Stone

Attorney.

C. F. SMITH.

ENVELOP MACHINE.

APPLICATION FILED DEC. 31, 1909.

1,118,515.

Patented Nov. 24, 1914.

11 SHEETS—SHEET 3.

Fig. 5.

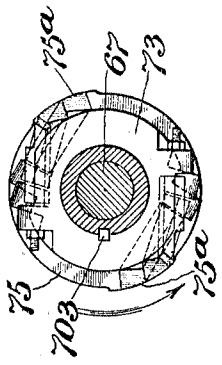

Fig. 6.

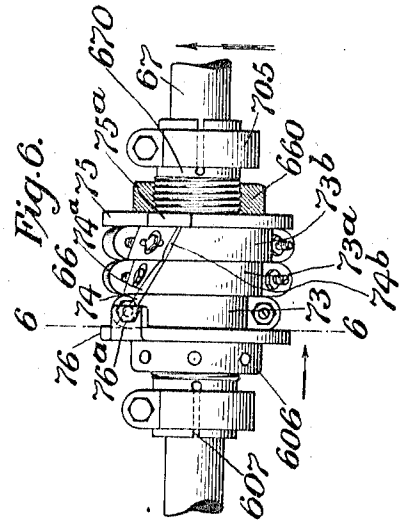

Fig. 4.

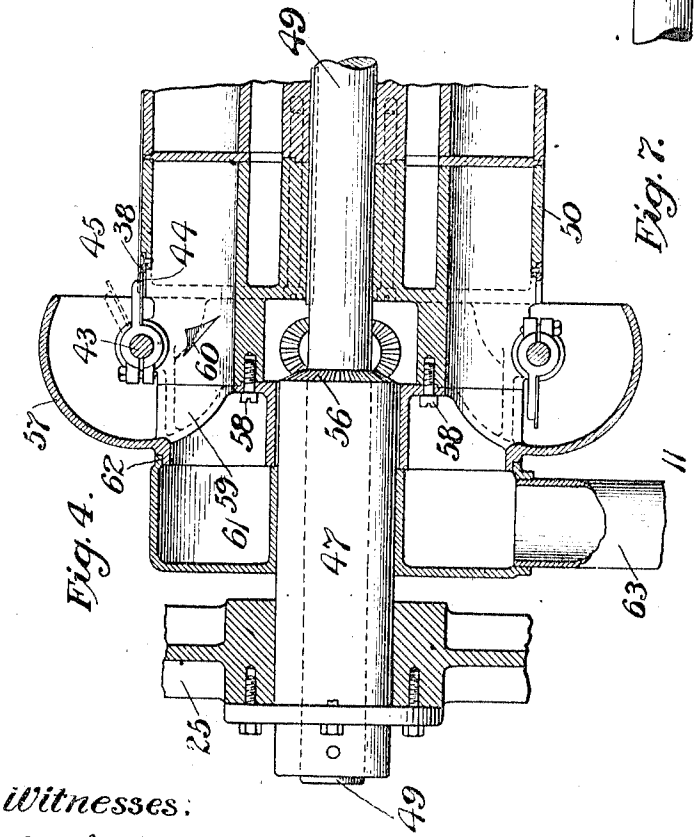

Fig. 7.

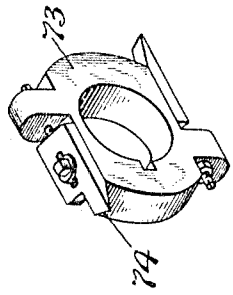

Witnesses:

Jos. I. Diner

Chas. W. La Rue

Inventor:

Charles F. Smith

by Wilbur M. Stone

Attorney.

C. F. SMITH.

ENVELOP MACHINE.

APPLICATION FILED DEC. 31, 1909.

1,118,515. Patented Nov. 24, 1914.

11 SHEETS—SHEET 4.

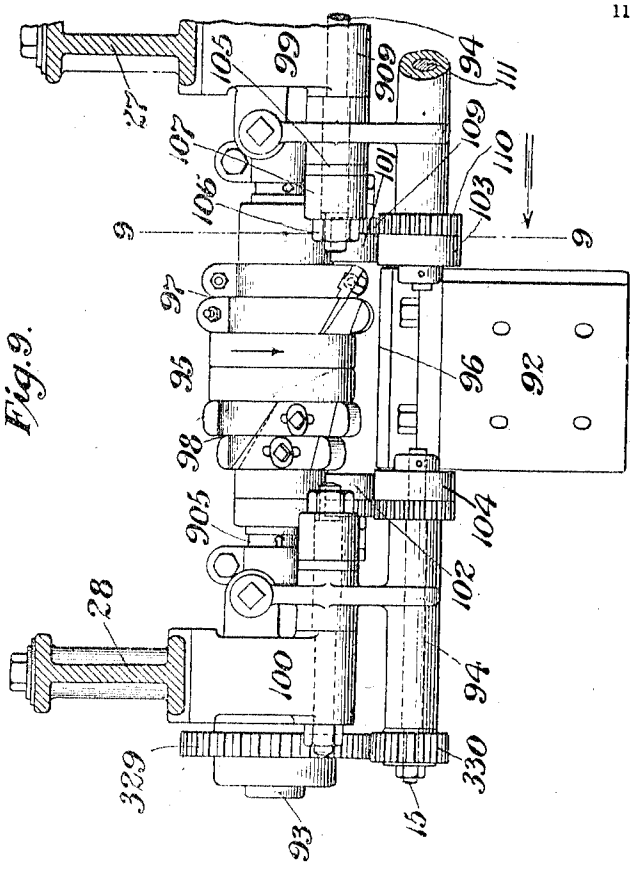

Fig. 9.

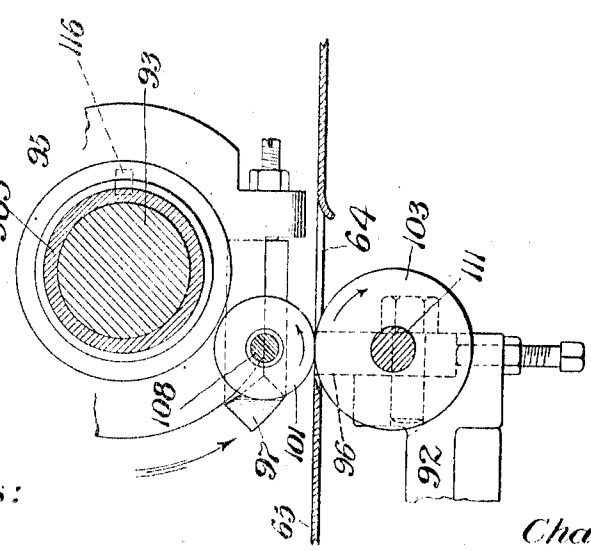

Fig. 8.

Witnesses:

Jos. F. Liner

Chas. W. La Rue

Inventor:

Charles F. Smith

by Wilbur M. Stone

Attorney

C. F. SMITH.

ENVELOP MACHINE.

APPLICATION FILED DEC. 31, 1909.

1,118,515.

Patented Nov. 24, 1914.

11 SHEETS—SHEET 5.

Fig. 11a.

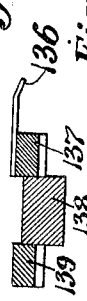

Fig. 11b.

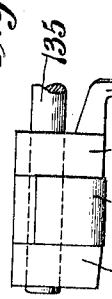

Fig. 11.

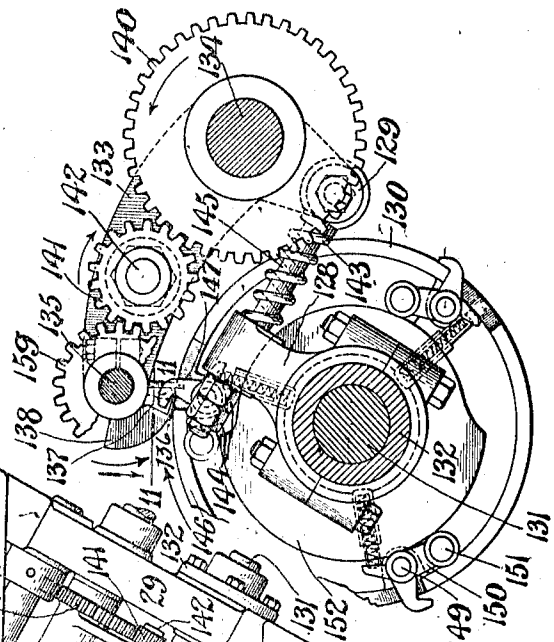

Fig. 10.

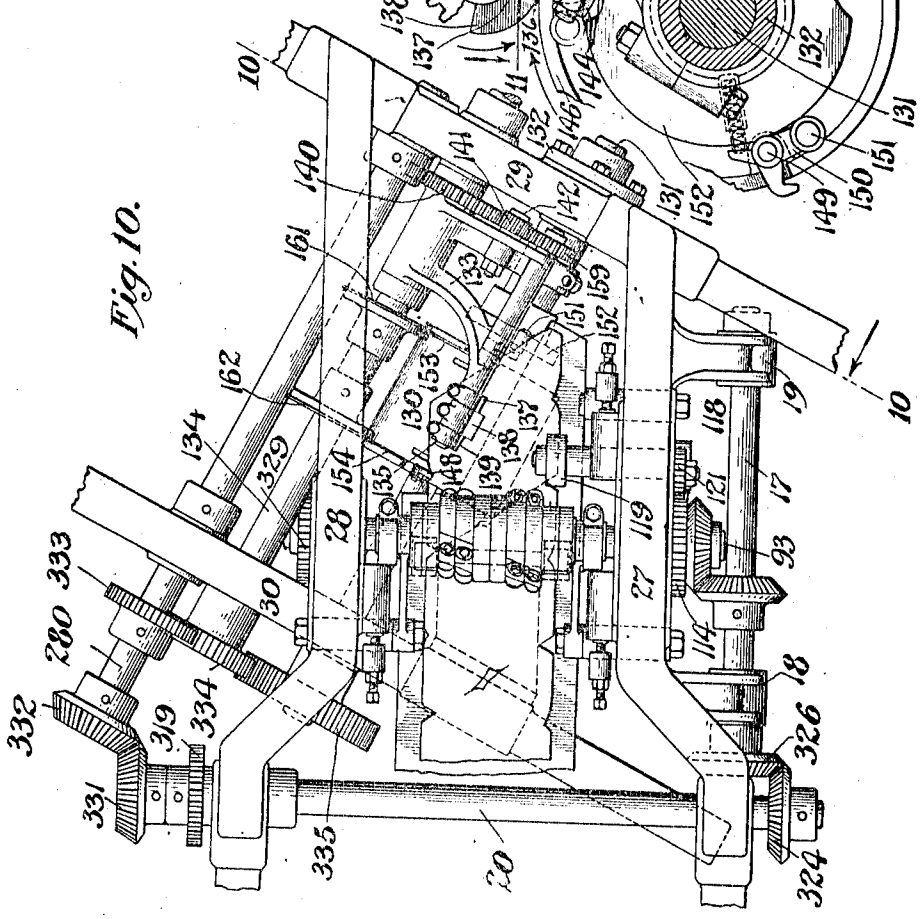

Witnesses:

Jos. L. Amer

Chas. W. La Rue

Inventor:

Charles F. Smith

by Wilbur M. Stone

Attorney

C. F. SMITH.

ENVELOP MACHINE.

APPLICATION FILED DEC. 31, 1909.

1,118,515.

Patented Nov. 24, 1914.

11 SHEETS—SHEET 6.

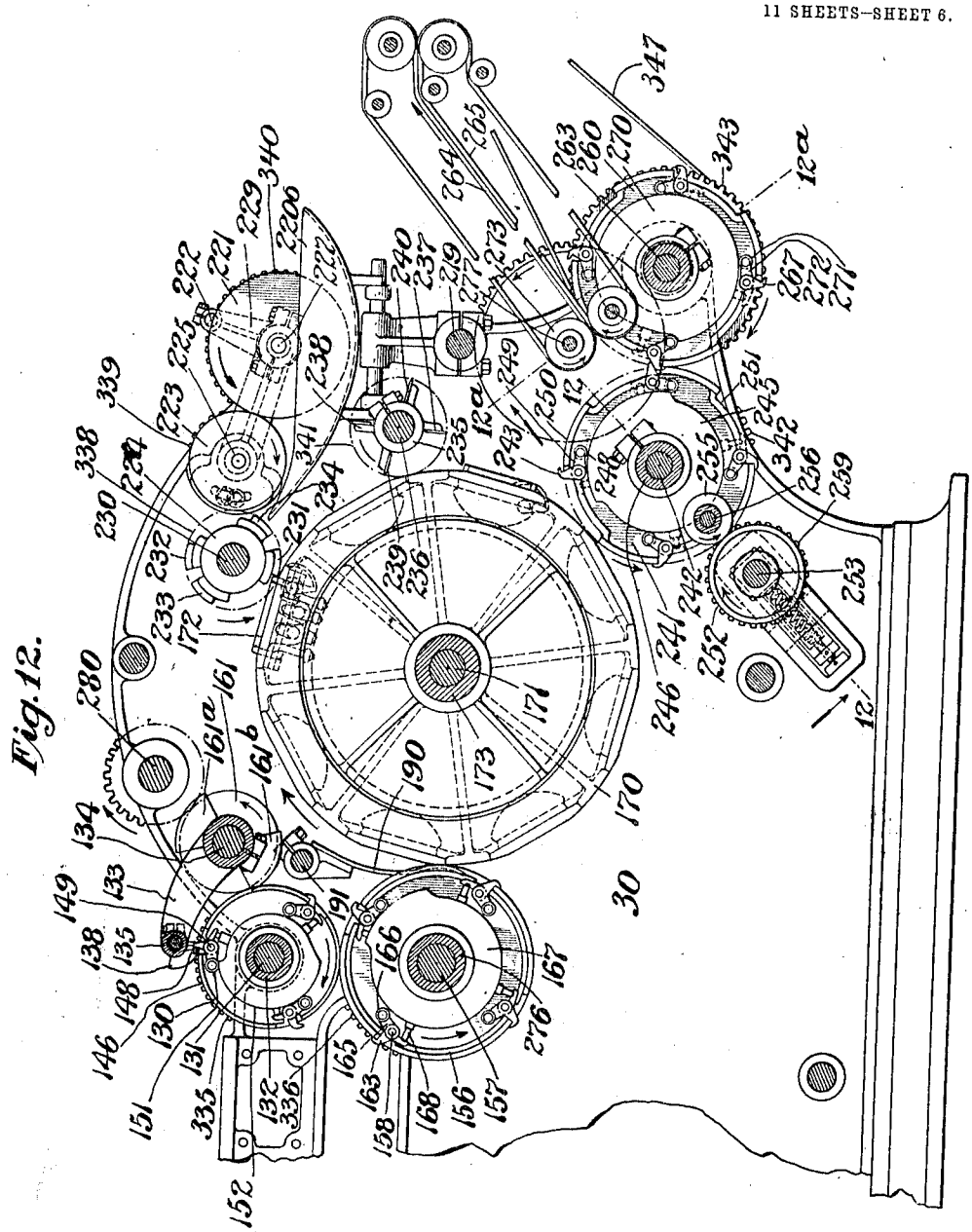

Fig. 12.

Witnesses:

Josiah Tiner

Chas. W. La Rue

Inventor:

Charles F. Smith

by Wilbur McStone

Attorney.

C. F. SMITH.

ENVELOP MACHINE.

APPLICATION FILED DEC. 31, 1909.

1,118,515.

Patented Nov. 24, 1914.

11 SHEETS—SHEET 7.

Fig. 13.

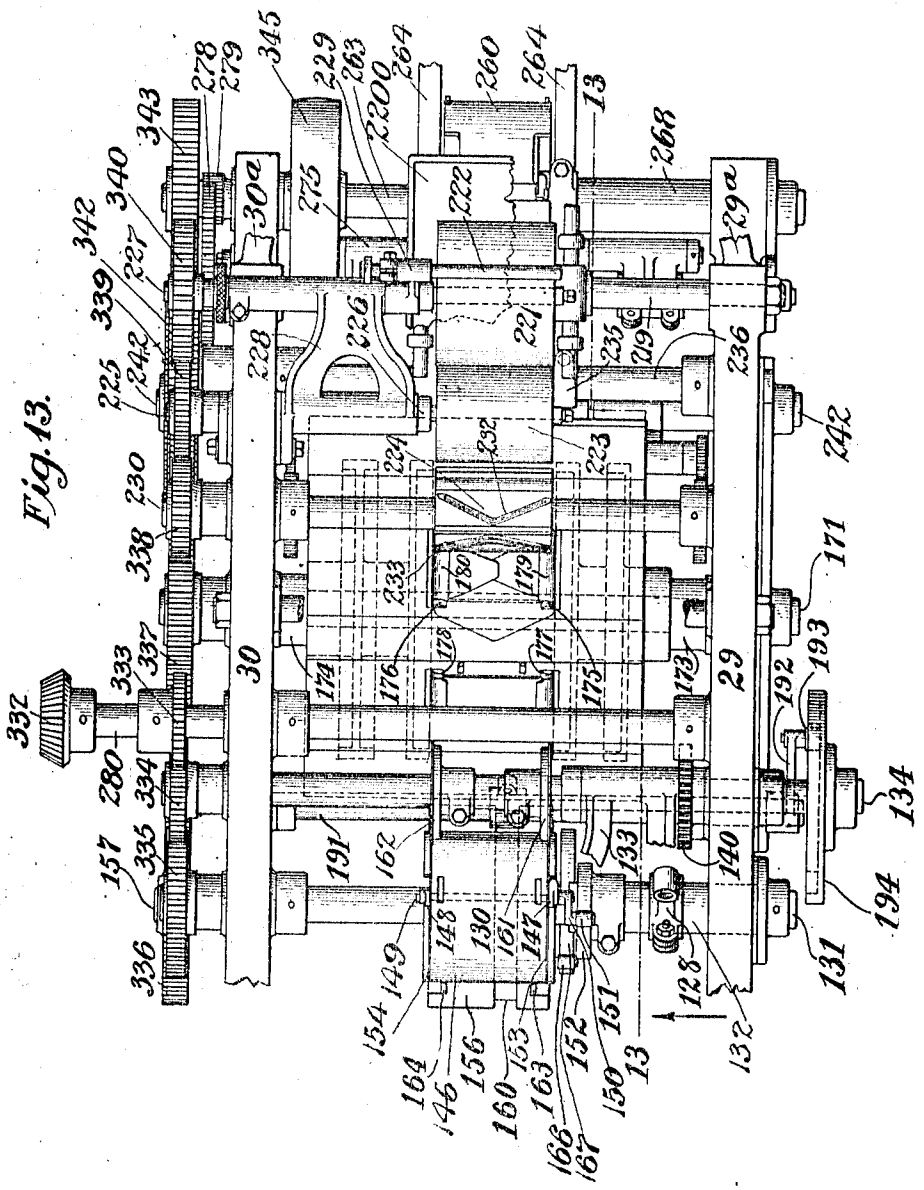

Witnesses:

Jos. Adner

Chas. W. La Rue

Inventor:

Charles F. Smith

by Wilbur M. Stone

Attorney.

C. F. SMITH.

ENVELOP MACHINE.

APPLICATION FILED DEC. 31, 1909.

1,118,515. Patented Nov. 24, 1914.

11 SHEETS—SHEET 8.

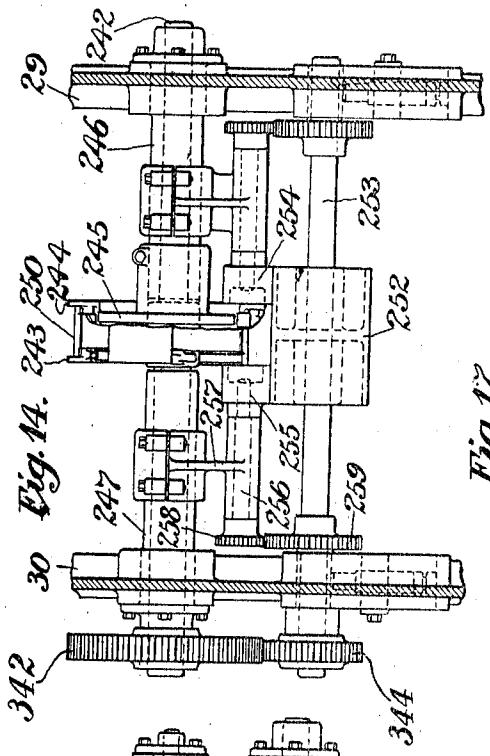

Fig. 14.

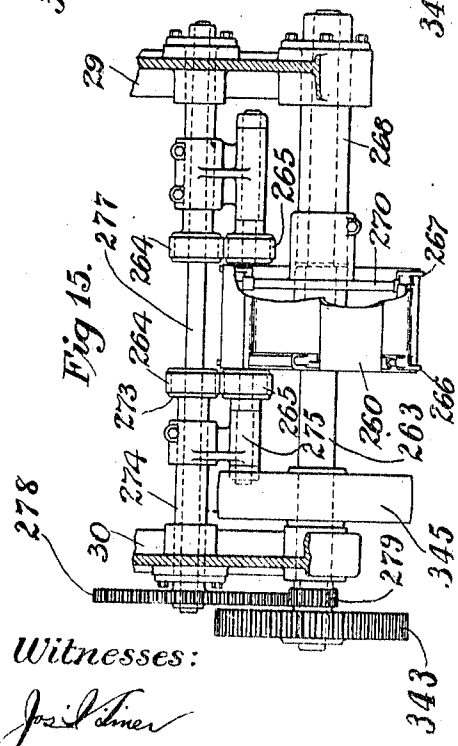

Fig 15.

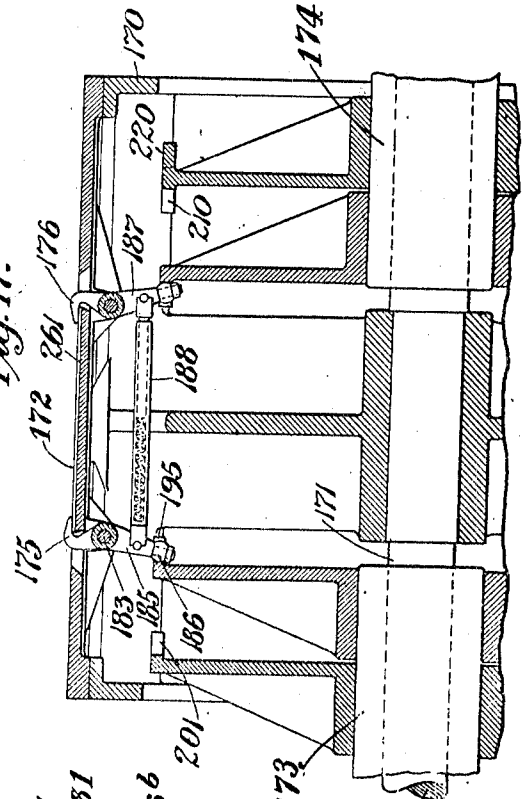

Fig. 17.

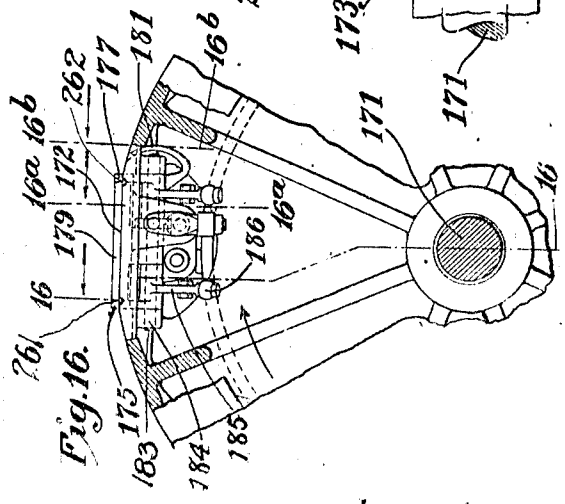

Fig. 16.

Witnesses:

Jos. I. Ulmer

Chas. W. LaRue

Inventor:

Charles F. Smith

by Wilbur M. Stone

Attorney

C. F. SMITH.

ENVELOP MACHINE.

APPLICATION FILED DEC. 31, 1909.

1,118,515.

Patented Nov. 24, 1914.

11 SHEETS—SHEET 9.

Fig. 19.

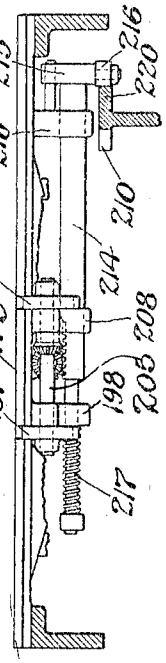

Fig. 18.

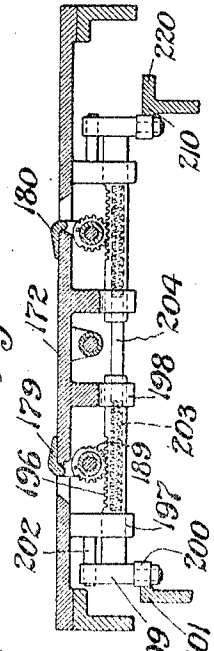

Fig. 20.

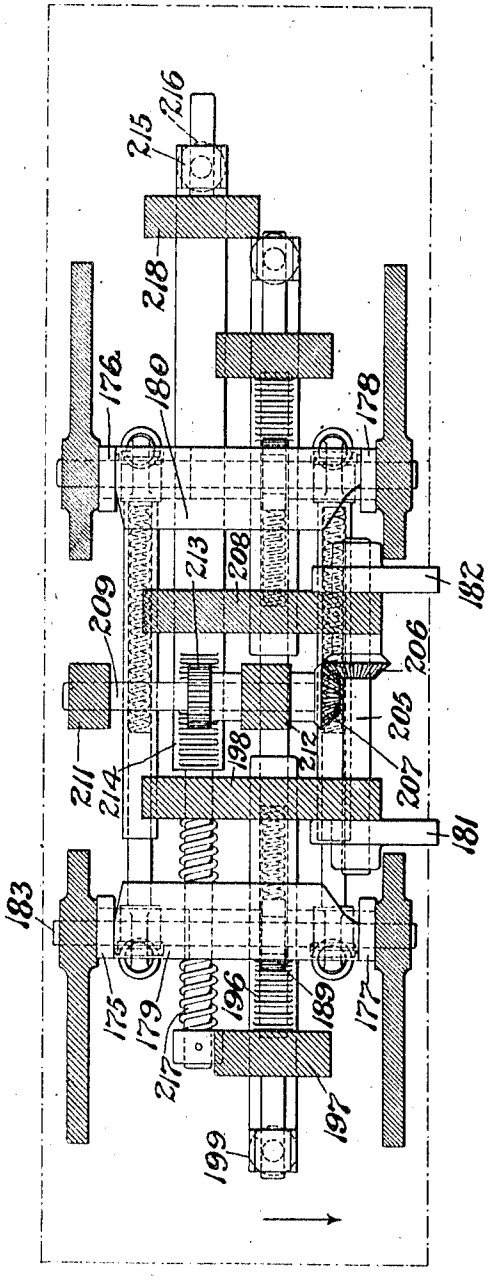

Witnesses:

Jos. Steiner

Chas. W. LaRue

Inventor:
Charles F. Smith
by Wilbur M. Stone
Attorney.

C. F. SMITH.

ENVELOP MACHINE.

APPLICATION FILED DEC. 31, 1909.

1,118,515.

Patented Nov. 24, 1914.

11 SHEETS--SHEET 10.

Fig. 22.

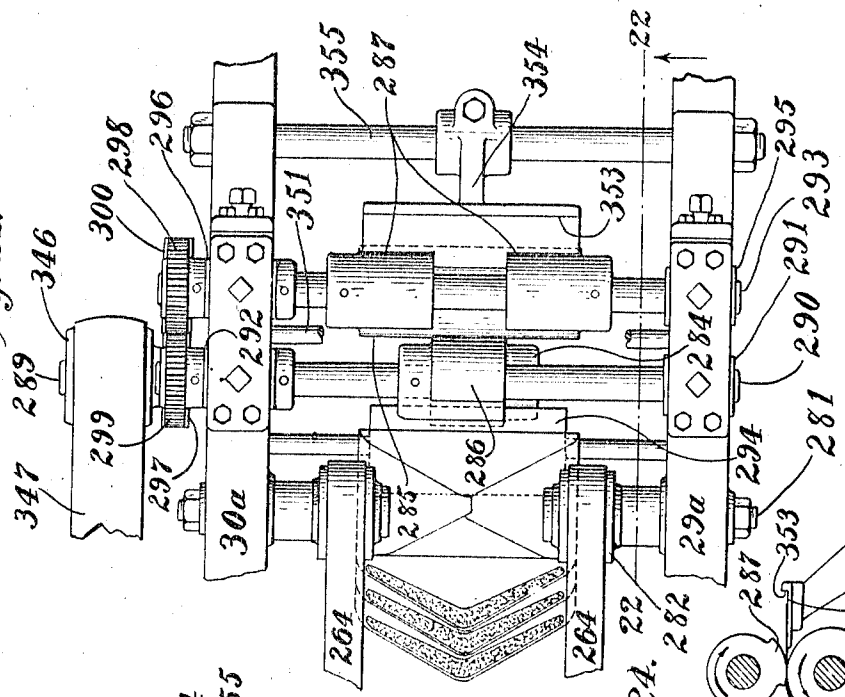

Fig. 21.

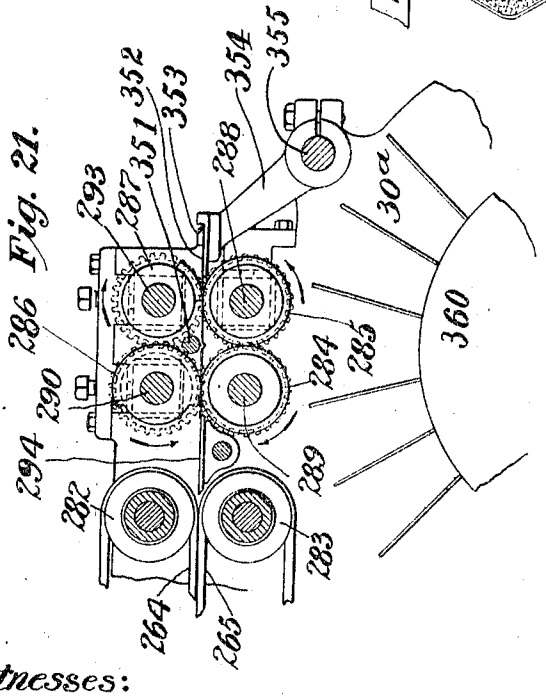

Fig. 24.

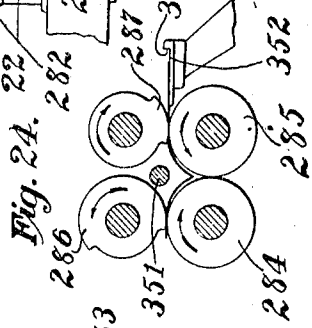

Fig. 23.

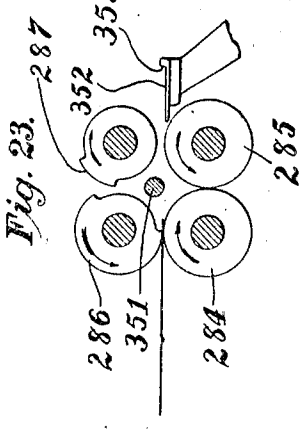

Witnesses:

Jas. L. Amer

Chas. W. LaRue

Inventor:

Charles F. Smith

by Wilbur M. Stone

Attorney.

C. F. SMITH.

ENVELOP MACHINE.

APPLICATION FILED DEC. 31, 1909.

1,118,515.

Patented Nov. 24, 1914.

11 SHEETS-SHEET 11.

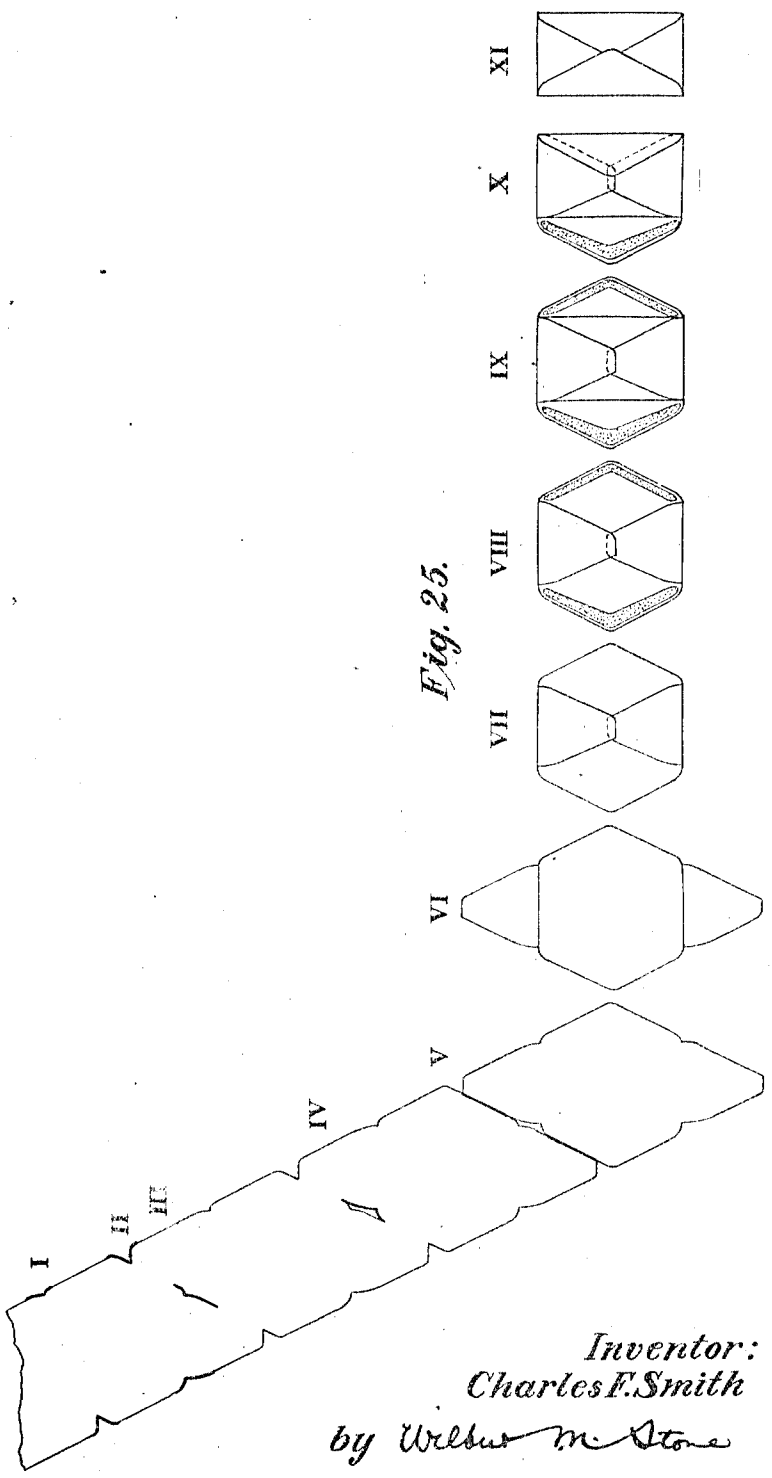

Fig. 25.

Witnesses:

Josiah Siner

Chas. W. La Rue

Inventor:

Charles F. Smith

by Wilbur M. Stone

Attorney.

UNITED STATES PATENT OFFICE.

CHARLES F. SMITH, OF BRIDGEPORT, CONNECTICUT, ASSIGNOR TO MERCANTILE CORPORATION, OF NEW YORK, N. Y., A CORPORATION OF NEW YORK.

ENVELOP-MACHINE.

1,118,515. Specification of Letters Patent. Patented Nov. 24, 1914.

Application filed December 31, 1909. Serial No. 535,750.

To all whom it may concern:

Be it known that I, CHARLES F. SMITH, a citizen of the United States, and a resident of Bridgeport, in the county of Fairfield and State of Connecticut, have invented certain new and useful Improvements in Envelop-Machines, of which the following is a specification.

This invention relates to envelop machines and particularly to that class of rotary perfecting envelop machines which transform a continuous web of paper into blanks and gum and fold those blanks into completed envelops.

The object of my invention is to furnish a machine of the class specified operable at high speed with economy of material and accuracy of result. To these ends my improvements comprise mechanisms and combinations illustrated in their preferred forms in the drawings accompanying this specification.

For convenience of description I have divided my improved machine into three grand divisions as follows: blank making, angular transfer, and folding mechanisms. The blank making mechanism is illustrated in Figures 1 to 9 inclusive; the angular transfer mechanism is particularly shown in Figs. 10 and 11 and the folding mechanism is shown in Figs. 12 to 24 inclusive.

Fig. 1 is a sectional side elevation on line 3, 3 of Fig. 3 of the first grand division of my improved machine. Fig. 2 is a side elevation of a detail thereof. Fig. 3 is a plan view, with portions of the first cutter head casing removed, corresponding with Fig. 1. Fig. 4 is a detail sectional elevation on line 1, 1 of Fig. 1. Fig. 5 is a cross section on line 6, 6 of Fig. 6. Fig. 6 is an elevation of one of the cutter heads. Fig. 7 is a detail view in perspective of one member of the cutter head of Fig. 6. Fig. 8 is a detail sectional elevation on line 9, 9 of Fig. 9. Fig. 9 is a detail elevation, partly in section on line 1^a, 1^a of Fig. 1, of one of the cutter heads and coacting parts. Figs. 4 to 9 inclusive are shown on scales larger than that of, for instance, the constructional views of Figs. 1 and 2. Fig. 10 is a plan view of the angular transfer mechanism. Fig. 11 is a detail sectional elevation on an enlarged scale on line 10, 10 of Fig. 10. Fig. 11^a is a section on line 11, 11 of Fig. 11 and Fig. 11^b is an elevation of a detail of the blank locating means. Fig. 12 is a sectional elevation of the principal folding mechanism on line 13, 13 of Fig. 13 and Fig. 13 is a plan view corresponding therewith. Fig. 14 is a detail view looking downwardly and partly in section on line 12, 12 of Fig. 12. Fig. 15 is a detail view looking upwardly and partly in section on line 12^a, 12^a, Fig. 12. Fig. 16 is an end elevation, with parts broken away, of a detail of the principal folding mechanism. Fig. 17 is a sectional elevation on line 16, 16 of Fig. 16. Fig. 18 is a sectional elevation on line 16^a, 16^a of Fig. 16. Fig. 19 is a sectional elevation on line 16^b, 16^b of Fig. 16. Figs. 16 to 19 inclusive are on a scale larger than the scale of for instance the constructional view of Fig. 12. Fig. 20 is a plan view, with the upper portions removed, of a detail of the principal folding mechanism, on a much enlarged scale. Fig. 21 is a detail sectional elevation on line 22, 22 Fig. 22. Fig. 22 is a plan view of the seal flap folding mechanism. Figs. 23 and 24 are diagrammatic elevations illustrating steps in the seal flap folding operation. Figs. 21 to 24 inclusive are on the same scale as for instance Figs. 16 and 17. Fig. 25 is a diagrammatic view illustrating the several steps in the process of making an envelop in my improved machine.

General construction.—The first grand division of my improved machine comprises side frames 25, 26 in which are supported the various members and mechanisms for forming from a continuous web of paper, a succession of envelop blanks. The third grand division comprises side frames 29, 30 in which are supported the various members and mechanisms for creasing, gumming and folding the blanks made in the first grand division. Between the first and third grand divisions and overlapping each is the second grand division, the angular transfer mechanism. This is supported partly in bridge like frames 27, 28 reaching respectively from frames 25, 26 to frame 29, and partly in frames 29, 30. The envelop blank which I have chosen to illustrate the present machine as making is one whose sides form substantially a parallelogram having a pair of opposite sides parallel with the path of travel of the web. The particular form of

said blank may vary materially but is preferably substantially a parallelogram having four equal sides and forming a rhomb.

Blank making mechanism.—This first grand division comprises means for continuously advancing a web of paper and for performing a series of cutting operations on said web during its continued advancement. Said cutting operations comprise the making of cuts in each edge of the web, (I, II) cuts in the mid-portions thereof (III, IV) and finally in severing (V) the completed envelop blank from the leading end of said web, (see Fig. 25). Means are also provided for removing the small portions of waste paper cut from the edges and mid-portions of the web. Said web of paper may be supplied in the usual roll as 31 rotatably mounted on shaft 32 in brackets upstanding from the base of the machine. Guide arms as 33 reach rearwardly from pivots as 34 in frames 25, 26 for engagement with the roll to keep the web of paper in proper transverse alinement. The web of paper is then threaded between a plurality of rolls 35, 36, 37 pivotally mounted in side frames 25, 26, and thence to first cutter cylinder 40 mounted for rotation on shaft 39 supported in sleeve-like boxes 41, 42 inreaching from side frames 25, 26 respectively. The web of paper engages the periphery of said cylinder for about half its circumference and while in said engagement cuts I (Fig. 25) are made in opposite edges thereof. The web then passes to similar engagement with second cutter cylinder 50 similarly mounted for rotation on shaft 49 supported in sleeve-like boxes 47, 48 inreaching from side frames 25, 26 respectively. While the web is in engagement with second cutter cylinder 50 cuts II (Fig. 25) are made in opposite edges of said web. Cylinders 40 and 50 are relatively timed to make cuts I and II at the desired intervals on the edges of the web. As cutter cylinders 40 and 50 are in all respects similar in construction and operation a description of one will suffice for both. Referring therefore more particularly to cutter cylinder 50 which is illustrated more in detail than cylinder 40, it will be observed that the circumference of said cutter-cylinder is evenly divisible by the length of the blank measured on the edge of the web. In the present instance said circumference equals four times a blank length and said cutter cylinder is therefore provided at each end thereof with four sets of cutting means equally spaced circumferentially. The several cutting means at one end are arranged relatively opposite those at the other end of said cylinder so as to make cuts, as I, in predetermined relation to each other on opposite edges of the web. As the set of four cutting means at one end of cylinder 50 is in every respect like the set of four cutting means at the other end thereof (except in detail profile of cut) a description of one set will suffice for both. Also as each group of the set of four cutting means is in every respect like the other three a description of one will suffice for all. Referring therefore particularly to cutting means indicated in a general way at 45 (see Figs. 1, 3, 4) die 38 having in the present instance a cutting profile corresponding with lower cut II (Fig. 25) is formed in or set into the edge of the periphery of cylinder 50. On shaft 43 is rotatably mounted cutter 44 having a profile complementary to that of die 38. Said shaft 43 is approximately tangent to cylinder 50 and to the face of die 38, and is supported in bearings 46, 46 on the end of cylinder 50. On one end of cutter shaft 43 is bevel gear 51 driven from bevel gear 52 on the outer end of radial shaft 53 in bearing 54 on the end of cylinder 50. Bevel gear 55 on the inner end of said radial shaft 53 is driven by fixed gear 56 on the inner end of sleeve like bearing 47 of cylinder shaft 49. Thus when cylinder 50 is rotated, gear 55 has a planetary relation to fixed gear 56 and is rotated on its own axis during its revolution about said gear 56. Said rotation of gear 55 is transmitted as described to cutter shaft 43. The relative diameters of the several gears of the train are such that cutter 44 on shaft 43 is caused to make one complete rotation during one rotation of cylinder 50, and the timing is such that said cutter 44 is caused to coact with its die 38 to make its predetermined cut in the edge of the web while the web is wrapped about the periphery of the cylinder and to then rotate through said die to permit the free tangential departure of the cut portion of the web from said cylinder. An annular hood 57 is fixed to the end of cylinder 50 for rotation therewith, by any convenient means as screws 58 and is provided with apertures as 59 opposite the cutting means as 45 for the passage of waste as 60 cut from the edge of the web. Fixed hood 61 having a circular jointure 62 with rotatable hood 57 has pipe 63 leading therefrom. By suitable means not shown suction may be applied to said pipe 63 and chips or waste as 60 conducted away from the cutting mechanism.

Table 65, having apertures as 64 (Fig. 8) therein at suitable places for the operation upon the web of various instrumentalities, is provided to assist the progress of the web in its proper direction. Said table is supported on brackets 78, 79 on tie rods 82, 83 respectively, reaching from side frame 25 to side frame 26.

Indicated in a general way at 70 is illustrated the means for forming the first cut III (Fig. 25) in the mid-portion of the

web. Said means comprises cutter 66 adjustably mounted on shaft 67 for coaction with fixed cutter 68 therebelow. Said shaft 67 is rotatably mounted in boxes 71, 72 in side frames 25, 26 respectively. Fixed cutter 68 is adjustably mounted on cross frame 69 supported from side frames 25, 26.

Referring now more particularly to Figs. 5, 6 and 7 the peculiar construction of rotatable cutter 66 will be pointed out. Said cutter comprises a plurality of disk like heads as 73 in the edge of each of which is adjustably mounted one or more cutters as 74. In the present instance I have shown two diametrically opposite cutters in each head and the cutter head is rotated once for each two successive blank positions of the passing web so that any individual cutter operates upon alternate blank portions of said web. The cutting edges of cutters 74, 74^a, 74^b are arranged to present a continuous line of cut preferably helical whose profile corresponds with that of the cut to be made in the web. The dividing of cutter 66 into increments furnishes a mobility of adjustment, ease of removal for sharpening and of replacement that greatly facilitates continuity of operation. At each end of and closely adjacent to said cutter 66 are presser disks 75, 76 respectively. Disk 75 is provided with two diametrically opposite feet 75^a, 75^a extending circumferentially each way from the cutting edges of cutters 66 respectively. Said feet extend radially to a point just short of the cutter radius so that in rotating past fixed cutter 68 said feet will press the web against or up to said cutting edge close to the point of cutting, thus preventing any tendency of cutter 66 to tear the web at the ends of the cut. In the present instance the cutting edge of cutter 74 extends only a portion of the way across said cutter and foot 76^a of disk 76 therefore extends sidewise therefrom and overhangs the blank portion of cutter 71. For convenience of assembling, cutter disks 73, 73^a and 73^b and presser disks 75 and 76 are mounted between clamp nuts 606 and 660 on sleeve 670. Key 703 serves to locate the several disks relatively to each other on sleeve 670. Said sleeve may be split at its ends, as at 607 and by means of clamp collars, as 705, adjustably secured to shaft 67.

Cutting means 80 for forming the second cut IV (Fig. 25) in the mid portion of the web is substantially similar to means 70 just described for making cut III except that cut IV has a profile the reverse, relatively to the web, of cut III and except that provision is made for removing the waste formed by cutting means 80. The waste remover comprises tube or conduit 77 leading from directly in front of fixed cutter 81 to some suitable means, not shown, for exhausting the air from said tube and thereby conducting the chips or scrap away from the cutting point.

The principal feeding means for the web comprises a pair of feed rolls 84, 85 mounted on shafts 86, 87 respectively having bearings in side frames 25, 26. Upper shaft 86 is mounted in eccentric sleeves as 88 having arms 89, 90, the free ends of which are secured to rod 91, for lifting upper roll 84 from engagement with lower roll 85 to facilitate threading the web of paper therebetween.

The means for severing the blank from the leading end of the web, V (Fig. 25), comprises rotatable cutter 95 in coaction with fixed cutter 96 (Figs. 1, 3, 8, 9 and 10). Rotatable cutter 95 has right and left cutting portions 97, 98 each comprising a plurality of cutting members mounted on sleeve 905 all similar in construction to similar parts of cutter head 70 previously described in detail. But in the present instance presser disks, as 75, 76, are omitted as the severing cuts have their ends unconfined and are therefore not liable to tear as are the mid web cuts. The several members of cutter 95 are mounted on shaft 93 and are located circumferentially relatively to each other by key 930. Shaft 93 is mounted in bearings 99, 100 depending from bridge frames 27, 28 respectively. Fixed cutter 96 is adjustably mounted on bracket 92 fixed to frame 30.

For advancing the leading end of the web between rotatable cutter 95 and fixed cutter 96 I provide opposite pairs of small rolls 101, 103 and 102, 104 respectively for engagement with the edges of the web. Said rolls have their line of coaction just prior to the cutting line, are actuated at a surface speed slightly in excess of the speed of the web and the members of each pair of rolls are urged to coaction by spring pressure. Because of this increase in surface speed there is a very slight slipping of the rolls on the web and a slight tension applied thereto whereby any tendency to slackness is obviated. As said pairs of rolls are right and left duplicates a description of rolls 101, 103 and their mountings will suffice for both. Bearing 99 for cutter shaft 93 has ear 909 thereon in which is fixed stud 94. Said stud 94 has collar 105 thereon and between said collar and nut 106 is adjustably fixed arm 107 carrying at its outer end stud 108 on which roll 101 freely turns. Said roll 101 has gear 109 fixed thereto for engagement with gear 110 of roll 103. Lower roll 103 is fixed on the inner end of shaft 111 mounted for rotation in the lower end of yieldable arm 112. The outer end of said shaft 111 has gear 113 fixed thereon for engagement with gear 114 of shaft 93. The relative sizes of gears 113, 114 are such as to impart to roll 103 a surface speed slightly in excess of

that of the web, as already described. Yieldable arm 112 is pivoted about midway its length on stud 94 and its upper end engages spring 115 in socket 116 of bearing bracket 99, whereby its lower end is caused to urge roll 103 to coaction with roll 101.

For advancing the leading end of the web while it is being severed from the main portion of the web to form a blank, rolls 119, 120 are provided. Upper roll 119 is segmental and is fixed to the inner end of shaft 117 having a bearing in bracket 99. The outer end of said shaft 117 has gear 118 thereon driven from gear 114 on shaft 93 through intermediate gear 121. Lower roll 120 is fixed to shaft 127 revolubly mounted in the lower end of yieldable arm 122 pivoted at 123 in bracket 99. Said arm urges roll 120 to coaction with roll 119 by means of spring 124 in socket 125 in engagement with the upper end of said arm 122. Gear 126 is fixed to the outer end of shaft 127 for engagement with gear 118.

Angular transfer mechanism.—Segmental roll 119 and roll 120 are the last instrumentalities to operate upon the web and the first to operate upon the severed blank. They are the last instrumentalities whose axes are parallel to the axes of the blank forming means as for instance shaft 93. The functions of said rolls are first, to advance the leading end of the web, as already described, during the operation of the severing means and second, upon the completion of the severing and substantially coincident therewith to deliver the blank to the locating means and the gripping means of the transfer mechanism, thereby performing the first step in the operation of the angular transfer mechanism.

Receiving cylinder 130 is fixed to shaft 131 having one bearing in sleeve 132 of frame 29 and another bearing in frame 30. Above roll 130 in the free end of arm 133 on shaft 134 parallel with shaft 131 is shaft 135. Said shaft has fixed thereto for rotation therewith front stop 136 for locating the blank relatively to cylinder 130. Shaft 135 has gear 159 fixed to the outer end thereof and is driven from gear 140 on shaft 134 through intermediate gear 141 on stud 142 in arm 133. Arm 133 has ear 129 extending downwardly therefrom and sleeve 132 has arm 128 clamped thereto. Between ear 129 and arm 128 spring 143 is efficient to urge arm 133 to cause segmental rolls 137, 138 to coact with receiving cylinder 130. Nuts 144 on spring stud 145 are efficient to hold segmental rolls 137, 138 on arm 133 in proper positions relatively to cylinder 130 (Fig. 11). Said cylinder 130 has three receiving beds as 146 thereon and each is provided with clips as 147, 148 for gripping the blank to the receiving bed. Said cylinder is geared to make one third of a rotation for each blank delivered thereto. On shaft 135 and adjacent to the hub of front stop 136 is segmental roll 138 for coaction with cylinder 130 for assisting the delivery of the blank to said cylinder. On shaft 135 on each side of said segmental roll 138 are segments 137 and 139 respectively. Segment 137 is fixed to the hub of front stop 136 and segment 139 has a hub of its own. Segments 137 and 139 are shorter radially than segmental roll 138 and do not assist in feeding the blank but are efficient to prevent buckling and to smooth the blank out on cylinder 130. Each pair of clips as 147, 148 is mounted on one shaft as 149 in said cylinder 130 and said shaft has an arm as 150 having a roll as 151 for engagement with fixed cam 152. Said rolls, as 151, are spring urged to engagement with cam 152.

Folding mechanism.—The first step in the process of folding the blank is performed on receiving cylinder 130 and comprises the forming of the end creases VI (Fig. 25). Creasing rolls 161, 162, for coaction with grooves 153, 154 respectively in receiving cylinder 130 are provided to form said end creases. Creasing rolls 161, 162 are segmental (see Fig. 12) and each comprises two opposite members, as 161^a, 161^b of creaser 161. Said creases are fixed to shaft 134 having bearings in side frames 29, 30. Said shaft turns freely in arm 133 and is geared to make one half a revolution for each passing blank on cylinder 130. Directly below said receiving cylinder 130 is transfer cylinder 156 fixed to shaft 157 having bearings in side frames 29, 30. Said cylinder is provided with four blank receiving beds thereon and a pair of grippers for each bed. Each pair of grippers as 163, 164 is mounted upon one shaft as 158 having an arm as 165 carrying roll 166 for engagement with fixed cam 167 on sleeve 276. Said rolls as 166 are urged to engagement with said cam by spring actuated plungers as 168. Said transfer cylinder is efficient to receive the blank from receiving cylinder 130 and deliver it to folding cylinder 170 the same side up as on receiving cylinder 130.

Folding cylinder 170 is fixed to shaft 171 having bearings in flanged sleeves 173, 174 inreaching from side frames 29, 30 respectively. Said folding cylinder is provided with a plurality of folding-beds as 172 and said cylinder is timed so as to rotate in rolling coaction with transfer cylinder 156. Each folding-bed as 172 has a flat face and is provided with four end clips as 175, 176, 177, and 178, two end folders as 179, step VII, and two bottom flap folders as 181, step X. For laying the blank flat on the folding-bed after the leading pair of end clips, as 177, 178, has engaged the blank and before the other pair as 175, 176 has engaged the blank, ironing arm 190 is employed. Said arm is fixed to rock shaft 191

having bearings in side frames 29, 30. Fixed to that end of said shaft outboard side frame 29 is arm 192 having roll 193 thereon for engagement with cam 194 on creaser shaft 134 thereabove. As shaft 134 makes only one half a rotation for each passing blank, cam 194 is a two cycle cam. Arm 190 in its outward position lies within groove 160 in transfer cylinder 156 and swings therefrom to follow the contour of each flat passing folding-bed and to lay the blank closely thereon.

Referring now more particularly to Figs. 16 to 20 inclusive, end clips 175, 177 are axially mounted and turn freely on shaft 183 fixed in ears, as 184, under the folding-bed. Said end clips have arms as 185 to clip 175, having rolls as 186 for engagement with cam 195 fixed on the inner end of sleeve 173. End slips 175, 176 are urged to their work and rolls as 186, to engagement with their respective cams by spring actuated plunger 188 between arms 185, 187 of said clips respectively. The construction and mode of operation of the other end clips will be understood without further description. End folder 179 is pivoted freely on end clip shaft 183 and has gear 189 fixed thereto for engagement with rack 196 slidably mounted in ears 197, 198 under the folding-bed (Figs. 18 and 20). Rack 196 is of circular cross section and has arm 199 fixed to its outer end, carrying roll 200 for engagement with cam 201 fixed to sleeve 173. Rack 196 is held against rotation by pin 202 fixed in ear 197 and in slidable engagement with the upper portion of arm 199. End folder 180 is similarly mounted and similarly actuated from cam 210 fixed on sleeve 174. End folders 179, 180 are urged to their work and their cam rolls to engagement with their cams respectively by means of springs as 203 in rack 196 and push rod 204. Bottom flap folders 181, 182 are fixed to shaft 205 having bearings in ears 198, 208 under the folding-bed. Said shaft has bevel gear 206 fixed thereon for engagement with bevel gear 207 fixed on shaft 209. Said shaft 209 has bearings in ears 211, 212 under the folding-bed. Said shaft has gear 213 fixed thereon for engagement with rack 214 slidably mounted in ears 208, 218 under the folding-bed. Said rack has arm 215 on the outboard end thereof carrying roll 216 in engagement with cam 220 mounted on the rear of cam 210. Rack 214 is urged to its work by spring 217. In Fig. 19 bottom flap folders 181, 182 are shown open and in Fig. 20, they are shown closed.

The gumming mechanism, step VIII, Fig. 25, comprises gum dish 2200, roll 221, scraper 222 thereon, transfer roll 223 and gumming roll 224. Gum dish 2200 is illustrated as supported from tie rod 219 and transfer roll 223 is fixed to shaft 225 in sleeve bearing 226 inreaching from frame 30. Roll 221 is fixed to shaft 227 in the free end of bracket 228 adjustably mounted on sleeve 226. Scraper 222 is supported in arm 229 of bracket 228. Gumming roll 224 is fixed to shaft 230 having bearings in side frames 29, 30 and said shaft is timed to make one half a rotation for each passing folding-bed of cylinder 170. Said gumming roll therefore has two bottom flap gummers 231, 232 and two seal flap gummers 233, 234. The bottom and seal flaps of the blank lie upon the cylindrical surface of cylinder 170, forwardly and rearwardly of the flat folding-bed and the cylindrical faces of the gummers, as 231, therefore have a rolling contact with said blank.

Directly below gum dish 2200, top and bottom creasing roll 235, step IX, is fixed to shaft 236, having bearings in side frames 29, 30. Said creasing roll 235 is timed to make one half a rotation for coaction with each passing folding-bed and is therefore provided with two top creasing blades 237, 238 and two bottom creasing blades 239, 240, for coaction with creasing grooves as 261, 262 (Fig. 16) in the folding-bed. Second transfer cylinder 241 is located below creasing roll 235 for coaction with folding cylinder 170, and is fixed to shaft 242 having bearings in sleeves 246, 247 in side frames 29, 30 respectively. Said second transfer cylinder 241 is of the same diameter and in other respects closely similar to first transfer cylinder 156. Cylinder 241 has four receiving beds as 250 and a pair of clips as 243, 244 to each bed. Said clips are spring closed and are opened by cam 245 fixed to sleeve 246, in engagement with rolls, as 248, on arms, as 249, of said side clips. Cylinder 241 has its face cut back axially rearwardly of each receiving bed, as at 251, to provide room for the gummed face of the seal flap.

For coaction with second transfer cylinder 241 to iron the envelop to set the gummed and folded bottom flap securely against the folded end flaps roll 252 on shaft 253 is provided. Said shaft is mounted in spring supported boxes in side frames 29, 30. As the face of transfer roll 241 is narrower than the envelop length, supplemental ironing rolls 254, 255 are provided at opposite sides adjacent thereto for coaction with roll 252. As said rolls 254, 255 are right and left duplicates, a description of one will suffice for both (see Fig. 14). Roll 255 is fixed to the inboard end of shaft 256 in the outer end of bracket 257 clamped to sleeve 247. The outboard end of shaft 256 has gear 258 fixed thereon, for engagement with gear 259 fixed to shaft 253 of roll 252. The relative sizes of gears 258, 259 are such as to cause roll 255 to rotate at the same surface speed as cylinder 241 and roll 252.

Delivery cylinder 260 on shaft 263 is of the same diameter and generally similar to second transfer cylinder 241 and is provided for coaction therewith to take the envelops therefrom and deliver them to drying belts 264, 265. Shaft 263 has one bearing in sleeve 268 in side frame 29 and another bearing in side frame 30. Said delivery cylinder 260 has a wider face than that of transfer cylinder 241 and the clips of cylinder 260, as 266, 267 are set farther apart than those of cylinder 241 so as to avoid interference therewith. Said clips as 267 are spring closed and are opened by cam 270 fixed to sleeve 268, in engagement with rolls, as 271, on arms, as 272, of said clips.

Upper drying belts 264, 264 are supported at their lower ends on suitable pulleys, as 273, fixed to shaft 277 in sleeves, as 274, inreaching from side frames 29, 30. Said shaft 277 has gear 278 fixed to one end thereof and is driven from gear 279 on shaft 263 of delivery cylinder 260. The relative diameters of gears 278, 279 are such as to cause the drying belts to move at a speed slower than the surface speed of delivery cylinder 260. Lower drying belts 265, 265 are rotatably supported at their lower ends in brackets as 275 fixed to sleeves, as 274. Drying belts 264, 265 may be of suitable length to afford sufficient time for drying the gummed envelops.

The seal flap folding mechanism (Figs. 21 to 24 inclusive) step XI (Fig. 25) is supported in side frames 29^a, 30^a which may be extensions of side frames 29 30 respectively. The upper ends of the drying belts are supported on pulleys as 282, 283 respectively, mounted for free rotation on studs, as 281, inreaching from said side frames 29^a, 30^a. Seal flap folding rolls 284, 285, 286 and 287 are preferably of equal diameter and lower rolls 284, 285 are positioned for rolling coaction with each other, shaft 288 of roll 285 thereof being adjustably mounted relatively to roll 284 in horizontally slidable boxes in side frames 29^a, 30^a respectively. Shaft 289 of roll 284 has fixed bearings in said side frames. Roll 286 is segmental and is mounted, for rolling coaction with roll 284, on shaft 290 having bearings in vertically adjustable boxes 291, 292 in said side frames respectively. Roll 287 is also segmental and is mounted, for rolling coaction with roll 285, on shaft 293 having bearings in vertically adjustable boxes 295, 296 in said side frames respectively. Rolls 284, 285, 286 and 287 are caused to rotate in the direction of their arrows at the same peripheral speed by gears 297, 298, 299, 300 on the respective roll shafts. Table 294 is provided to direct the envelops from the drying belts 264, 265 to engagement with rolls 284, 286. Lower roll 285 preferably has a width of face about equal to the length of the envelop and roll 287 thereabove is relieved at its mid portion lengthwise so as to engage the envelop only near its ends. Rolls 284, 286 are preferably relatively short and engage the envelop at the mid portion of its length. Rod 351 is provided to deflect the envelop downwardly toward the bite of rolls 284, 285. Table 352 on bracket 354 clamped to tie rod 355 is provided to receive the leading edge of the envelop as it is advanced by rolls 284, 286 and stop 353 limits the travel of said leading edge in its first direction of travel in said seal flap folding mechanism.

The driving mechanism for my improved machine is as follows: Main pulley 301 having gear 302 fixed to the hub thereof is mounted for free rotation on stud 303 outstanding from frame 26. Power may be applied to said pulley 301 from some suitable source not shown. Said gear 302 drives gear 304 on shaft 49 of second cutter cylinder 50, on the one side and through intermediate gear 305, gear 306 on shaft 39 of first cutter cylinder 40. Gear 307 on shaft 67 of cutter 66 is driven from main gear 302 through intermediate gear 308 on stud 309. Shaft 801 of cutting mechanism 80 has gear 310 thereon driven from gear 307 through intermediate gear 311 on stud 312. Shaft 87 of lower feed roll 85 has gear 313 thereon driven from gear 306 through intermediate gears 314, 316 on studs 315, 317 respectively. Upper feed roll shaft 86 has gear 318 thereon driven from gear 313 therebelow. Power is conveyed to gear 319 on transfer shaft 20 from second gear 325 on lower feed roll shaft 87 through intermediate gears 320, 322, on studs 321, 323 respectively. Bevel gear 324 on the near end of shaft 20 (Fig. 3) drives bevel gear 326 on shaft 17 lying lengthwise of the machine in bearings 18, 19 depending from bridge frame 27. Bevel gear 327 on shaft 17 drives bevel gear 328 on cutter shaft 93. On the other end of said shaft 93 gear 329 drives gear 330 on shaft 15 of roll 104. Bevel gear 331 on the rear end of transfer shaft 20 (Fig. 10) drives bevel gear 332 on the rear end of second transfer shaft 280. Gear 333 on said shaft 280 drives gear 334 on creaser shaft 134 and said gear 334 drives gear 335 on shaft 131 of receiving cylinder 130. Said gear 335 drives gear 336 on shaft 157 of transfer cylinder 156, and said gear 336 drives, in turn, folding cylinder gear 337 on shaft 171. Gear 338 on gumming roll shaft 230 is driven from folding cylinder gear 337. Gear 339 on shaft 225 of gumming transfer roll 223 is driven from gear 338, and gear 340 on shaft 227 of gum roll 221 is driven from gear 339. Creaser roll gear 341 on shaft 236 is driven from folding cylinder gear 337, as is also gear 342 on shaft 242

of second transfer cylinder 241. Gear 343 on shaft 263 of delivery cylinder 260 is driven from gear 342 as is also gear 344 on shaft 253 of roll 252. Power is conveyed to the seal flap folding mechanism from pulley 345 on shaft 263 to pulley 346 on shaft 289 by belt or chain 347.

The operation of my improved envelop machine is as follows: A roll of paper 31 being supplied on shaft 32 the leading end of the web therefrom is led forwardly about rolls 35, 36, 37 (Fig. 1) and guide arms, as 33, are adjusted in position on said roll. The web of paper is then led upwardly around and in contact with the periphery of first cutting cylinder 40, then backwardly and upwardly around and in contact with the periphery of second cutting cylinder 50, then forwardly over table 65, through cutting means 70 and cutting means 80 and between main feed rolls 84, 85 (roll 84 being temporarily lifted by means of rod 91 to afford room for passing the web between said rolls). The web is then advanced under cutter 95 and between adjacent feed rolls, as 102, 104 and 119, 120, all respectively.

Power now being applied to main pulley 301 the machine is started. Referring now to the several step views of Fig. 25 the operations of the machine will be described relatively thereto. Opposite cutters of first cutting cylinder 40, as, for instance the lower right hand pair, one of which appears in Fig. 1, rotate over and inwardly and coact with their respective dies in the periphery of said cylinder, thereby cutting opposite notches in the edges of the web, I. Said cutters then pass downwardly through their dies respectively, thus leaving the web free to pass off from said cylinder and onto second cutting cylinder 50. Thereupon opposite cutters of said second cylinder, as for instance the lower left hand pair, one of which appears in Fig. 1, rotate in coaction with their respective dies in the periphery of said cylinder, and cut a second pair of notches in the edges of the web, II. The relative timing of cylinders 40 and 50 is such as to space cuts I and II the predetermined distance apart. The scrap cut from said web edges falls into hoods, as 57, and is conveyed away through pipes as 63, all respectively, by suitable suction means not shown.

The web now progresses through cutting mechanism 70, over fixed cutter 68 and under rotary cutter 66 where mid cut III is made, presser feet 75ª and 76ª pressing the web down against the fixed cutter close to the ends of cutter 66, whereby tearing of the ends of the cut is prevented. Said web is now advanced through cutting mechanism 80 where cut IV is formed. Cutting mechanisms 70 and 80 are timed relatively to each other and to cylinder 50 to form cuts III and IV in their proper relations to the edge cuts of the web. The scrap liberated by cut IV is conducted away through tube 77 by suitable suction means not shown. Up to this point the web has been advanced by means of main feed rolls 84, 85 between which the cut portions are now advanced and pass under rotary cutter 95 and over fixed cutter 96 where they are fed forwardly by edge rolls, as 102, 104, and the leading end of the web passes into the grip of rolls 119, 120. Edge rolls as 102, 104 being actuated at a speed slightly in excess of the speed of the web, keep said web taut between their point of action and main feed rolls 84, 85. After the leading end of the web is in the grip of rolls 119, 120, cutter 95 rotates into coaction with fixed cutter 96 and severs the web between the larger edge cuts and the mid cuts, V. At the instant of the completion of the severing of the blank from the web, rolls 119, 120 deliver the blank against front stop 136 which rotates in time therewith. The cut away portion of roll 119 at the same instant has rotated into position over roll 120 thereby liberating the blank. Directly succeeding said delivery of the blank against stop 136 the leading edge of segmental roll 138 coacts with receiving cylinder 130 to grip the blank and start it in its new direction of travel at such an angle to the path of the web and without changing the angular relation of the blank to the web path as will cause said blank to travel through the folding mechanism in a path parallel to a side of the folded envelop. Immediately following the engagement of the blank by segmental roll 138, segments 137, 139 on each side of segmental roll 138 hold the blank down and guide it to proper engagement with receiving cylinder 130. Directly following the engagement of segmental roll 138, clips as 147, 148 grip the leading edge of the blank to the face of cylinder 130 and said blank is conducted along a path which deviates from the web path widthwise of the web and under creasers as 161ª which in coaction with grooves 153, 154 in cylinder 130 form the end creases in the blank, VI.

The creased blank is then delivered to one of the beds of transfer cylinder 156, where its leading edge is clamped to the bed by grippers as 163, 164. At the same instant the grippers of cylinder 130 release their hold. The blank then passes downwardly and around on transfer cylinder 156 and is delivered to one of the folding-beds of folding cylinder 170. End grippers as 177, 178 of said folding-bed thereupon grip the blank to said folding-bed. At the same time the grippers of transfer cylinder 156 release their hold. Ironing arm 190 thereupon swings outwardly in coaction with cylinder 170 and lays the blank flat upon the folding-bed; whereupon end grippers as 175, 176

grip the blank to the folding-bed. Said blank now passes upwardly on folding cylinder 170 and end flap folders 179, 180 turn the end flaps successively over and down onto the body of the blank, step VII. The partially folded blank then passes onwardly on its folding-bed under bottom flap gummer as 231 and then under seal flap gummer as 233, step VIII; said gummers having previously received a suitable supply of gum from gum dish 2200 by means of rolls 221 and 223. The blank on its folding-bed now passes over and downwardly and is operated upon by creasing blade as 239, which forms the lower crease therein, and then by creasing blade as 238, which forms the upper crease therein, step IX. Bottom flap folders as 181, 182 then swing up from below the surface of the cylinder, lift the bottom flap and fold it over onto the body of the envelop, step X. Directly thereafter this bottom folded edge is delivered onto one of the beds as 250 of second transfer cylinder 241 and grippers as 243, 244 grip said edge to said bed. The end grippers of the folding-bed thereupon release their hold and the now substantially folded envelop, with its unfolded seal flap, gummed side down, in depression as 251 of said transfer cylinder, is carried downwardly around on said cylinder and between ironing rolls, as 252, 254, and thence upwardly to one of the beds of delivery cylinder 260 on which it is gripped by grippers, as 266, 267, the grippers of the transfer cylinder thereupon releasing their hold. The envelop is then delivered into the bite of drying belts 264, 265 which engage the envelops near their ends beyond the exposed gummed portions of the seal flap. The speed of said drying belts is such as to cause the envelops to overlap (Fig. 22) and said belts are of sufficient length to provide time during the retention of the envelops thereby for the drying of the gum thereon. The envelop then passes out of the grip of said belts, over table 294 (Fig. 21) and into the bite of rolls 284, 286 which run at a speed materially faster than that of the drying belts. The cut away portion of roll 286 causes the successive envelops to be taken intermittently from the drying belts. Said rolls 284, 286 advance the envelop over roll 285 and over table 352 against stop 353. Thereupon segmental roll 287 rotates in coaction with lower roll 285 and reverses the direction of travel of the leading end of the envelop, thereby causing the envelop to buckle downwardly along its seal flap crease, assisted when necessary by rod 351, and the fold thus formed is delivered to the bite of rolls 284, 285 (Fig. 24) and the seal flap fold completed thereby, step XI. From said rolls 284, 285 the completed envelop is delivered to some suitable gathering means as 360.

I claim:

1. An envelop machine, including in combination, means for continuously advancing a web of paper, means for forming from said web a blank whose sides form substantially a rhomb having sides parallel with the path of the web, means for advancing the blank in a path which diverges from the web path at an acute angle and means for folding the blank.

2. An envelop machine, including in combination, means for continuously advancing a web of paper, means for forming from said web a blank whose sides form substantially a rhomb having sides parallel with the path of the web, means for advancing the blank in a path which diverges from the web path at an acute angle and means for folding the blank, the angle of divergence being the angle which one of the sides of the envelop bears to one of the sides of the blank.

3. An envelop machine, including in combination, means for continuously advancing a web of paper, means for forming from said web a blank whose sides form substantially a rhomb having sides parallel with the path of the web, means for advancing the blank in a path which diverges from the web path at an acute angle without changing the angular relation of the blank to the web path and means for folding the blank, said several means being operable in the sequence recited.

4. An envelop machine, including in combination, means for continuously advancing a web of paper, means for forming from said web a blank whose sides form substantially a rhomb having sides parallel with the path of the web, means for advancing the blank in a path which diverges from the web path at an acute angle without changing the angular relation of the blank to the web path and means for folding the blank, the angle of divergence being the angle which one of the sides of the envelop bears to one of the sides of the blank, said several means being operable in the sequence recited.

5. An envelop machine, including in combination, means for continuously advancing a web of paper, means for forming said web into blanks during the continuous advancement of said web, comprising means for cutting portions from the edges of the web, means for cutting the mid-portion of the web and means for severing the web between the edge cuts and the mid-cuts and means for advancing the blank in a path which deviates from the web path widthwise of the web and revoluble means for simultaneously advancing and folding the blank.

6. An envelop machine, including in combination, means for continuously advancing a web of paper, means for forming said web into blanks during the continuous advancement of said web, comprising rotary means for cutting portions from the edges of the web, coacting rotary means and fixed means for cutting the mid-portion of the web and coacting rotary means and fixed means for severing the web between the edge cuts and the mid cuts and means for advancing the blank in a path which deviates from the web path widthwise of the web and revoluble means for simultaneously advancing and folding the blank.

7. An envelop machine, including in combination, means for forming from a web of paper a blank whose sides form substantially a parallelogram having sides parallel with the path of the web, comprising a rotatable cylinder having a die therein whose cutting edges are coincident with the periphery of the cylinder, means for feeding the web onto the cylinder and over the die at the peripheral speed of the cylinder, a cutter rotatably mounted on the cylinder for coaction with the die, means for rotating the cutter continuously in one direction, means for rotating the cylinder, means for timing the cylinder and the cutter, means for severing the blank from the leading end of the web and means for advancing the blank in a path which deviates from the web path widthwise of the web and means for successively performing a series of folding operations on said blank.

8. An envelop machine including in combination, means for forming from a web of paper a blank whose sides form substantially a parallelogram having sides parallel with the path of the web, comprising a plurality of cylinders each having a die in the periphery thereof, a cutter for coaction with each die, means for rotating the cylinders at the same surface speed, means controlled by the rotation of the cylinders for actuating the cutters respectively, means for feeding a web of paper successively onto the cylinders and over the dies at the peripheral speed of the cylinders, means for severing the blank from the leading end of the web, means for advancing the blank in a path which deviates from the web path widthwise of the web and means for successively performing a series of folding operations on said blank.

9. An envelop machine, including in combination, means for forming from a web of paper a blank whose sides form substantially a parallelogram having sides parallel with the sides of the web, comprising a rotatable cylinder having a die therein whose cutting edges are coincident with the periphery of the cylinder, means for feeding the web onto the cylinder and over the die at the peripheral speed of the cylinder, a cutter rotatably mounted on the cylinder for coaction with the die, means for rotating the cutter continuously in one direction, means for rotating the cylinder, means for timing the cylinder and the cutter and means for severing the blank from the leading end of the web; means for advancing the blank in a path which diverges from the web path widthwise of the web without changing the angular relation of the blank to the web path and means for successively performing a series of folding operations on said blank; the angle of divergence being the angle which one of the sides of the envelop bears to one of the sides of the blank.

10. An envelop machine, including in combination, means for forming from a web of paper a blank whose sides form substantially a parallelogram having sides parallel with the path of the web, comprising a plurality of cylinders, each having a die in the periphery thereof, a cutter for coaction with the die, means controlled by the rotation of the cylinder for actuating the cutter, means for rotating the cylinders at the same surface speed and means for feeding the web successively onto the cylinders and over the dies at the peripheral speed of the cylinders; means for advancing the blank in a path which diverges from the web path widthwise of the web without changing the angular relation of the blank to the web and means for successively performing a series of folding operations on said blank, the angle of divergence being the angle which one of the sides of the envelop bears to one of the sides of the web.

11. An envelop machine, including in combination, means for advancing a web of paper, means for forming from said web a blank whose sides form substantially a parallelogram having sides parallel with the path of the web, comprising a rotatable cutter having a cutting edge comprising a plurality of independently mounted and independently adjustable cutting members and a fixed cutter for coaction with the rotatable cutter; means for advancing the blank in a path which diverges from the web path widthwise of the web and means for successively performing a series of folding operations on said blank.

12. An envelop machine, including in combination, means for advancing a web of paper, means for forming from said web a blank whose sides form substantially a parallelogram having sides parallel with the path of the web, comprising a rotatable cutter having a presser foot adjacent to each end of its cutting edge for rotation therewith and a fixed cutter for coaction with the rotatable cutter; means for advancing the blank in a path which diverges from the web path widthwise of the web without

changing the angular relation of the blank to the web path and means for successively performing a series of folding operations on said blank.

13. An envelop machine, including in combination, means for advancing a web of paper, means for forming from said web a blank whose sides form substantially a parallelogram having sides parallel with the path of the web, comprising a rotatable cutter having a cutting edge comprising a plurality of independently mounted and independently adjustable cutting members, a presser foot adjacent to each end of its cutting edge for rotation with the cutter and a fixed cutter for coaction with the rotatable cutter; means for advancing the blank in a path which diverges from the web path widthwise of the web without changing the angular relation of the blank to the web path and traveling means for folding the blank moving in said path, the angle of divergence being the angle which one of the sides of the envelop bears to one of the sides of the blank.

14. An envelop machine, including in combination, means for forming from a web of paper, a blank whose sides form substantially a parallelogram having sides parallel with the path of the web, comprising a rotatable cylinder having a die therein whose cutting edges are coincident with the periphery of the cylinder, means for feeding the web onto the cylinder and over the die at the peripheral speed of the cylinder, a rotatable cutter mounted on the cylinder for coaction with the die, means for rotating the cutter continuously in one direction, means for rotating the cylinder, means for timing the cylinder and the cutter; coacting rotary means and fixed means for cutting the mid-portion of the web, means for severing the blank from the leading end of the web; means for advancing the blank in a path which deviates from the web path widthwise of the web and traveling means for folding the blank moving in said path.

15. An envelop machine, including in combination, means for forming from a web of paper a blank whose sides form substantially a parallelogram having sides parallel with the path of the web, comprising a plurality of cylinders each having a die in the periphery thereof, a cutter for coaction with the die, means controlled by the rotation of the cylinders for actuating the cutters respectively, means for rotating the cylinders at the same surface speed and means for feeding the web successively onto the cylinders and over the dies at the peripheral speed of the cylinders; a rotatable cutter and a fixed cutter each having its cutting edge at all points substantially equi-distant from the axis of the rotatable cutter, said axis being in a plane normal to the path of the web, means for rotating the rotatable cutter at a peripheral speed equal to the speed of the web, means for severing the blank from the leading end of the web, means for advancing the blank in a path which deviates from the web path widthwise of the web and traveling means for folding the blank moving in said path.

16. An envelop machine, including in combination, means for forming from a web of paper a blank whose sides form substantially a parallelogram having sides parallel with the path of the web, comprising a rotatable cylinder having a die therein whose cutting edges are coincident with the periphery of the cylinder, means for feeding the web onto the cylinder and over the die at the peripheral speed of the cylinder, a cutter rotatably mounted on the cylinder for coaction with the die, means for rotating the cutter continuously in one direction, means for rotating the cylinder, means for timing the cylinder and the cutter; coacting rotary means and fixed means for cutting the mid-portion of the web, means for severing the blank from the leading end of the web, means for advancing the blank in a path which diverges from the web path widthwise of the web without changing the angular relation of the blank to the web path and traveling means for folding the blank moving in said path, the angle of divergence being the angle which one of the sides of the envelop bears to one of the sides of the blank.

17. An envelop machine, including in combination, means for forming from a web of paper a blank whose sides form substantially a parallelogram having sides parallel with the sides of the web, comprising a plurality of cylinders each having a die in the periphery thereof, a cutter for coaction with the die, means controlled by the rotation of the cylinders for actuating the cutters respectively, means for rotating the cylinders at the same surface speed and means for feeding the web successively onto the cylinders and over the dies at the peripheral speed of the cylinders; a rotatable cutter and a fixed cutter each having its cutting edge at all points substantially equidistant from the axis of the rotatable cutter, said axis being in a plane normal to the path of the web, means for rotating the rotatable cutter at a peripheral speed equal to the speed of the web, means for severing the blank from the leading end of the web, means for advancing the blank in a path which deviates from the web path widthwise of the web and traveling means for folding the blank moving in said path, the angle of divergence being the angle which one of the sides of the envelop bears to one of the sides of the blank.

18. An envelop machine, including in combination, means for continuously advancing a web of paper, means for forming from

said web a blank whose sides form substantially a parallelogram having sides parallel with the path of the web, comprising means for cutting portions from the edges of the web, means for cutting the mid portion of the web and means for severing the web between the edge cuts and the mid cuts; means for advancing the blank in a path which deviates from the web path widthwise of the web and traveling means for successively performing a series of folding operations on said blank.

19. An envelop machine, including in combination, means for continuously advancing a web of paper, means for forming from said web during its continuous advancement a blank whose sides form substantially a parallelogram having sides parallel with the path of the web, comprising rotary means for cutting portions from the edges of the web, coacting rotary means and fixed means for cutting the mid portion of the web and coacting rotary means and fixed means for severing the web between the edge cuts and the mid cuts; means for advancing the blank in a path which deviates from the web path widthwise of the web and traveling means for successively performing a series of folding operations on said blank.

20. An envelop machine, including in combination, means for continuously advancing a web of paper, means for forming from said web during its continuous advancement a blank whose sides form substantially a parallelogram having sides parallel with the sides of the web, comprising means for cutting portions from the edges of the web, means for cutting the mid portion of the web and means for severing the web between the edge cuts and the mid cuts; means for advancing the blank in a path which diverges from the web path widthwise of the web without changing the angular relation of the blank to the web path and traveling means for successively performing a series of folding operations on said blank, the angle of divergence being the angle which one of the sides of the envelop bears to one of the sides of the blank.

21. An envelop machine, including in combination, means for continuously advancing a web of paper, means for forming from said web during its continuous advancement a blank whose sides form substantially a parallelogram having sides parallel with the path of the web, comprising rotary means for cutting portions from the edges of the web, coacting rotary means and fixed means for cutting the mid portion of the web and coacting rotary means and fixed means for severing the web between the edge cuts and the mid cuts; means for advancing the blank in a path which diverges from the web path widthwise of the web without changing the angular relation of the blank to the web path and traveling means for successively performing a series of folding operations on said blank, the angle of divergence being the angle which one of the sides of the envelop bears to one of the sides of the blank.

22. An envelop machine, including in combination, means for advancing a web of paper, means for forming said web into blanks, a rotatable folding-bed, means for delivering the blank to the folding-bed, end-clips pivotally mounted on the folding-bed for holding the blanks on the folding-bed, means pivoted coaxially with the end-clips for folding the end flaps, means for folding the bottom and seal flaps and means for timing the several instrumentalities with each other.

23. An envelop machine, including in combination, means for advancing a web of paper, means for forming said web into blanks, a rotatable folding-bed having a flat working face, means for delivering the blank to the folding-bed, means for laying the blank flat on the folding-bed, end-clips pivotally mounted on the folding-bed for holding the blanks on the folding-bed, means pivoted coaxially with the end-clips for folding the end flaps, means for folding the bottom and seal flaps and means for timing the several instrumentalities with each other.

24. An envelop machine, including in combination, means for forming from a web of paper a blank whose sides form substantially a parallelogram having sides parallel with the path of the web, comprising a rotatable cylinder having a die therein whose cutting edges are coincident with the periphery of the cylinder, means for feeding a web of paper onto the cylinder and over the die at the peripheral speed of the cylinder, a cutter rotatably mounted on the cylinder for coaction with the die, means for rotating the cutter continuously in one direction, means for rotating the cylinder and means for timing the cylinder and the cutter; means for severing the blank from the leading end of the web, means for advancing the blank in a path which diverges from the web path widthwise of the web, means for folding the blank and means for timing the several instrumentalities with each other.

25. An envelop machine, including in combination, means for forming from a web of paper a blank whose sides form substantially a parallelogram having sides parallel with the path of the web comprising a rotatable cylinder having a die therein whose cutting edges are coincident with the periphery of the cylinder, means for feeding a web of paper onto the cylinder and over the die at the peripheral speed of the cylinder, a cutter rotatably mounted on the cyl-

inder for coaction with the die, means for rotating the cutter continuously in one direction, means for rotating the cylinder and means for timing the cylinder and the cutter; means for severing the blank from the leading end of the web, means for advancing the blank in a path which diverges from the web path widthwise of the web, means for folding the blank and means for timing the several instrumentalities with each other.

26. An envelop machine, including in combination, means for forming from a web of paper a blank whose sides form substantially a parallelogram having sides parallel with the path of the web, comprising a rotatable cylinder having a die therein whose cutting edges are coincident with the periphery of the cylinder, means for feeding a web of paper onto the cylinder and over the die at the peripheral speed of the cylinder, a cutter rotatably mounted on the cylinder for coaction with the die, means for rotating the cutter continuously in one direction, means for rotating the cylinder, means for timing the cylinder and the cutter and means for severing the blank from the leading end of the web; means for advancing the blank in a path which diverges from the web path widthwise of the web without changing the angular relation of the blank to the web path, means for folding the blank and means for timing the several instrumentalities with each other.

27. An envelop machine, including in combination, means for forming from a web of paper a blank whose sides form substantially a parallelogram having sides parallel with the path of the web, comprising a plurality of cylinders each having a die in the periphery thereof, a cutter for coaction with the die, means controlled by the rotation of the cylinder for actuating the cutter, means for rotating the cylinders at the same surface speed, means for feeding a web of paper successively onto the cylinders and over the dies at the peripheral speed of the cylinders, means for severing the blank from the leading end of the web and means for advancing the blank in a path which diverges from the web path widthwise of the web without changing the angular relation of the blank to the web path; means for folding the blank and means for timing the several instrumentalities with each other.

28. An envelop machine including in combination, means for folding the seal flap comprising two opposite pairs of continuously rotating members, one pair of which is intermittently operable for advancing the envelop between them in one direction, the other pair of which is intermittently operable for reversing the direction of travel of the leading end of the envelop therebetween, and one member of each of the two pairs of rotating members coacting for advancing the folded envelop in a direction transverse its first direction of travel.

29. An envelop machine, including in combination, means for forming from a web of paper a blank whose sides form substantially a parallelogram having sides parallel with the path of the web, comprising a rotatable cutter and a fixed cutter each having its cutting edge at all points substantially equidistant from the axis of the rotatable cutter, means for rotating the rotatable cutter, means for feeding the web at a speed equal to the peripheral speed of the rotatable cutter and normal to the plane of the axis thereof and means for severing the blank from the leading end of the web; means for advancing the blank in a path which diverges from the path of the web without changing the angular relation of the blank to the web path, means for folding the end flaps and the bottom flap, the angle of divergence being the angle which one of the sides of the envelop bears to one of the sides of the blank; and means for folding the blank.

30. An envelop machine, including in combination, means for forming from a web of paper a blank whose sides form substantially a parallelogram having sides parallel with the path of the web, during the continuous advancement of said web, comprising means for cutting portions from the edges of the web, means for cutting the mid portion of the web and means for severing the web between the edge cuts and the mid cuts; means for advancing the blank in a path which diverges from the web path widthwise of the web without changing the angular relation of the blank to the web path, means for folding the blank, and means for timing the several instrumentalities with each other.

31. An envelop machine, including in combination, means for continuously advancing a web of paper, means for forming from said web during its continuous advancement a blank whose sides form substantially a parallelogram having sides parallel with the path of the web, comprising rotary means for cutting portions from the edges of the web, coacting rotary means and fixed means for cutting the mid portion of the web and coacting rotary means and fixed means for severing the web between the edge cuts and the mid cuts; means for advancing the blank in a path which deviates from the web path widthwise of the web, means for folding the blank, and means for timing the several instrumentalities with each other.

32. An envelop machine, including in combination, means for continuously advancing a web of paper, means for forming from said web during its continuous advancement a blank whose sides form substantially a parallelogram having sides parallel with

the path of the web, comprising rotary means for cutting portions from the edges of the web, coacting rotary means and fixed means for cutting the mid portion of the web and coacting rotary means and fixed means for severing the web between the edge cuts and the mid cuts; means for advancing the blank in a path which deviates from the web path widthwise of the web, means for folding the blank, and means for timing the several instrumentalities with each other.

33. An envelop machine, including in combination, means for continuously advancing a web of paper, means for forming from said web during its continuous advancement a blank whose sides form substantially a parallelogram having sides parallel with the path of the web, comprising rotary means for cutting portions from the edges of the web, coacting rotary means and fixed means for cutting the mid portion of the web and coacting rotary means and fixed means for severing the web between the edge cuts and the mid cuts; means for advancing the blank in a path which deviates from the web path widthwise of the web, means for folding the blank and means for timing the several instrumentalities with each other.

34. An envelop machine, including in combination, a plurality of rotatable coacting dies and cutters for forming from a web of paper a blank whose sides form substantially a parallelogram having sides parallel with the path of the web, means for advancing the blank in a path which diverges from the web path widthwise of the web, a rotatable folding-bed, means for delivering the blank to the folding-bed, end-clips pivotally mounted on the folding-bed for holding the blank on the folding-bed, means pivoted coaxially with the end-clips for folding the end-flaps, means for folding the bottom and seal flaps and means for timing the several instrumentalities with each other.

35. An envelop machine, including in combination, a plurality of rotatable coacting dies and cutters for forming from a web of paper a blank whose sides form substantially a parallelogram having sides parallel with the path of the web, means for advancing the blank in a path which diverges from the web path widthwise of the web, a rotatable folding-bed having a flat working face, means for delivering the blank to the folding-bed, means for laying the blank flat on the folding-bed, end-clips pivotally mounted on the folding-bed for holding the blank on the folding-bed, means pivoted coaxially with the end-clips for folding the end flaps, means for folding the bottom and seal flaps and means for timing the several instrumentalities with each other.

36. An envelop machine, including in combination, a plurality of rotatable coacting dies and cutters for forming from a web of paper a blank whose sides form substantially a parallelogram having sides parallel with the path of the web, means for advancing the blank in a path which diverges from the web path widthwise of the web without changing the angular relation of the blank to the web path, a rotatable folding-bed, means for delivering the blank to the folding-bed, end-clips pivotally mounted on the folding-bed for holding the blank on the folding-bed, means pivoted coaxially with the end-clips for folding the end flaps, means for folding the bottom and seal flaps and means for timing the several instrumentalities with each other.

37. An envelop machine, including in combination, a plurality of rotatable coacting dies and cutters for forming from a web of paper a blank whose sides form substantially a parallelogram having sides parallel with the path of the web, and means for advancing the blank in a path which diverges from the web path widthwise of the web without changing the angular relation of the blank to the web path; a rotatable folding-bed having a flat working face, means for delivering the blank to the folding-bed, means for laying the blank flat on the folding-bed, end-clips pivotally mounted on the folding-bed for holding the blank on the folding-bed, means pivoted coaxially with the end-clips for folding the end flaps, means for folding the bottom and seal flaps and means for timing the several instrumentalities with each other.

Signed this thirtieth day of December nineteen hundred and nine (1909) before two subscribing witnesses.

CHARLES F. SMITH.

Witnesses:
ARTHUR MEDER,
NIXON LEE.