(No Model.) 2 Sheets—Sheet 1.

C. W. ALDRICH.

HEATER.

No. 590,447. Patented Sept. 21, 1897.

Fig. 1.

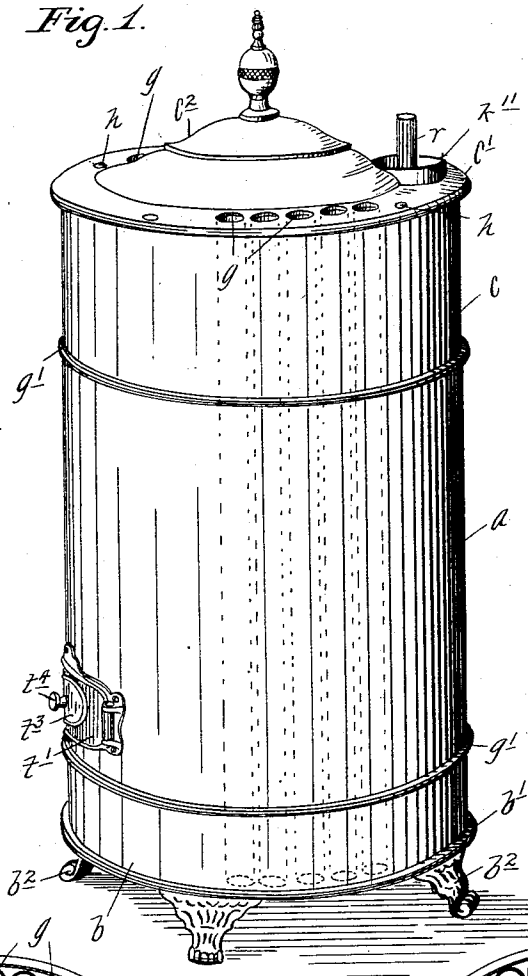

Fig. 2.

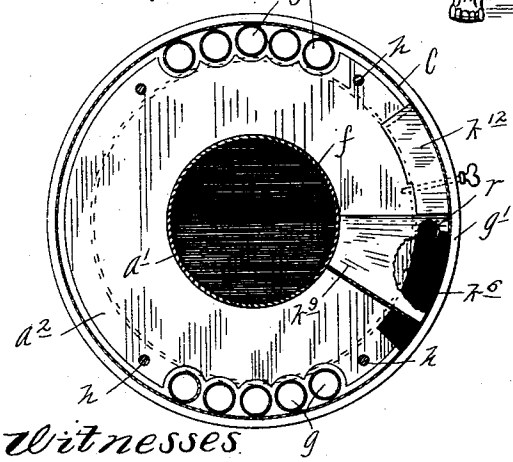

Fig. 3.

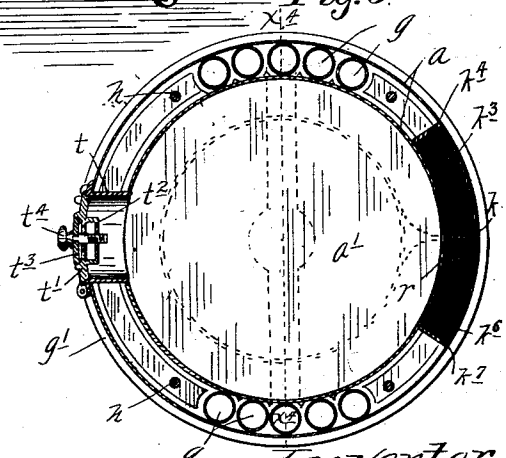

Witnesses.

C. F. Kilgore

E. D. Merchant.

Inventor

Charles W. Aldrich.

By his Attorney

Jas. F. Williamson.

THE NORRIS PETERS CO., PHOTO-LITHO., WASHINGTON, D. C.

(No Model.) 2 Sheets—Sheet 2.

C. W. ALDRICH.

HEATER.

No. 590,447. Patented Sept. 21, 1897.

Fig. 4.

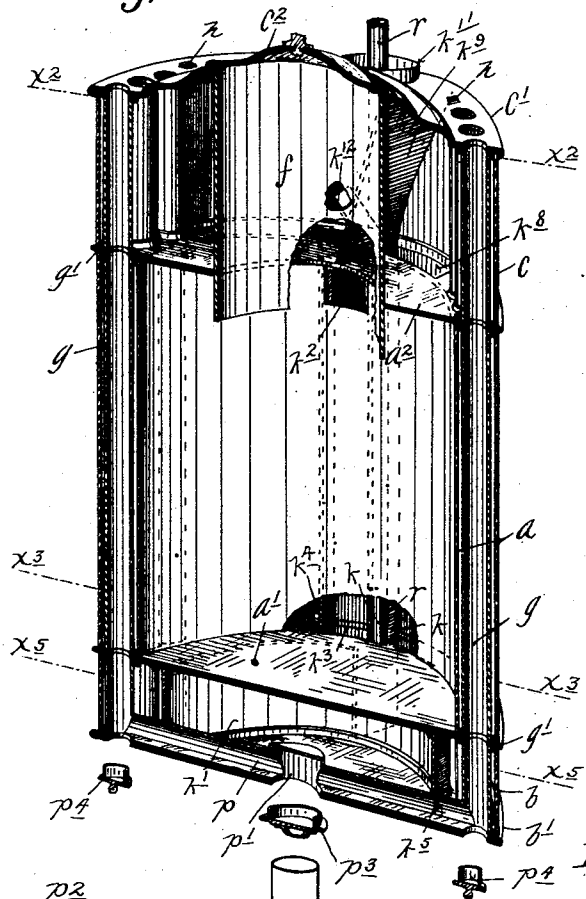

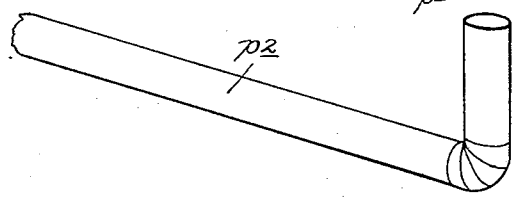

Fig. 5.

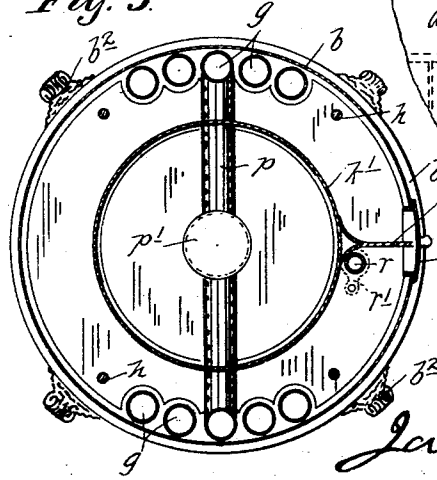

Fig. 6.

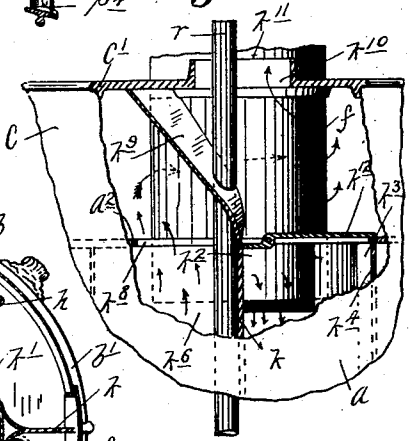

Witnesses.
C. F. Kilgore
R. D. Merchant.

Inventor
Charles W. Aldrich.
By his Attorney.
Jas. F. Williamson

THE NORRIS PETERS CO., PHOTO-LITHO., WASHINGTON, D. C.

UNITED STATES PATENT OFFICE.

CHARLES W. ALDRICH, OF MINNEAPOLIS, MINNESOTA.

HEATER.

SPECIFICATION forming part of Letters Patent No. 590,447, dated September 21, 1897.

Application filed January 11, 1897. Serial No. 618,699. (No model.)

To all whom it may concern.

Be it known that I, CHARLES W. ALDRICH, a citizen of the United States, residing at Minneapolis, in the county of Hennepin and State of Minnesota, have invented certain new and useful Improvements in Heaters; and I do hereby declare the following to be a full, clear, and exact description of the invention, such as will enable others skilled in the art to which it appertains to make and use the same.

My invention relates to heaters, whether in the form of stoves or furnaces, and has for its object to improve the same, with a view of increased efficiency in action and greater simplicity and decreased cost in construction.

To these ends my invention consists of the novel devices and combinations of devices which will be hereinafter described, and defined in the claims.

My invention is illustrated in the accompanying drawings, wherein, like letters referring to like parts throughout the several views—

Figure 1 is a perspective view of the preferred form of my improved heater. Fig. 2 is a cross-section of the same through the upper radiator or substantially on the line $x^2 x^2$ of Fig. 4, with some parts broken away. Fig. 3 is a similar section through the combustion-chamber or central section of the heater substantially on the line $x^3 x^3$ of Fig. 4. Fig. 4 is a view, chiefly in vertical section, on the line $x^4 x^4$ of Figs. 3 and 5, but partly in perspective, with some of the parts separated from each other and with some portions broken away. Fig. 5 is a horizontal section on the line $x^5 x^5$ of Fig. 4; and Fig. 6 is a detail, with some parts broken away and others shown in section, looking at the back of the stove.

A double-walled shell a coöperates with a pair of horizontal partition-plates or diaphragms a' and a^2 to form the central section or combustion-chamber of the heater. A similar single-walled shell b coöperates with the diaphragm a' and a base or leg plate b' to form the lower section or bottom radiator of the heater. A third single-walled shell c cooperates with the diaphragm a^2, a top plate c', and a removable cover c^2 to form the upper section or top radiator of the heater. A removable feed-magazine f is provided which is adapted to rest on the rim of the top plate c' and is of sufficient length to extend downward through the diaphragm a^2 into the interior of the central section or combustion-chamber for the supply of fuel thereto. The top of the magazine f is adapted to be closed by the cover-section c^2 of the stove-top. The walls of the cylinder-section a are spaced apart sufficiently far to afford passage-ways for a series of air-flues which are built up in sections g of lengths corresponding to the respective cylinders, and which communicate with each other through suitable openings in the diaphragms a' and a^2 and open into the room through corresponding passages in the bottom or base plate b' and the top plate c'. These air-flue or tube sections g connect to the respective plates a' a^2 b' c' by suitable joint-shoulders g', so as to afford a sufficiently tight joint, while permitting the same to be readily taken apart or put together and to be held in working position along with all the other parts by the common tie-rods h.

At the back the central cylinder a is divided by a vertical flue-strip k, extending between the walls thereof from the diaphragm a^2 downward, through the cylinders a and b, to the bottom or base plate b'. Thence the flue-strip k joins to a curved or cylindrical flue k', located in the bottom radiator and dividing the same into two concentric chambers, as best shown in Figs. 4 and 5. The combustion-chamber is provided with an outlet k^2 at its back directly below the diaphragm a^2 and adjacent to one side of the vertical flue-strip k, opening into a down flue k^3, formed by the said vertical strip k and coöperating vertical strip k^4. Thence the products of combustion pass into the outer chamber of the bottom radiator and around the curved flue-strip k' therein to an outlet k^5 therefrom opening into an up flue k^6, formed by the vertical strip k and a coöperating vertical strip k^7. The up flue k^6 connects with the top radiator through an opening k^8 directly below a deflecting and dividing strip k^9. Thence the products of combustion pass through the top radiator around the feed-cylinder f to the back of the stove, and thence through outlet k^{10} to the smoke-flue k^{11}. For purposes of direct draft an opening is provided in the diaphragm a^2, which is controlled

by a damper k^{12} and leads directly from the top of the flue k^3 into the top radiator, nearly in line with the outlet k^{10} to the smoke-flue k^{11}.

With the construction above described it is obvious that when the direct-draft damper k^{12} is closed the products of combustion from the central or combustion chamber pass first downward to the bottom radiator, thence completely around the same, thence upward to the top radiator, thence completely around the top radiator and out to the smoke-flue, and thence to the chimney. The burning gases are therefore utilized to the fullest extent before reaching their final outlet to the smoke-flue or chimney.

The bottom plate b' rests on suitable supporting-legs b^2, so as to uphold the heater at a short distance above the floor of the room. Air from the room has, therefore, free access to the open lower ends of the flues g, and in passing through the same will become heated, and thence move outward through the open upper ends of the tubes or passages in the top plates c' into the room in a highly-heated condition. A complete circulation of the air in the room will thus be effected. Provision is also made for the admixture of a certain quantity of fresh air from outside the building, if so desired. To this end the bottom plate b' is shown as provided with a cross-tube p, which taps two opposite members of the flue-sections g in the bottom radiator. This cross-tube p is provided with a central opening p', with which an intake-pipe p^2, leading to the exterior of the building, is adapted to connect. When the fresh air is not desired, the opening p' may be closed by a plug p^3. When the intake-pipe p^2 is connected to the cross-tube p for affording a supply of fresh air, plugs p^4 are applied to the lower ends of the tube-sections g, which are tapped by the cross-tube p. Hence with these devices fresh air may be supplied from the exterior of the building and pass through the heater for securing the proper temperature in the room. Provision is also made for leading off the vitiated or bad air from the bottom of the room. To this end a ventilating pipe-tube r extends entirely through the smoke-flue k^6 of the heater and upward into the chimney-flue k^{11}. The lower end of the tube r opens through the base-plate b' and is controlled by a damper r'. This tube r will therefore afford an outlet for a portion of the used or vitiated air from the room into the chimney and thereby maintain proper condition of the atmosphere within the room.

The cylinder b of the bottom radiator is fitted with a clean-out plug s, as shown in Fig. 5.

The combustion-chamber or central section of the heater is fitted with a thimble t, covered by a door t'. The door t' is provided with a bearing-yoke t^2, extending into the thimble, and with a cover t^3, which may be controlled by a hand-screw t^4 for the admission of a small quantity of air to the combustion-chamber or the entire exclusion of air therefrom, as may be desired.

From the foregoing description it will be seen that a heater is provided which is of extremely simple construction and which is highly efficient in action.

It may be further noted that the construction disclosed is adapted to the interchangeable use of the same patterns or parts for different kinds of heaters. For example, by the removal of the diaphragm a^2, cylinder c, and the upper sections of the air-tubes g the top plate c' of the stove could be substituted for the diaphragm a^2, thereby affording a heater with a bottom radiator only. In substantially a similar way, with slight changes, the bottom or leg plate b might be applied in the position shown as occupied by the lower diaphragm a', thereby converting the heater into one having a top radiator only. It is equally obvious that the extra elements of both the top and bottom radiators might be removed and the top and bottom plates be applied to the central cylinder a, thereby affording an ordinary direct-draft heater, with the addition of the air-tubes g passing therethrough.

From the foregoing statements it must be clear that the principle of construction involved is conducive to economy in the first cost or production of the heater.

The heater has been illustrated as designed for use in the same way as the well-known air-tight stoves. It must be obvious that the same construction by proper changes in sizes would be suitable for a furnace.

It will be further understood that minor details might be changed without departing from the spirit of my invention.

What I claim, and desire to secure by Letters Patent of the United States, is as follows:

1. A heater composed of a central or combustion chamber and top and bottom radiating-chambers, with the flues for the products of combustion, disposed to pass the same first downward into the bottom radiator, thence completely around the same, thence upward to the top radiator, thence completely around the top radiator and out to the chimney-flue, substantially as described.

2. The combination with a heater and a fresh-air intake or supply pipe of air circulating and heating tubes within said heater, some of which open below and above into the room, and certain of which are provided with means interchangeably and independently usable for drawing their supply of air either from said intake or from the room, at will, substantially as described.

In testimony whereof I affix my signature in presence of two witnesses.

CHARLES W. ALDRICH.

Witnesses:

JAS. F. WILLIAMSON,

L. C. ELMORE.