2 Sheets—Sheet 1.

H. A. STEARNS.

GATES.

No. 194,312. Patented Aug. 21, 1877.

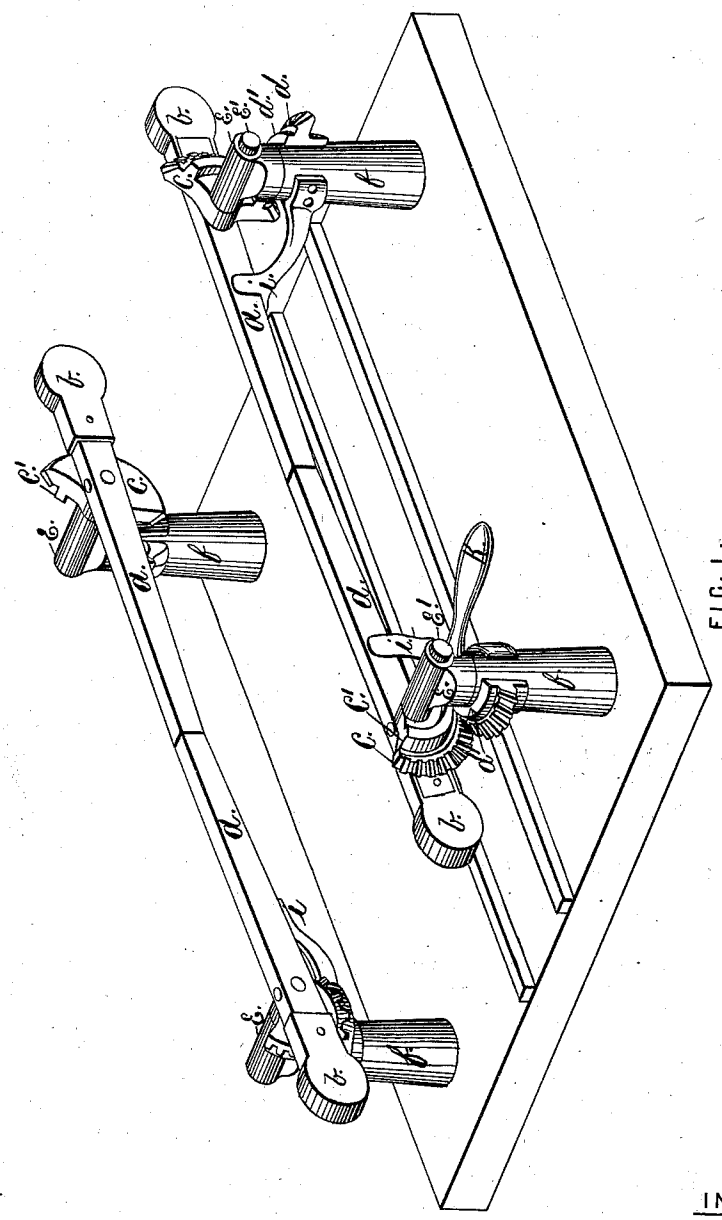

FIG. 1.

WITNESSES,

Ernest C. Barth

J. A. Miller Jr.

INVENTOR.

Henry A. Stearns

by Joseph A. Miller,

Attorney.

N. PETERS, PHOTO-LITHOGRAPHER, WASHINGTON, D. C.

2 Sheets—Sheet 2.

H. A. STEARNS.

GATES.

No. 194,312. Patented Aug. 21, 1877.

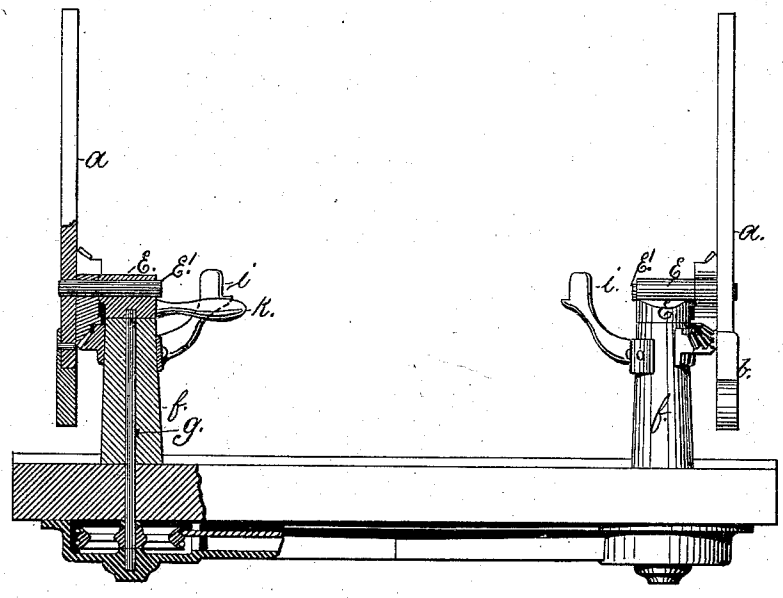

FIG. 2.

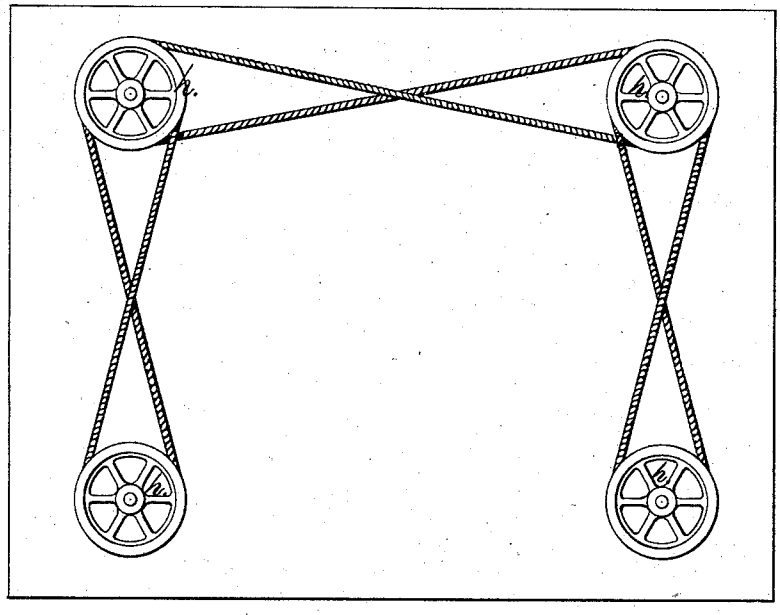

FIG. 3.

WITNESSES.

Ernest L. Barth.

J. A. Miller Jr.

INVENTOR.

Henry A Stearns
by Joseph A. Miller
Attorney

N. PETERS, PHOTO-LITHOGRAPHER, WASHINGTON, D. C.

UNITED STATES PATENT OFFICE.

HENRY A. STEARNS, OF PAWTUCKET, RHODE ISLAND.

IMPROVEMENT IN GATES.

Specification forming part of Letters Patent No. **194,312**, dated August 21, 1877; application filed August 8, 1877.

To all whom it may concern:

Be it known that I, HENRY A. STEARNS, of Pawtucket, in the county of Providence and State of Rhode Island, have invented certain new and useful Improvements in Gates; and I hereby declare that the following is a full, clear, and exact description thereof, reference being had to the accompanying drawings, forming part of this specification.

Figure 1 is a perspective view of my improved gate, showing its application to a common road at the crossing of a railroad. A double gate is shown, one on each side of the railroad, both being operated simultaneously. The gate is shown closed, to prevent teams or persons crossing the railroad. Fig. 2 is a vertical view, partly in section, of my improved gate, the gate-bars being shown as raised, and the gate open. Fig. 3 is a ground plan, showing the manner of connecting the spindles of the different standards to which the gate-bars are connected, so as to operate them simultaneously.

The object of this invention is to construct a gate the bars of which shall be practically balanced, and thus be adapted for operation with the least friction, the parts composing the gate to be arranged in such a manner that they may be readily opened and closed; and, also, two or more gates may be operated by a single person without moving from his position, and with very little exertion on the part of the attendant.

My invention consists in the combination, with a gate-bar provided with a segmental rim, of the standard furnished with a similar rim, adapted to mesh with the rim secured to the gate-bar, whereby the post or standard is relieved from much wear and strain, and the gate-bars are made to describe a spiral line in the direction of the track as the gate is being opened, and away from the track as the gate is closed.

In the drawings, *a a* designate the gate-bars extending across the road or gate-opening, each of said bars being practically counterbalanced by means of the counter-weights *b b*, secured to the short ends of the gate-bars.

Segmental gears C, each formed with a segmental rim, *c'*, are rigidly secured to each gate-bar, and engage or mesh with similar segmental gears *d d*, provided with segmental rims *d'*, which latter are rigidly secured to the upper portion of the gate posts or standards *f*.

E represents a bolster fitted to the upper end of the standard *f*, and secured to the spindle *g*, whereby said bolster may be freely rotated. Shaft E' is rigidly secured to the segmental gear C, and has its bearing in the top bolster E, whereby the gate-bar, while being opened or closed, has a duplex movement, as it is made to partly revolve on its axis E', and at the same time is partly rotated about the standard *f*.

As the segmental rim *c'* of the gate-bar is supported and rolls on the horizontal segmental rim *d'* of the standard, it is evident that the weight and consequent wear will thus be taken from the segmental gears *c d*, and also little resistance will be offered to the free operation of the bars, as rolling friction is secured between the segmental rims *c' d'*, which latter parts support the weight of the gate-bars.

The spindle or vertical shaft *g* is inclosed within the standard *f*, and has the bolster E secured to its upper end, and a sheave or pulley, *h*, attached to its lower end.

The sheaves or pulleys *h* of each standard are connected, by means of chains, wire-rope, or other suitable intervening mechanism, whereby the movement imparted to one gate-bar is simultaneously communicated to the other gate-bars connected therewith. K is a hand-lever secured to the bolster E. By rotating the bolster by means of the handle K the gate-bars may be readily opened and closed.

Brackets *i i* are rigidly secured to the inner sides of standards *f*, said brackets serving as rests or stops to support the gate-bars when they are in a closed position.

The balanced gate-bars may be operated by the expenditure of little power, and, as the segmental rim of the gate is supported by, and rolls upon, the segmental rim of the post or standard, the shaft E is relieved from much friction, and is not liable to become bent, and thus rendered useless.

When the bolster E is rotated, the segmental rim *c'* rolls on the rim *d'*, and as the segmental

gears engage with each other the gate-bar will move both horizontally and vertically, describing a spiral line from its horizontal to its vertical position. This peculiar movement of the gate-bars is preferable to the vertical or horizontal movement of the ordinary gate-bars, as it serves to prevent accidents occurring by reason of persons hurriedly crossing a railroad-crossing just before the closing of the gates; and, again, it is adapted to be opened much quicker than ordinary gates of this class. Again, the movement of the gate-bars constructed in accordance with my invention is not as liable to frighten animals as gate-bars having only a vertical movement.

The simultaneous action of two or more gate-bars is secured by means of the segmental gears, and, to further insure such action, the chains or wire-ropes are preferably secured at their ends to the sheaves or pulleys, and thus effectually prevent any slipping of the chains on the pulleys.

The casings within which the pulleys and chains or ropes are located are made water-tight, so as to exclude ice, snow, and dirt from the gate-operating mechanism.

Having fully described my invention, what I claim as new, and desire to secure by Letters Patent, is—

1. The combination, with the gate-bar *a*, pivoted to rotating bolster E, of the segmental rims *c' d'*, secured respectively to the gate-bar and standard, substantially as for the purpose set forth.

2. The combination, with the gate-bar *a*, pivoted to rotating bolster E, of the segmental gears *c d*, secured respectively to the gate-bar and standard, substantially as and for the purpose set forth.

3. The combination, with the gate-bar *a*, pivoted to rotating bolster E, of the segmental gear *c*, provided with a bearing-rim, *c'*, and the segmental gear *d*, formed with a bearing-rim, *d'*, the gears secured respectively to the gate-bar and standard, substantially as and for the purpose set forth.

4. The combination, with the gate-bar *a*, having a counter-weight, *b*, secured to its outer end, said gate-bar pivoted to the rotary bolster E, of the segmental gears *c d*, secured respectively to the gate-bar and standard, substantially as and for the purpose set forth.

5. The combination, with a gate-bar, *a*, counterbalanced by a weight, *b*, secured to its outer end, of the rotating bolster E, and segmental gears *c d*, each provided with bearing-rims *c' d'*, and secured respectively to the gate-bar and standard, substantially as and for the purpose set forth.

6. A gate consisting of two gate-bars, *a a*, pivoted in rotating bolsters E E, and adapted to be actuated by means of the segmental gears *c d*, secured respectively to the gate-bars and standards, substantially as and for the purpose set forth.

7. The combination, with posts *f f*, located upon opposite sides of the gate-opening, of two gate-bars, *a a*, pivoted to rotating bolsters E E, with the segmental gears *c d*, each of which is provided with bearing-rims *c' d'*, the said gears being secured respectively to the gate-bars and standards, substantially as and for the purpose set forth.

8. The combination, with the counterbalanced gate-bars *a*, pivoted to rotary bolsters E, of the segmental gears *c d*, secured respectively to the gate-bars and standards, and intervening mechanism, substantially as described, whereby the several gate-bars may be operated simultaneously, substantially as and for the purpose set forth.

9. The combination, with the gate-bars *a*, pivoted to rotary bolsters E, of the segmental gears *c d*, secured respectively to the gate-bars and standards, the bolsters E being rigidly secured to spindles *g*, and actuated by means of connecting chains, rods, or wires, substantially as and for the purpose set forth.

10. The combination, with one or more gates, constructed and arranged substantially as described, of the hand-lever K, secured to one of the rotary bolsters E, substantially as and for the purpose specified.

11. The combination, with the gate-bars *a*, and posts *f*, of stops or rests *i*, substantially as and for the purpose specified.

HENRY A. STEARNS.

Witnesses:

JOSEPH A. MILLER,

HORACE F. HORTON.