J. A. SEYMOUR.

PUMP MECHANISM.

APPLICATION FILED OCT. 12, 1914.

1,261,061.

Patented Apr. 2, 1918.

2 SHEETS—SHEET 1.

Fig. 1.

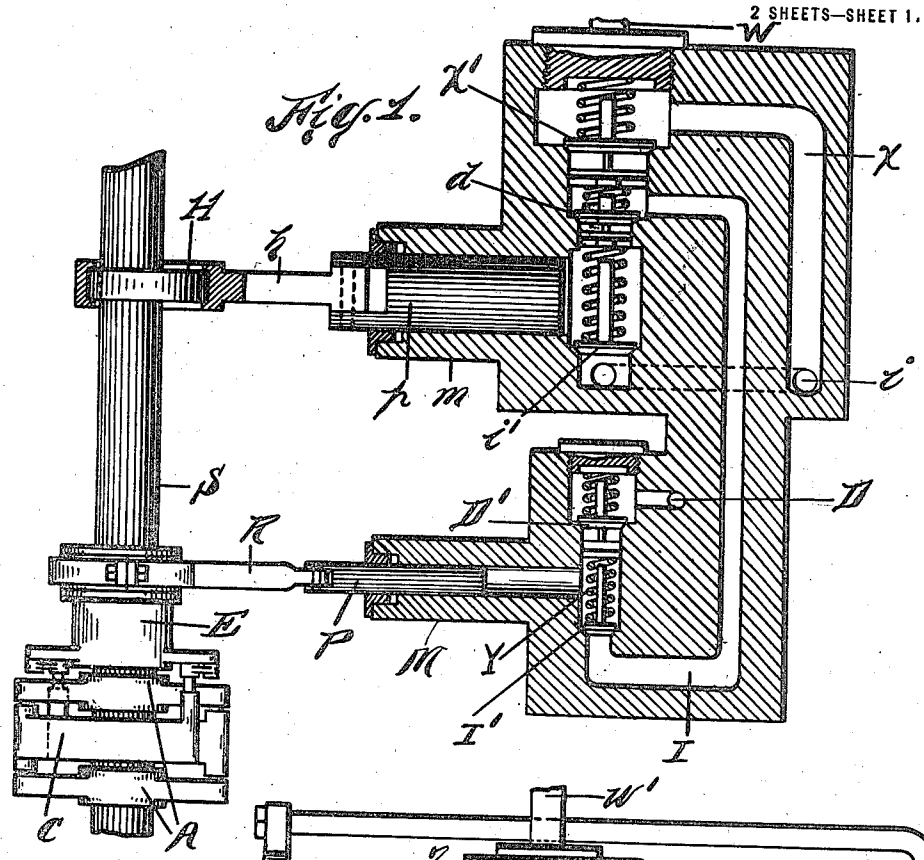

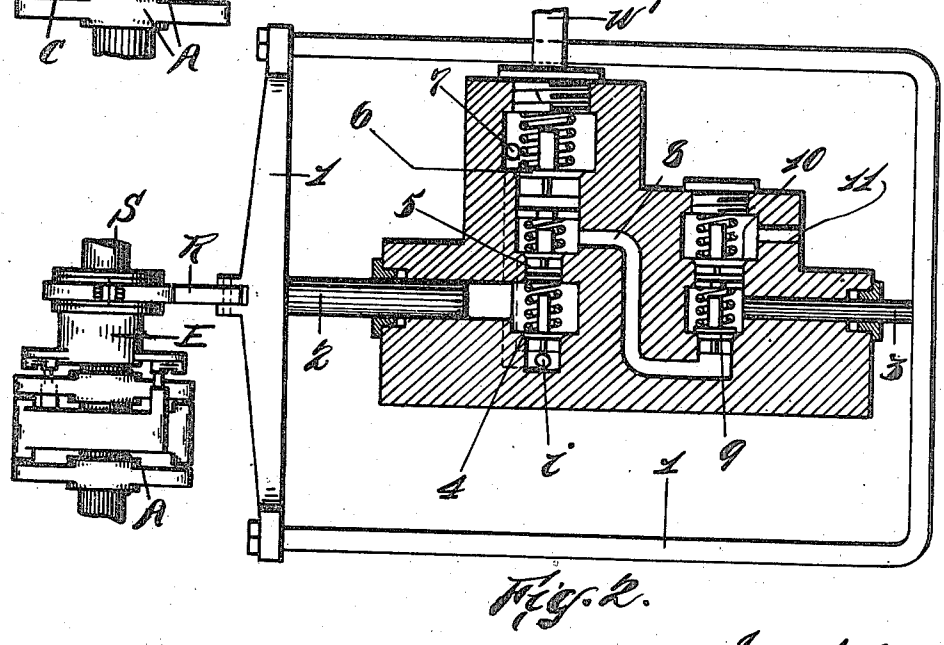

Fig. 2.

Witnesses
C. A. Jarvis
C. Bernstein

Inventor
James A. Seymour
by Newell & Neal
attorneys.

J. A. SEYMOUR.

PUMP MECHANISM.

APPLICATION FILED OCT. 12, 1914.

1,261,061.

Patented Apr. 2, 1918.

2 SHEETS—SHEET 2.

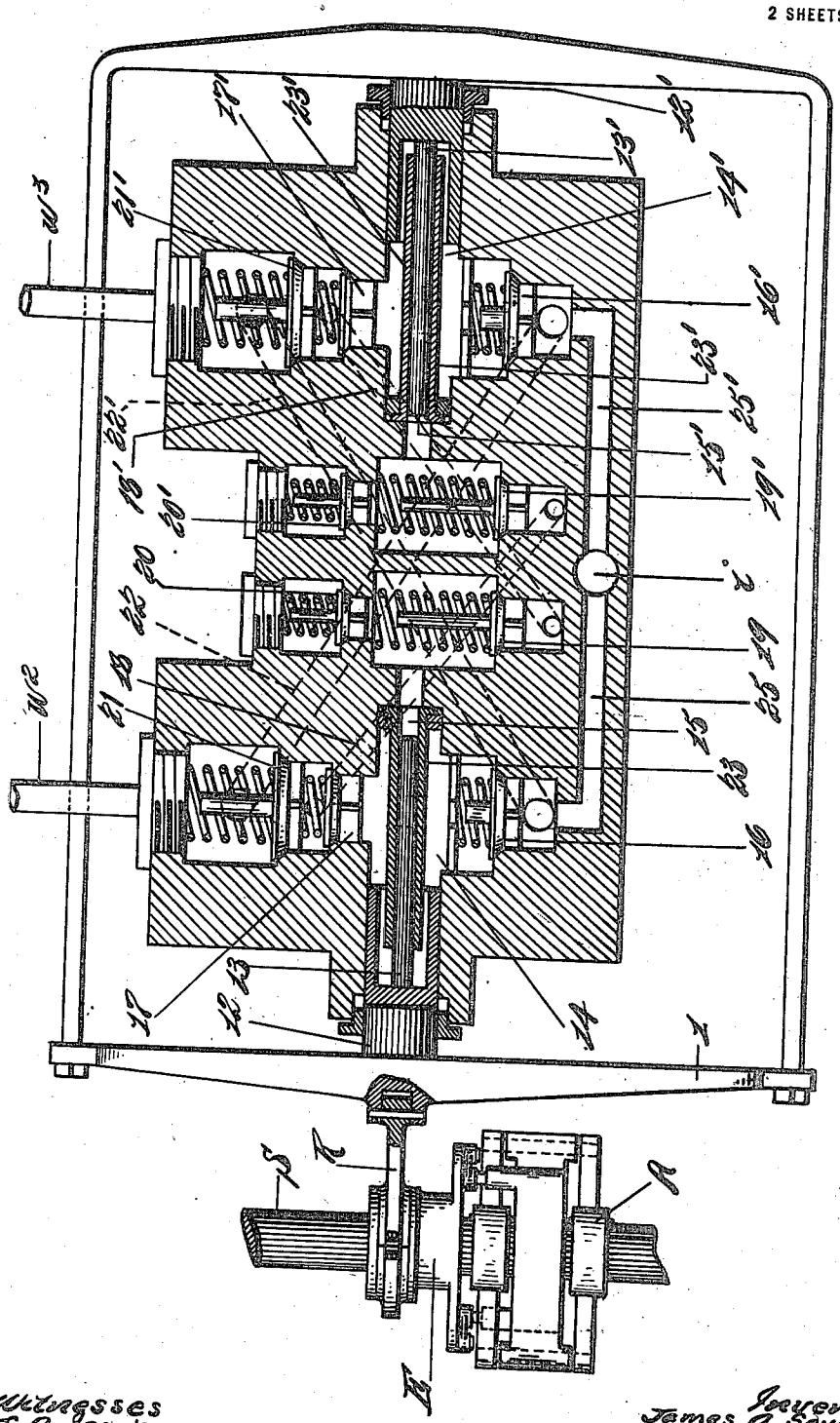

Fig. 3.

Witnesses
C. A. Jarvis
A. Bernstein

Inventor
James A. Seymour
by Newell & Neal
attorneys

UNITED STATES PATENT OFFICE.

JAMES A. SEYMOUR, OF AUBURN, NEW YORK.

PUMP MECHANISM.

1,261,061. Specification of Letters Patent. Patented Apr. 2, 1918.

Application filed October 12, 1914. Serial No. 866,183.

To all whom it may concern:

Be it known that I, JAMES A. SEYMOUR, a citizen of the United States, residing at Auburn, New York, have invented certain new and useful Improvements in Pump Mechanism, of which the following is a clear, full, and exact description.

This invention relates to an improvement in reciprocating pumps which is designed to avoid the disadvantages of a low and uncertain volumetric efficiency which occurs in a small high speed pump when pumping very thick and heavy oils against a heavy pressure, or other fluids which interfere with the proper working of the suction valves of a pump of ordinary construction.

The present improvement aims at obtaining a consistent and uniform performance from a pump whether the plunger of said pump be operated at long or short strokes, and is especially adapted for use in supplying oil fuel to hydrocarbon engines.

The various advantages of my invention will become more apparent from the following description and the accompanying drawings which show the preferred embodiment thereof.

Referring to the drawings, Figure 1 is an elevation of the compound pump partly in section; Fig. 2 is a similar view of a modification; and Fig. 3 is a similar view of a still further modification.

Referring more particularly to the drawings, S indicates a driving shaft for the pump which, in the case shown, is preferably the governor shaft of an engine having a shaft governor A mounted thereon, the particular construction of which is shown and described in my co-pending application Serial No. 864,222, filed February 13, 1914. I have preferably shown the present pump construction in connection with a variable eccentric driving device so as to vary the amount of fluid pumped thereby at each stroke. This arrangement is particularly adapted for use with internal combustion engines employing liquid fuel in which the speed is controlled by varying the amount of fuel fed thereto, but of course is adapted for other uses as well.

Referring to Fig. 1, the main pump plunger indicated at P is reciprocated in the casing M of the main pump by eccentric rod R operated from the eccentric E on shaft S. The eccentric E is preferably movable to different positions on its bearing to vary its eccentricity relative to shaft S and thus vary the length of stroke of pump plunger P. It is to be understood that the position of the eccentric E is controlled by the weights C of governor A, as described in my copending application above referred to, and it is not deemed necessary, for the understanding of the present invention, to describe in detail this driving device since any suitable driving device may be equally well employed for reciprocating plunger P. An auxiliary pump comprising auxiliary plunger p working in chamber m is driven from the shaft S through a fixed eccentric H and eccentric rod h. The auxiliary pump is of larger capacity than the main pump, its plunger p having a displacement which is preferably several times greater than the plunger P of the main pump, and this auxiliary pump is arranged to deliver fluid to the main pump. The auxiliary pump draws fluid from inlet i through inlet valve i^1 and delivers the fluid through outlet valve d, passageway I, to the inlet valve I^1 of the main pump. A relief valve X^1 is provided for the auxiliary pump to permit the escape of the surplus fluid discharged thereby, and a passageway X conducts this surplus back to the inlet i. The auxiliary pump plunger p is connected to the shaft S so as to reciprocate in opposite phase with the plunger P of the main pump. This action causes the auxiliary pump to furnish a pressure head at the inlet for said main pump, in addition to the pressure caused by the normal suction of the plunger P during its intaking stroke, which supplemental pressure head is removed as soon as auxiliary plunger p finishes its expelling stroke. Since the auxiliary pump always furnishes an excess to said main pump under this increased pressure, it will insure the complete filling of chamber of plunger P at each withdrawal of said plunger. The auxiliary pump is preferably worked at low pressures, and the relief valve X^1 is so adjusted that it will open at the desired pressure and permit the return of surplus discharge back to the supply i. By thus producing a supplemental pressure head on the inlet valve I^1 during the intaking stroke of the main plunger P when the valve I^1 should be open, and removing said supplemental pressure head during the expelling stroke when the valve I^1 should be closed, the spring Y of said valve may be made of considerable stiffness so that said

valve I^1 will be operated with more certainty than if dependent only upon the working of plunger P. This arrangement will lessen the uncertainty of volumetric efficiency of the pump at comparatively short strokes of the pump plunger. In other words, the volumetric efficiency of the main pump P will be always the same for the same stroke whether said stroke be long or short, and this is of particular advantage in a pumping mechanism used for supplying oil fuel to a hydrocarbon engine in which the supply of fuel and the running of the engine is regulated by a variation in the stroke of the pump plunger.

It will be noted that plunger P begins its intaking stroke at the same moment that plunger *p* begins its discharging stroke. At this moment also both of the valves *d* and X^1 open and remain open during the entire discharging stroke of plunger *p*. A certain proportion of the discharged fluid is continually passing through valve X^1 throughout this discharging stroke of plunger *p*, the amount at any instant depending upon the difference in rate of displacement between plungers *p* and P.

It may be desirable in some instances to eliminate the valves in the auxiliary pump, in which case the same results can be accomplished by making the size of the passageways *i* and X leading to the inlet of the auxiliary pump, small in comparison to the passageway I leading from the outlet of the auxiliary pump. The restricted passageways *i* and X will then cause the fluid at each discharging stroke of pump *p* to prefer the freer passageway I leading to the inlet of the main pump and thus insure the filling of its chamber as before.

W is a stand pipe connected to the highest part of the pump passageways to permit the escape of air therefrom. It is understood that this stand-pipe leads to the atmosphere at some level above the source of supply.

In the modification of the invention shown in Fig. 2, 3 indicates the main forcing plunger adapted to work against high pressures, and 2 indicates the auxiliary pump plunger adapted to work against low pressures, and these plungers are preferably connected together by a frame 1 and driven by the eccentric E so as to reciprocate together in opposite phase. As shown, the auxiliary pump draws fluid from the supply *i* through inlet valve 4, and feeds fluid through outlet valve 5, passageway 8, and the inlet valve 9 of the main pump. 10 indicates the outlet valve for the main pump, and 11 indicates the outlet of said main pump. 6 indicates the relief valve for the auxiliary pump; and 7 the return passageway from said relief valve back to the supply *i*. W^1 is a stand pipe for escape of air.

It will be noted that both pump plungers 2 and 3 are driven from the same eccentric E, which in this case as in the case of the construction shown in Fig. 1, may have its eccentricity varied to vary the stroke of said plungers.

Fig. 3 shows an arrangement in which two duplex pumps are cross-connected to supply one another. Each duplex pump consists of a large plunger indicated at 12 and 12^1 and small plunger indicated at 13, 13^1, working in large chambers indicated at 14, 14^1 and small chambers indicated at 15, 15^1. The small chambers 15, 15^1 are formed by tubular sleeves 23, 23^1 extending for some distance within the large chambers 14, 14^1 and surrounding the plungers 13, 13^1 so that an extensive sliding fit is provided between each sleeve and its plunger to prevent leakage therepast when no other packing is used. The inlet from the source of supply is at *i*, and passageways 25 and 25^1 lead therefrom to the inlet valves 16, 16^1 respectively. The large chamber of each duplex pump is cross-connected as shown, from the outlet valves 17, 17^1 to the inlet valve 19, 19^1 of the other duplex pump through passageways 18 and 18^1. 21, 21^1 indicate the relief valves for auxiliary plungers of each duplex pump, and 20 and 20^1 indicate the outlet valves for the main forcing plungers of said pumps. The relief valves 21, 21^1 of each duplex pump are also cross-connected as shown by passageways 22, and 22^1 to the inlet valves 16^1 and 16 of the large chambers in the other duplex pump. W^2 and W^3 indicate stand pipes for the escape of air.

The valves 21, 21^1, 17, 17^1 and 16, 16^1 for the large plungers 12, 12^1 may be omitted in a similar manner as that described with respect to Fig. 1, namely, by making the passageways 22, 22^1 and 25, 25^1 small in comparison with passageways 18, 18^1.

The duplex pumps are connected together by means of yoke 1 so as to reciprocate in opposite phase and are driven in the usual way from the eccentric E through rod R. In the operation of this duplex pump there is a saving of energy in that no surplus fluid is returned to the source of supply to be pumped out over again. The surplus overflow from the outlet of each large chamber is conducted to the inlet of the other large chamber and this necessitates only a proportionately small additional quantity to be drawn from the source of supply.

Since the plunger of each large chamber will draw in at each stroke more fluid than the surplus from the other large chamber, no part of this surplus will therefore be returned to the source of supply.

It is understood that various changes and

modifications may be made in the details of the present construction without departing from the spirit of the invention as set forth in the following claims:

What I claim as new is:—

1. In a fluid pump mechanism, in combination, a main pump comprising a main reciprocating plunger, a variable eccentric driving device for operating said main plunger with strokes of different length, an auxiliary pump for supplying fluid to said main pump comprising an auxiliary reciprocating plunger of sufficiently greater displacement than said main plunger that said auxiliary pump tends to oversupply said main pump during the different strokes of said main plunger.

2. In a fluid pump mechanism, in combination, a main pump comprising a main reciprocating plunger, an axuiliary pump for supplying fluid to said main pump comprising an auxiliary reciprocating plunger of greater displacement than said main plunger and working in opposite phase thereto whereby said auxiliary pump tends to oversupply said main pump.

3. In a fluid pump mechanism, in combination, a main pump comprising a main reciprocating plunger, means for operating said plunger with strokes of different length to vary the capacity of said main pump, an auxiliary pump for supplying said main pump comprising an auxiliary reciprocating plunger of sufficiently greater displacement than said main plunger that said auxiliary pump tends to oversupply said main pump during the different strokes of said main plunger.

4. In a fluid pump mechanism, in combination, a source of supply, a main pump comprising a main reciprocating plunger, an auxiliary pump for supplying fluid to said main pump from said source of supply, comprising an auxiliary reciprocating plunger of greater displacement than said main plunger and working in opposite phase thereto, whereby said auxiliary pump tends to oversupply said main pump, and a relief port for said auxiliary pump communicating with said source of supply.

5. In a fluid pump mechanism, in combination, a source of supply, a main pump comprising a main reciprocating plunger, an auxiliary pump for supplying fluid to said main pump from said source of supply, comprising an auxiliary reciprocating plunger of greater displacement than said main plunger and working in opposite phase thereto, whereby said auxiliary pump tends to oversupply said main pump, a relief port for said auxiliary pump communicating with said source of supply, and a valve for said relief port arranged to open during the entire expelling stroke of said auxiliary plunger.

6. A fluid pump mechanism comprising in combination, a pumping chamber, a plunger working therein, means supplementing the suction of said plunger during its intaking stroke, which tend to supply fluid to said chamber at a greater rate than the rate of displacement of said plunger, said means acting to check the supply of fluid to said chamber after said intaking stroke is completed.

7. A fluid pump mechanism comprising in combination, a pumping chamber, a plunger working therein, means supplementing the suction of said plunger during its intaking stroke which tend to supply fluid to said chamber at a greater rate than the rate of displacement of said plunger, said means acting to check the supply of fluid to said chamber at a time not earlier than the completion of said suction stroke.

8. In a fluid pump mechanism, in combination, a main pump comprising a main pumping chamber and a plunger working therein, an auxiliary pump comprising a reciprocating plunger of greater displacement than said first named plunger and working in opposite phase thereto for supplying at each expelling stroke of said auxiliary pump plunger an excess of fluid to said main pumping chamber, and a relief port for said auxiliary pump open during each entire expelling stroke of said auxiliary pump plunger to take care of said excess supply.

9. In a fluid pump mechanism, in combination, a pair of duplex pumps, each duplex pump comprising large and small pumping chambers with inlet and outlet ports and large and small plungers working in said respective chambers, the outlet port of the large chamber of each duplex pump having communication with the inlet port of the small chamber of the other duplex pump, the plungers of one duplex pump working in opposite phase to the plungers of the other duplex pump, and operating means for varying the stroke of said plungers.

10. In a fluid pump mechanism in combination, a pair of duplex pumps each duplex pump comprising large and small pumping chambers with inlet and outlet openings and large and small plungers working therein, the outlet opening of the large chamber of each duplex pump being connected to the inlet of the small chamber of the other duplex pump, and means for operating the plungers of each duplex pump in opposite phase to the plungers of the other duplex pump.

11. In a fluid pump mechanism in combination, a pair of duplex pumps each duplex pump comprising large and small pumping chambers with inlet and outlet openings and large and small plungers working therein, a source of supply having communication

with the inlets of said large chambers, the outlet opening of the large chamber of each duplex pump being connected to the inlet of the small chamber of the other duplex pump, an overflow relief valve for each large chamber and means for conducting the overflow from each large chamber to the inlet of the other large chamber, and means for operating the plungers of each duplex pump in opposite phase to the plungers of the other duplex pump.

12. In a fluid pump mechanism, in combination, a main pump comprising a main reciprocating plunger, an auxiliary pump for supplying fluid through an inclosed communicating passage to said main pump comprising an auxiliary reciprocating plunger of greater displacement than said main plunger, and working in opposite phase thereto, whereby said auxiliary pump tends to oversupply the main pump, and a relief port for said communicating passage to permit the escape of said excess supply.

13. In a fluid pump mechanism, in combination, a main pump comprising a high pressure plunger, a source of fluid supply, an auxiliary pump for supplying fluid from said source through an inclosed communicating passage to said main pump, said auxiliary pump having a low pressure plunger of greater displacement than said high pressure plunger, and working in opposite phase thereto, a relief port for said communicating passage to prevent excessive pressures therein which would otherwise occur by reason of the difference in displacement between said high pressure and low pressure plungers, said relief port being open to said source of supply during substantially the entire expelling stroke of said low pressure plunger so as to continuously return to said source of supply an amount of fluid representing the difference in rate of displacement between said high and low pressure plungers.

14. In a fluid pump mechanism, in combination, a source of fluid supply, a main pump comprising a high pressure reciprocating plunger, means for varying the stroke of said plunger during the operation of said pump, an auxiliary pump for supplying fluid from said source through an inclosed communicating passage to said main pump, said auxiliary pump having a low pressure plunger of greater displacement than said high pressure plunger and working in opposite phase thereto, a relief port for said communicating passage to prevent excessive pressures therein which would otherwise occur by reason of the difference in displacement between said high pressure and low pressure plungers, said relief port being open to said source of supply during substantially the entire expelling stroke of said low pressure plunger so as to continuously return to said source of supply an amount of fluid representing the difference in rate of displacement between said high and low pressure plungers.

Signed at New York city, N. Y., this 8th day of October, 1914.

JAMES A. SEYMOUR.

Witnesses:
C. T. NEAL,
BEATRICE MIRVIS.