(No Model.) 3 Sheets—Sheet 1.

E. C. BACON.

WIRE ROPE TRAMWAY.

No. 380,011. Patented Mar. 27, 1888.

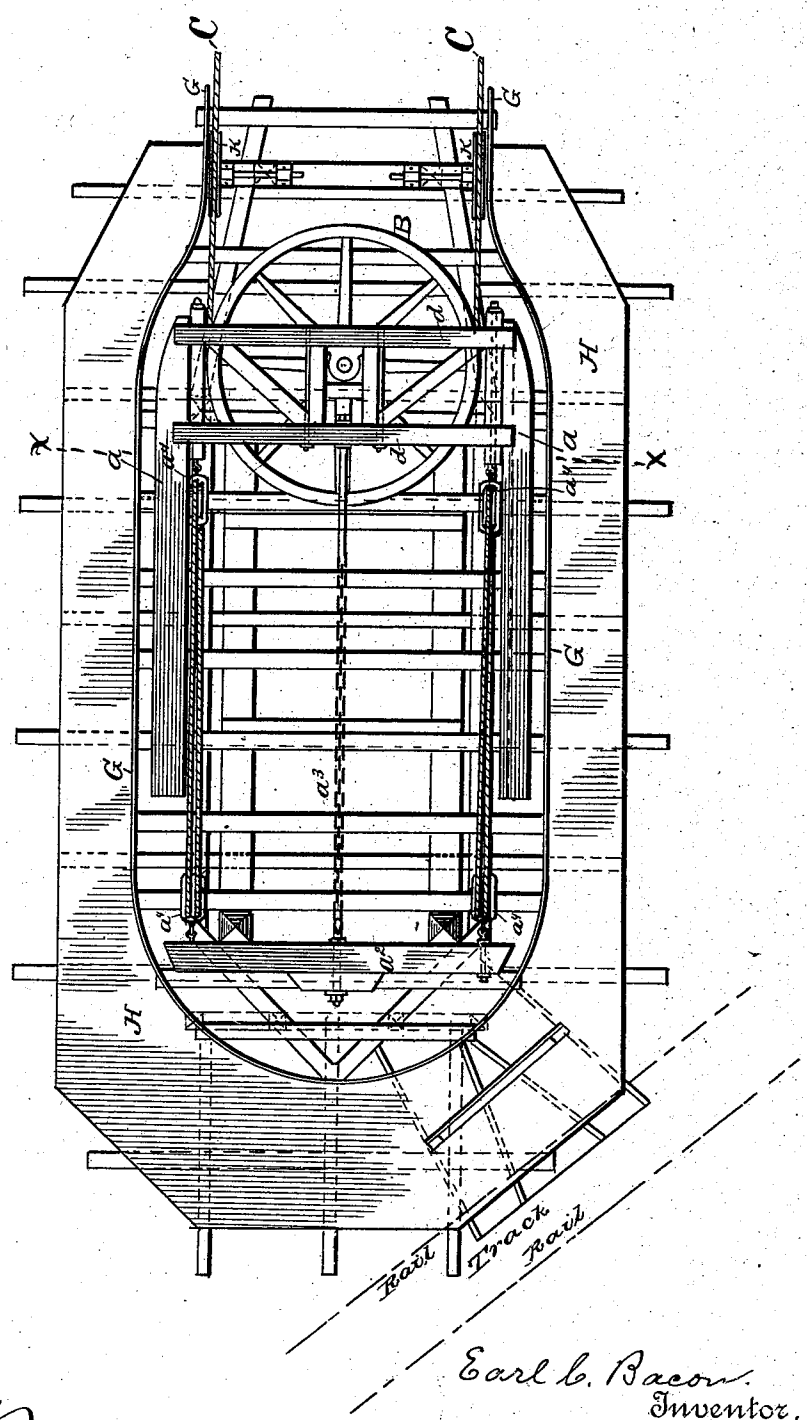

FIG. 1.

Witnesses.
Jos. A. Ryan
Chas. Helm.

Earl C. Bacon.
Inventor.

By his Attorney.
D. B. Gallatin.

N. PETERS, Photo-Lithographer, Washington, D. C.

(No Model.) 3 Sheets—Sheet 2.

E. C. BACON.

WIRE ROPE TRAMWAY.

No. 380,011. Patented Mar. 27, 1888.

FIG. 2.

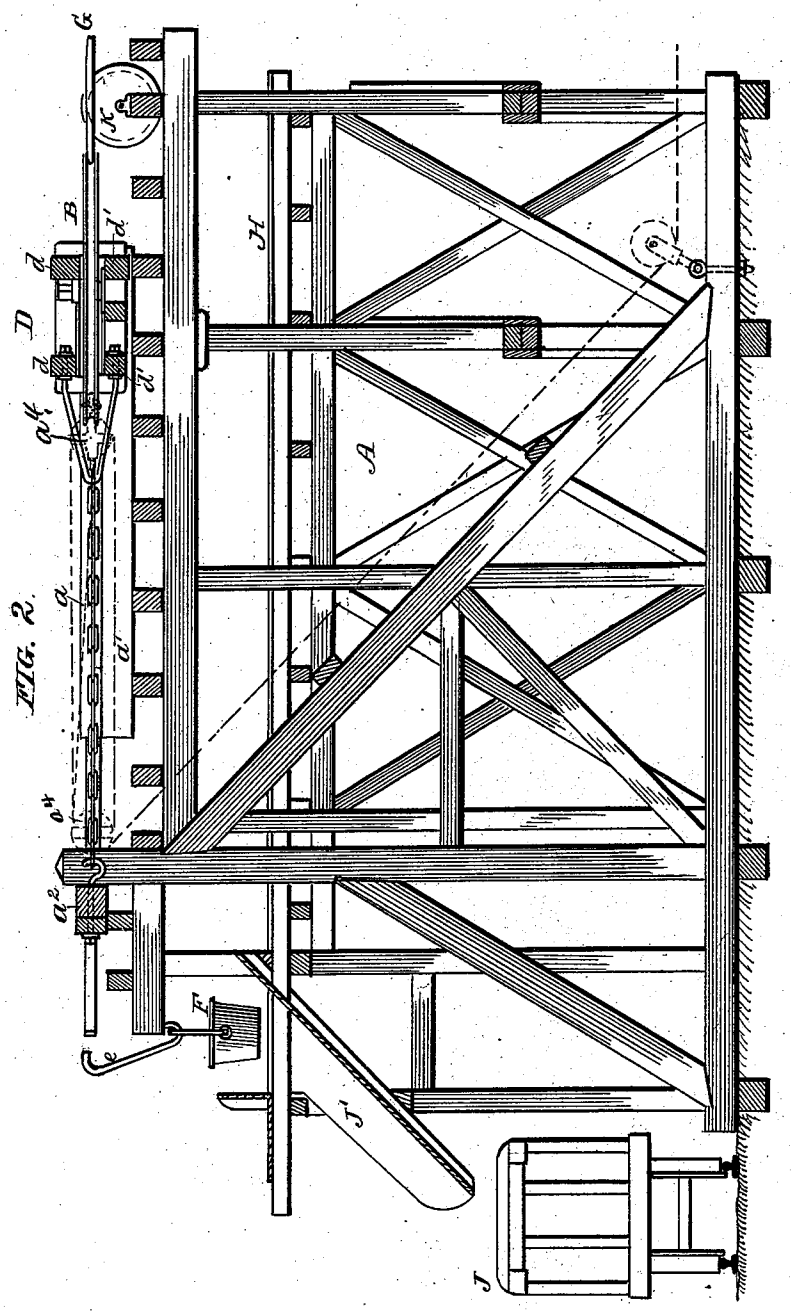

Witnesses.
Jos. A. Rogers,
Chas. Helm.

Earl C. Bacon,
Inventor.

By his Attorney,
D. B. Gallatin.

N. PETERS. Photo-Lithographer. Washington, D. C.

(No Model.) 3 Sheets—Sheet 3.

E. C. BACON.

WIRE ROPE TRAMWAY.

No. 380,011. Patented Mar. 27, 1888.

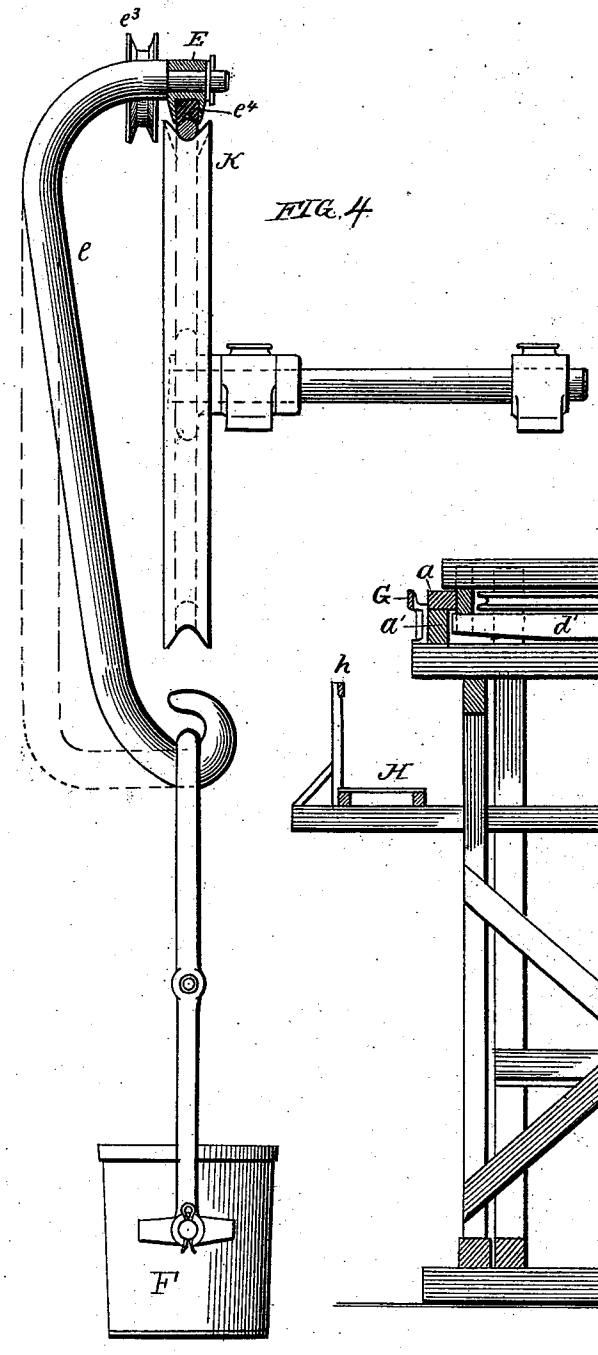

FIG. 4.

FIG. 3.

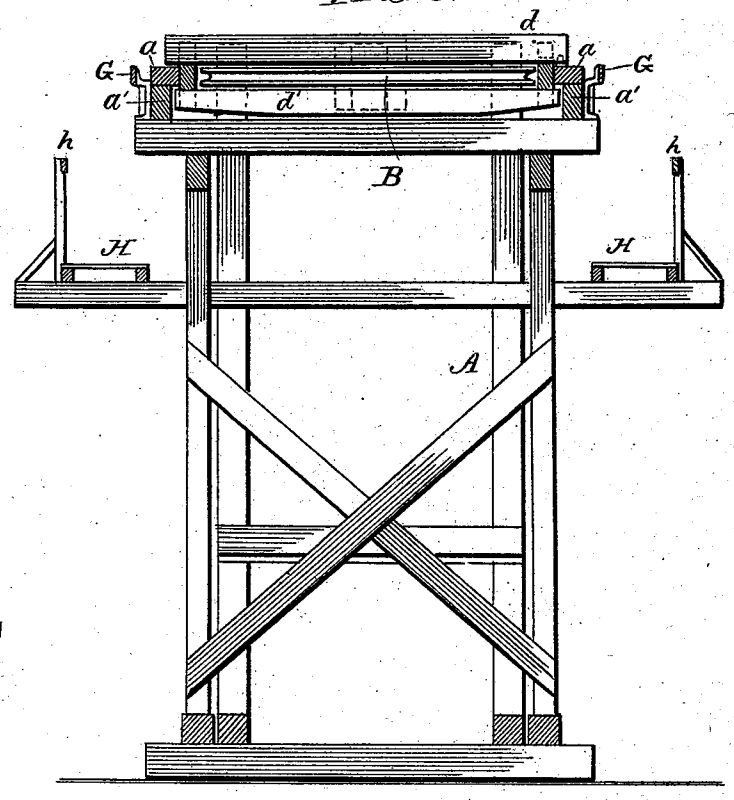

Witnesses.
Jos. A. Ryan.
Chas. Stelm.

Earl C. Bacon.
Inventor.

By his Attorney.
D. B. Gallaher.

N. PETERS, Photo-Lithographer, Washington, D. C.

UNITED STATES PATENT OFFICE.

EARLE C. BACON, OF NEW YORK, N. Y.

WIRE-ROPE TRAMWAY.

SPECIFICATION forming part of Letters Patent No. 380,011, dated March 27, 1888.

Application filed March 16, 1887. Serial No. 231,176. (No model.)

To all whom it may concern:

Be it known that I, EARLE C. BACON, a citizen of the United States, and a resident of New York city, in the county and State of New York, have invented certain new and useful Improvements in Wire-Rope Tramways, of which the following is a specification.

This invention relates to apparatus for conveying articles or substances from one point to another by means of an endless rope which passes around pulleys or wheels located at terminal points, which apparatus, by reason of wire ropes being usually employed, have come to be known as "wire-rope tramways;" and the invention consists, mainly, in the means hereinafter described and claimed for adjusting the apparatus to meet the expansion or contraction of the wire rope by heat and cold, or to take up any slack that may result from the stretching of the rope under the strain of heavy loads.

In the accompanying drawings, which form a part of this specification, Figure 1 represents a plan view of one of the terminal stations; Fig. 2, a longitudinal sectional elevation of the same; Fig. 3, a transverse sectional elevation on the line $x\,x$, Fig. 1; Fig. 4, a detail view showing one of the supporting-pulleys and the relation thereto of the wire rope and carriage as the latter passes over the pulley.

The wheels around which the rope runs are mounted on and supported by a frame-work of sufficient height to meet the requirements of the particular case according to the locality or the use to which the tramway is to be devoted.

The drawings, Figs. 1, 2, and 3, represent the station at the opposite end of the line from that at which the driving-power is applied. Inasmuch as the driving-power is to be applied in the ordinary and usual manner, I have not deemed it necessary to incumber this application with drawings to show the driving-station, as such drawings would show nothing but what is common and well known.

A represents a frame-work of any suitable construction, and, as above stated, of sufficient height to adapt it to the purposes for which the apparatus is to be used. Properly supported upon the top of the frame-work A, and in reality forming a part thereof, are horizontal side rails, $a\,a$, which are parallel to each other, and which form a track upon which is mounted a movable carriage that carries the wheel or pulley B, around which the wire rope C runs at this end of the line. The rails $a\,a$ are supported on longitudinal timbers $a'\,a'$, and their inner edges overhang said timbers, as represented in Fig. 3. The carriage D is constructed of upper and lower cross-timbers, $d\,d'$, properly framed together, and which receive between their ends the projecting or overhanging edges of the rails $a\,a$, as shown best in Fig. 3. This is for the purpose of preventing the carriage from being lifted off or otherwise displaced.

The wheel B is located between the upper and lower timbers of the carriage, and its journals work in boxes or bearings properly secured to the carriage-frame. Thus the wheel is adapted to move back and forth with the carriage to take up any slack in the rope occasioned by stretching, or by expansion from heat, or to yield to the strain occasioned by contraction in cold weather.

At the outer end of the station, and substantially on a level with the wheel B, is a cross-timber, a^2, to which the carriage D is attached by a suitable chain or cable, a^3, to prevent it from being drawn forward, and by the shortening or lengthening of which chain or cable the carriage may be adjusted on its track to compensate for expansion or contraction, as above referred to. As a convenient means for drawing the carriage back to its proper place preparatory to shortening the chain a^3, or to relieve the latter while making either adjustment, blocks and tackle $a^4\,a^4$ are arranged between the carriage and the cross-timber a^2, as represented in Fig. 1 in full lines and in Fig. 2 in broken lines, the rope being represented in the latter figure as running down to the bottom of the frame a, where it may be conveniently hauled on or let out, either by hand or by any of the usual mechanical appliances.

Having thus described my invention, I claim as new—

In a wire-rope tramway, the combination, with a supporting-frame provided with the longitudinal timbers $a'\,a'$, the rails $a\,a$, the up-

per and lower timbers, *d d'*, of the carriage-frame, and the wheel B, located between the upper and lower cross-timbers and journaled in bearings secured to the carriage-frame, of the cross-timber a^2, the blocks and tackle located between the carriage-frame and the cross-timber a^2, and the chain a^3, connecting the carriage-frame and cross-timber a^2, whereby the apparatus may be adjusted to take up slack in the wire rope and compensate for expansion and contraction in the same under heat and cold, substantially as set forth.

In testimony that I claim the foregoing as my invention I have signed my name, in presence of two witnesses, this 9th day of October, 1886.

EARLE C. BACON.

Witnesses:
WILLIAM H. CLARKSON,
ANDREW R. FRYER.