US00D361979S

United States Patent [19]

Shirakawa et al.

[11] Patent Number: Des. 361,979

[45] Date of Patent: ** Sep. 5, 1995

[54] **BATTERY CHARGER FOR RADIO TELEPHONES**

[75] Inventors: **Tomiaki Shirakawa; Takashi Kajita,** both of Tokyo, Japan

[73] Assignee: **Kabushiki Kaisha Toshiba,** Kanagawa, Japan

[**] Term: **14 Years**

[21] Appl. No.: **26,269**

[22] Filed: **Jul. 25, 1994**

[30] **Foreign Application Priority Data**

Feb. 28, 1994 [JP] Japan 6-5015

[52] **U.S. Cl.** **D13/108;** D14/149

[58] **Field of Search** D13/107, 108, 110; D14/142, 140, 149, 240, 253; 320/2-5, 15, 21

[56] **References Cited**

U.S. PATENT DOCUMENTS

D. 307,016	4/1990	Watanabe	D14/240
D. 328,277	7/1992	Leman et al.	D13/108
D. 328,889	8/1992	Seki	D13/108
D. 349,097	7/1994	Watanabe	D13/108
D. 349,273	8/1994	Taylor	D13/108
D. 350,540	9/1994	Hyvonen	D13/108
D. 353,131	12/1994	Nagele	D13/107
D. 354,041	1/1995	Schied et al.	D13/108
D. 354,287	1/1995	Tokiyama	D14/253
5,138,245	8/1992	Mattinger et al.	320/2
5,365,159	11/1994	Chen	320/15

FOREIGN PATENT DOCUMENTS

779548	1/1990	Japan .
787660	5/1990	Japan .

Primary Examiner—Jeffrey Asch

Attorney, Agent, or Firm—Banner & Allegretti, Ltd.

[57] **CLAIM**

The ornamental design for a battery charger for radio telephones, as shown and described.

DESCRIPTION

FIG. **1** is a top, front and right side perspective view of a battery charger for radio telephones showing my new design;

FIG. **2** is a front elevational view thereof;

FIG. **3** is a rear elevational view thereof;

FIG. **4** is a right side elevational view thereof;

FIG. **5** is a left side elevational view thereof;

FIG. **6** is a top plan view thereof; and,

FIG. **7** is a bottom plan view thereof.

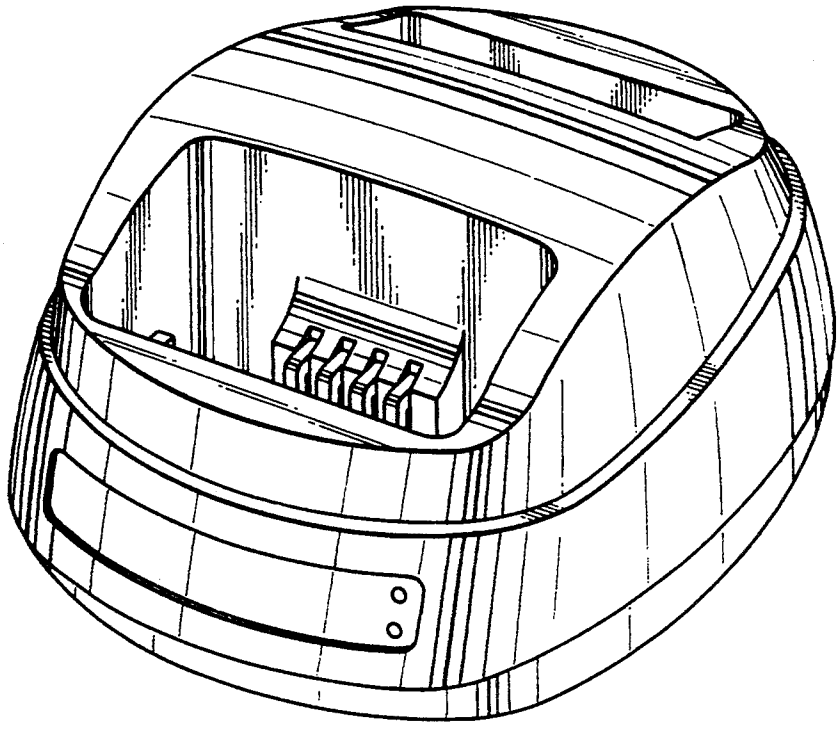

FIG.1

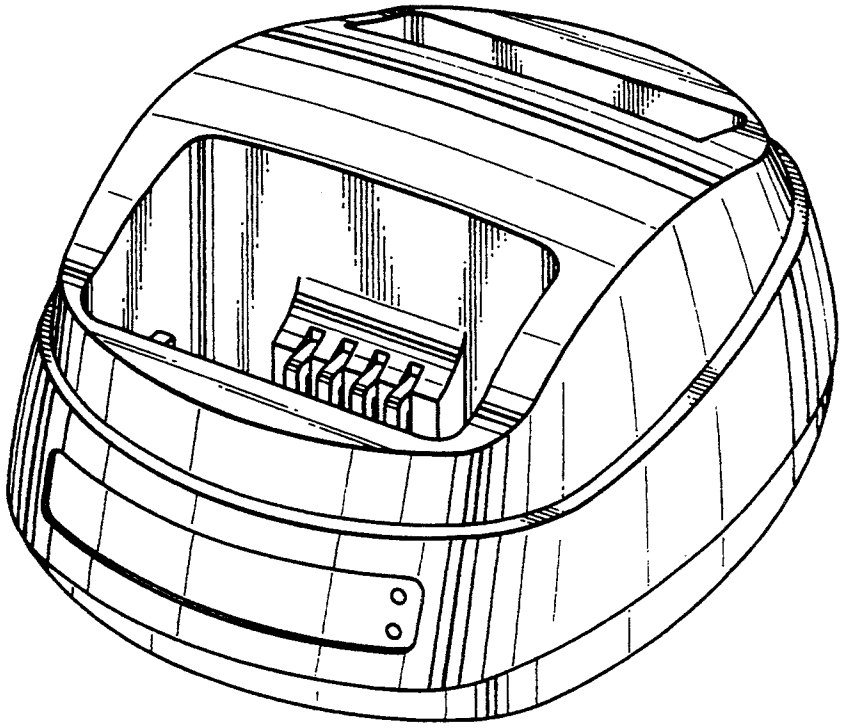

FIG.2

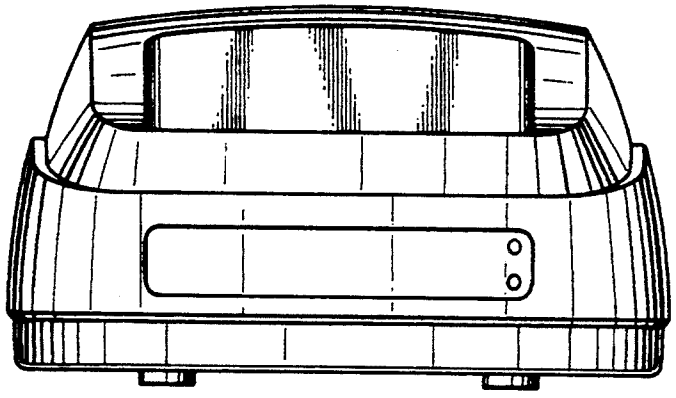

FIG.3

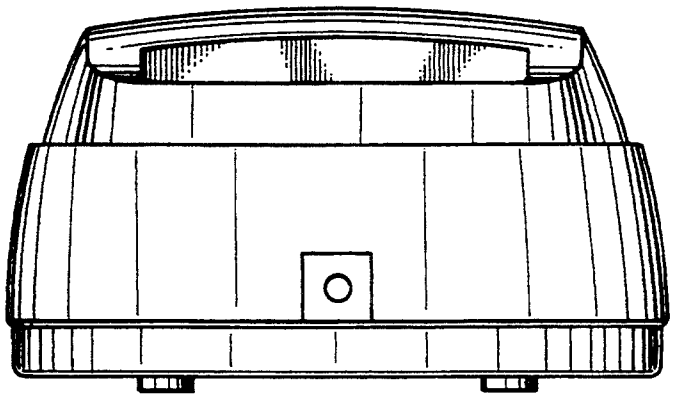

FIG.4

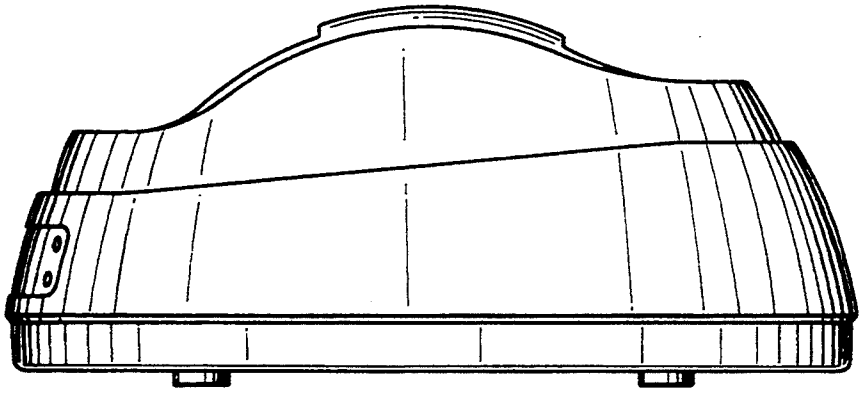

FIG.5

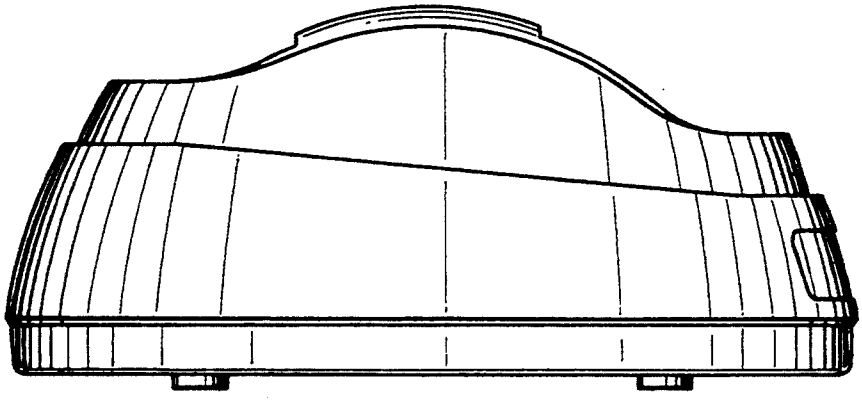

FIG.6

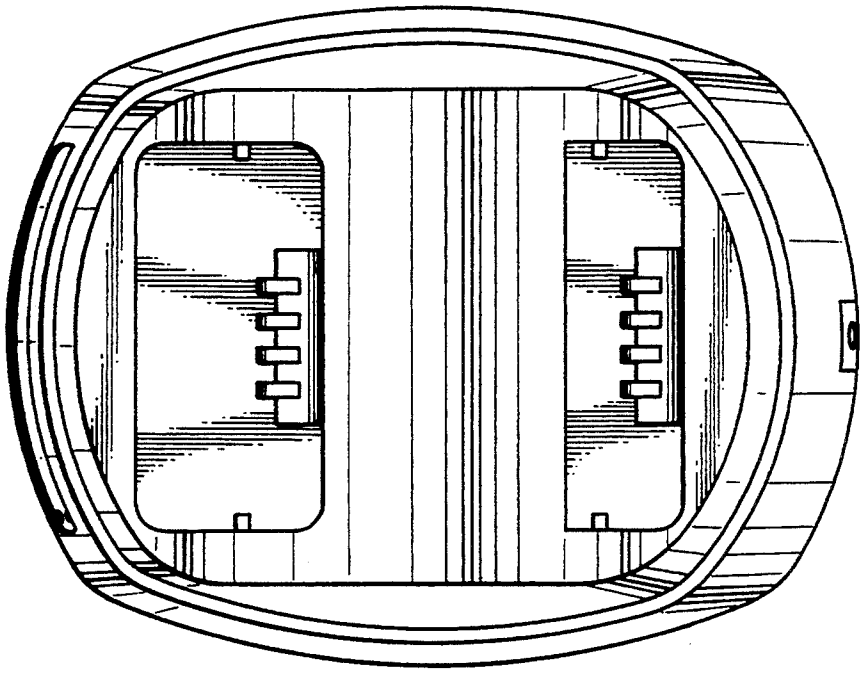

FIG.7

