Sept. 13, 1949. H. H. BORTHWICK 2,481,495

CLOSURE-RELEASE MECHANISM

Filed June 27, 1947

Fig. 1

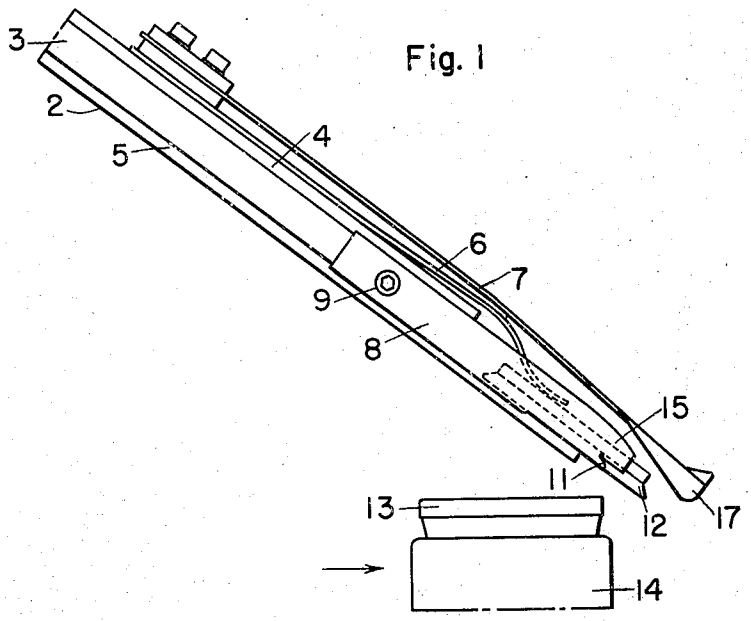

Fig. 2

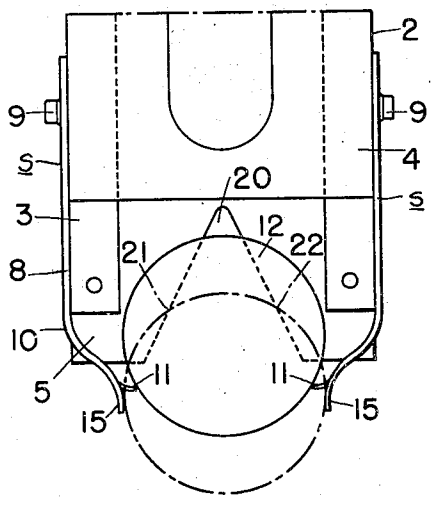

Fig. 3

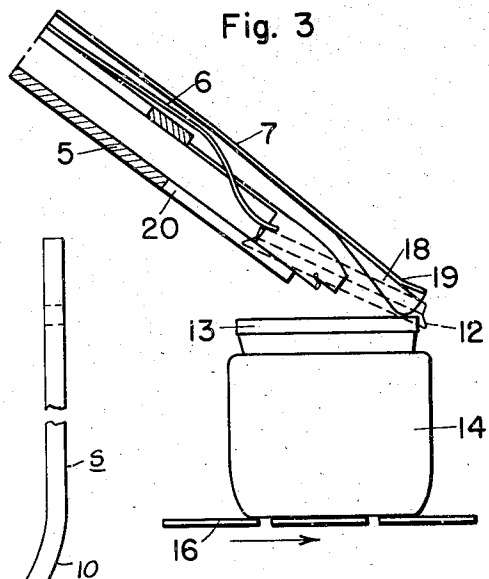

Fig. 4

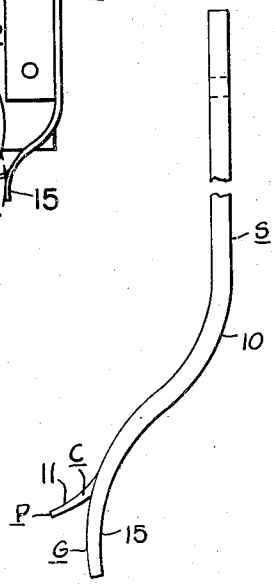

Inventor

Harold H. Borthwick

by

Walter & Kaufman

Attorney

Patented Sept. 13, 1949

2,481,495

UNITED STATES PATENT OFFICE

2,481,495

CLOSURE-RELEASE MECHANISM

Harold H. Borthwick, Lancaster, Pa., assignor to Armstrong Cork Company, Lancaster, Pa., a corporation of Pennsylvania

Application June 27, 1947, Serial No. 757,477

5 Claims. (Cl. 226—88.1)

1

This invention relates to a mechanism for feeding closures to containers. It is concerned particularly with a mechanism for the release of closures incident to application of the closures to containers to be sealed. The invention is particularly useful in the feeding of metal press-on closures to glass containers in steam vacuumizing machines. The invention is useful in the feeding of various types of closures and lids to different kinds of containers, including glass bottles, jars, and metal cans.

An object of the invention is to provide a cap-release mechanism which may be actuated solely by the movement of a jar to be closed, the jar resting upon and being conveyed by frictional engagement with a metal link belt or similar conveyor, obviating the necessity for the use of star wheels, worm conveyors, or the like to positively drive the container.

Another object of my invention is to provide a cap-release mechanism which will exert control of the closure during the initial application of the closure to the container.

A further object of my invention is to provide a cap release in which a cap will be positively positioned in a predetermined location for engagement with the oncoming container to be closed and will be controlled during assembly so as to maintain proper alignment between the container and closure during closure extraction.

Other objects of my invention will become apparent from a consideration of the following detailed description given in conjunction with the attached drawing in which:

Figure 1 is a side elevation illustrating the cap-release mechanism of this invention;

Figure 2 is a top plan view of the apparatus shown in Figure 1 with the cap arrester and cap guiding horns removed;

Figure 3 is a view similar to Figure 1 showing the position assumed by the various parts upon elevation of the container closure above the stops; and

Figure 4 is an enlarged plan view of one of the closure release fingers of Figure 2.

Referring to Figure 1, the mechanism includes a cap chute or track 2 which is inclined with respect to the horizontal. An angle of 37° has been found acceptable. The angle of inclination should be such that closures fed into the chute 2 will move by gravity along the chute to a position in engagement with the cap-release mechanism. A portion only of the chute 2 has been shown. The length of the chute is not important; it generally is long enough to accommodate a few closures. The chute 2 is formed with edge guides 3, a top plate 4, and a bottom plate 5. A pair of arresters 6 is provided for engagement with the top of the closures fed down the chute 2. Guiding horns 7 are also provided.

2

The cap release includes a pair of resilient fingers 8 which are attached to the edge guides 3 at their respective shanks *s* by means of hollow head machine screws 9. The fingers 8 are best shown in Figure 2. They are formed of sheet metal and are preferably made of heat-treated copper beryllium alloy so that they may be repeatedly flexed in the operation of the device without fatigue. Any yieldable fatigue-resistant metal may be used. The fingers 8 are formed as complemental pairs with a right-hand finger and a left-hand finger. The fingers are bent inwardly, as indicated at 10, and each terminates in a stop 11 which is disposed in the path of movement of closures 12 moving down the chute 2.

The stops 11 have closure-engaging portions P as shown in Figure 4, against which the closure lies when its forward motion is arrested, as shown in Figure 2. The spacing between the stops 11 is less than the diameter of the cap 12, and the positioning is so determined that when a cap 12 lies in engagement with the stops 11, its skirt will intersect the path of movement of the lip 13 of a jar 14 moving in a direction of the arrow shown in Figure 1. It will be observed by reference to that figure that the stops 11 are short and may be readily surmounted by a slight upward movement of the cap 12. The height of the stops 11 should, however, be sufficient to prevent the caps moving down the chute from surmounting the stops upon impact therewith and should be high enough to prevent overriding due to vibration incidental to operation of the machine. The stops should be maintained as low as possible in order to facilitate the surmounting of the same by the cap upon impact of the container 14 with the cap 12. The stops 11 have closure-supporting portions C (Figure 4) upon which the edge of the closure skirt may slide during its extraction from the release, as shown in Figure 3.

It will be observed that the stops 11 are directed radially inwardly so that the direction of impact of the cap 12 therewith will be at an angle such that the resultant force will not direct the fingers outwardly in an amount sufficient to pass the cap 12 therebetween. As will be observed from Figure 2, the application of force by the cap 12 to the fingers 11 will be along the longitudinal axis of the cap chute without any substantial

component of force normal thereto which would be required to force the fingers apart.

Disposed above the stops 11 and integral with the fingers 8 are guides 15 which are curved gradually outwardly and are spaced apart a distance which is less than the diameter of the cap 12. The height of the guides 15 is determined to some extent by the depth of the skirt of the cap being fed through the mechanism. The height should be sufficient that the surface G of the guides 15 will engage the skirt of the cap to exercise control of the cap during the extraction movement, the cap being tilted, as indicated in Figure 3, during extraction. Preferably, the guides 15 are so positioned that they engage the cap 12 substantially immediately upon elevation of the cap over the stops 11 with only a minor forward motion of the cap necessary to bring the guides 15 into engagement with the cap forwardly of the center thereof. This is indicated by the chain line in Figure 2. The guides continue to exercise control over lateral movement of the cap by their engagement with the cap periphery during a substantial portion of the forward movement of the cap. As the cap is withdrawn from between the fingers 8, they are sprung outwardly until the fingers engage the periphery of the cap on opposite sides along a line drawn through the center of the cap, and, thereafter, the fingers 8 retract inwardly until the cap has been moved to a position where the distance between the points of engagement of the guides 15 with the periphery of the cap is equal to the normal distance between the guides 15.

The guides 15 are curved so that a substantial component of force is directed outwardly in both directions normal to the axis of the cap chute. Such force causes the fingers to be flexed outwardly about their respective points of connection 9. Thus, the cap is initially restrained against forward motion by the stops 11 forming part of the yielding fingers 8, the curvature of the stops 11 being purposely such that the fingers 8 will not be flexed to any substantial degree by the impact of the cap, and the curvature of the guides 15 being purposely such that the same fingers 8 will be flexed with a minimum effort but will exert adequate force necessary to properly maintain the cap in position.

The force supplied by the fingers 8 in their guiding action is determined to some extent, at least, by the weight of the container and the container contents. If too much force is applied, the container will tend to tilt on the conveyor, and improper cap application will result. By constructing and arranging the fingers as shown and limiting the force to that necessary to exert a proper guiding influence upon the cap, it is possible to apply closures to small four-ounce capacity containers moving on a flat link belt conveyor 16, as shown in Figure 3, without employing a star wheel or other equipment for positively moving the containers through the machine.

The cap arresters 6 serve a triple function: (a) they hold the cap in engagement with the bottom plate 5 of the cap chute, thus preventing the caps from surmounting the stops 11 prior to impact of the container with the cap; (b) they serve to hold the forwardmost cap in a position where the oncoming cap will not override it; and (c) they press the rear edge of the cap into engagement with the bottom plate 5 during the extraction movement.

The guiding horns 7 are preferably formed of heat-treated copper beryllium alloy or other flexible fatigue-resistant material and are made in complemental pairs, one having a left-hand lateral guide 17, as shown in Figure 1, and the other a right-hand lateral guide 18, as shown in Figure 3. The horns may be moved upwardly, being yieldable in that direction from their points of connection with the top plate 4. The horns are so contoured and positioned that the lateral guides 17 and 18 are spaced apart a distance which is slightly greater than the diameter of the top of the cap 12. Each horn is preferably provided with a press-down surface 19 which is adapted to engage the head of the cap as it is extracted from the mechanism. The horns serve to guide the cap laterally and also retard forward motion of the cap at a rate faster than the forward motion of the jar to which the cap is being applied. They serve a third function of forcing the cap downwardly onto the jar as the cap is extracted from the feeding mechanism. The horns are each yieldable independently of the other and independently of the arresters 6.

The bottom plate 5 is cut away, as indicated at 20, to permit the cap 12 to move forwardly and downwardly as the container 14 extracts it from the mechanism, at the same time properly supporting the rear portion of the cap skirt throughout the whole of the extraction movement, insuring proper positioning of the cap on the jar. A tapered opening is preferred because it thus provides a two-point support for the rear edge of the cap, preventing lateral tilting. As will be observed from Figures 2 and 3, as the cap is moved from its position on the bottom plate 5, the edge of the cap skirt will pass through the opening 20, and the cap will be supported at spaced points on its periphery by engagement with the opposite legs of the bottom plate 5, these points being indicated at 21 and 22 in Figure 2.

The bottom plate 5 and the opening 20 are so constructed that the cap being extracted from the mechanism will gradually move from a position where its rim is in engagement with the bottom plate, as indicated in Figure 1, to a position where the closure is in a plane almost parallel with the horizontal plane of the open mouth of the container, as shown in Figure 3, with the cap moving progressively into the opening 20. The opening 20 is such that the closure will drop from the bottom plate, leaving both points of support substantially simultaneously and avoiding any lateral tilting of the cap at the instant of "drop off." The jar and closure at such point are in closely spaced relationship, and the closing motion is short.

The arresters 6, guiding horns 7, and contoured bottom plate 5 are more fully disclosed and claimed in the copending application of Paul Gschwend and John M. Sharf, Serial No. 757,530, filed June 27, 1947, and entitled "Closure-feeding devices."

In the operation of the mechanism, closures 12 are supplied to the chute 2, being preferably fed thereto continuously from a hopper. The lowermost closure as it moves down the chute 2 will come into engagement with the arresters 6 which will hold the closure in engagement with the bottom plate 5 and will slow down the forward motion of the closure as it approaches the stops 11. The stops 11 lying in the path of movement of the closure will limit the forward motion of the closure which will rest in a position with its skirt lying in the path of travel of the container 14. The container is preferably moved on the

conveyor belt which operates continuously and may be part of a mechanism for conveying jars through a vacuumizing machine, such as that disclosed in the copending application of John M. Sharf, Serial No. 757,545, filed June 27, 1947, and entitled "Method and apparatus for sealing containers."

Upon impact of the jar 14 with the closure 12 positioned in engagement with the stops 11, the closure will be elevated over the stops 11 and will be conveyed forwardly by the jar 14. Almost instantaneously with the elevation of the closure over the stops 11, the closure will come into engagement with the guides 15 which will limit the forward motion of the cap and prevent its proceeding in advance of the container. When the jars are rapidly fed through the machine, there is an appreciable impact force applied to the caps, and it is desirable to arrest the forward motion of the cap as quickly as possible so as to maintain the cap in engagement with the lip of the jar as forward motion of the jar continues. The guiding elements 15 yieldingly hold the cap in proper lateral position, and since the guiding elements are integral with the resilient fingers 8, they are spread apart as the cap is extracted but continue to exert a yielding force against the cap, maintaining lateral alignment until the cap is engaged and guided by the horns 7. The lateral portions 17 and 18 of the horns 7 serve to laterally guide the closure as forward motion of the container continues. The arresters 6 apply downward force to the rear edge of the closure, and the rim of the closure is supported at spaced points by the legs of the bottom plate 5. The press-down surfaces 19 of the horns also serve to maintain a downwardly directed pressure on the closure, holding it in engagement with the container. The closure is supported at its forward edge by engagement between the container lip and the closure and at spaced points along the rear surface of the closure skirt by the legs of the bottom plate 5, as previously mentioned. At the drop-off point, the cap has assumed an almost horizontal position, substantially parallel with the plane of the open mouth of the container, and the horns 7 are flexed upwardly, applying a downward pressure to the container. The cap drops off the bottom plate 5, and the force of the horns is effective for snapping the closure down onto the jar.

The closure and container are then fed to a mechanism such as a conventional press-down belt which is effective for setting the closure firmly onto the container and effecting a final hermetic seal.

From the foregoing, it will be clear that with the mechanism of the present invention, it is possible to effect feeding of closures at a rapid rate without the necessity of mechanism engageable with the wall of the container to positively drive the container through the cap releasing and feeding zone and effect cap application. Frictional engagement between the bottom of the container and the conveying belt is adequate, since the release is effective upon the application of slight pressure. At the same time, effective control is exercised over the closure to maintain it in proper alignment with the container to be sealed, and faulty feeding is obviated by the positive stop arrangement.

The invention is particularly useful in vacuum-closing machines, for it is possible with the mechanism of the present invention to apply the closures quickly to the containers as they emerge from the zone where air within the container head space has been replaced with steam or other condensable vapor, the cap being applied without substantial disturbance of the steam within the head space of the container which would result in the contamination of the steam with air.

While I have illustrated and described a preferred embodiment of my invention, it will be understood that the same is not limited thereto but may be otherwise embodied and practiced within the scope of the following claims.

I claim:

1. In a closure-feeding and applying device: a closure release mechanism comprising an inclined chute down which closures may pass; a pair of resilient fingers; and means attaching said fingers to said chute adjacent the lower end thereof for limited flexure each as a unit, each of said fingers comprising: (*a*) a stop, (*b*) a guide disposed above the stop, and (*c*) an attaching shank, said stops lying in the path of movement of closures down the chute, closure-engaging portions on said stops for intersecting the lowermost closure in the chute by engagement with the closure skirt on opposite sides thereof adjacent the edge of the skirt, with the skirt projecting from the chute into the path of movement of a container to be closed moving below the chute, said stops being constructed and arranged to enable the closure to surmount the same upon slight upward movement of the closure resulting from impact of the oncoming jar with the closure held in an inclined position, closure-engaging portions on said guides for contacting the closure skirt on opposite sides thereof upon the closure having surmounted the stops, and closure-supporting portions on said stops upon which the edge of the closure skirt may slide during extraction from between said guides, the limited flexure of the fingers away from each other permitting the closure to pass between the guides while the guides apply guiding pressure to the closure on opposite sides of the skirt, with the edge of the skirt on opposite sides of the closure sliding on the closure-supporting portions of the stops.

2. A cap-release mechanism in accordance with claim 1 in which the yielding guides are curved outwardly so that the component of thrust upon forward motion of the closure is directed outwardly, causing the guides to be spread apart upon forward motion of the closure.

3. A cap-release mechanism in accordance with claim 1 in which the stops are curved inwardly toward the axis of the closure support so that there is no substantial component of thrust outwardly upon movement of a closure into engagement with said stops and in which the yielding guides are curved outwardly so that there is a substantial component of thrust in an outward direction to spread said guides upon forward movement of a closure therebetween.

4. A cap-release mechanism in accordance with claim 1 in which the stops are engageable with the closure skirt at spaced points and in which the yielding guides are engageable with the closure skirt at spaced points slightly to the rear of the points of engagement of the closure with the stops along the direction of travel of the closure, the arrangement being such that upon elevation of the closure over the stops, the skirt of the closure will engage the yielding

guides prior to any substantial forward motion of the closure.

5. A cap-release mechanism in accordance with claim 1 in which the yielding guides engage the closure skirt at spaced points forwardly of the transverse axis of the closure and yieldingly engage the skirt of the closure until the closure has moved to a point where the guides leave the closure at spaced points substantially to the rear of the transverse axis of the closure.

HAROLD H. BORTHWICK.

REFERENCES CITED

The following references are of record in the file of this patent:

UNITED STATES PATENTS

Number	Name	Date
882,728	Wilmore	Mar. 24, 1908
2,386,797	Hohl et al.	Oct. 16, 1945
2,433,549	Enkur et al.	Dec. 30, 1947