Aug. 29, 1933. G. M. THOMSON 1,924,472

METHOD OF AND MEANS FOR MANUFACTURING SOUND ABSORBING MATERIAL

Filed Nov. 28, 1930 2 Sheets-Sheet 1

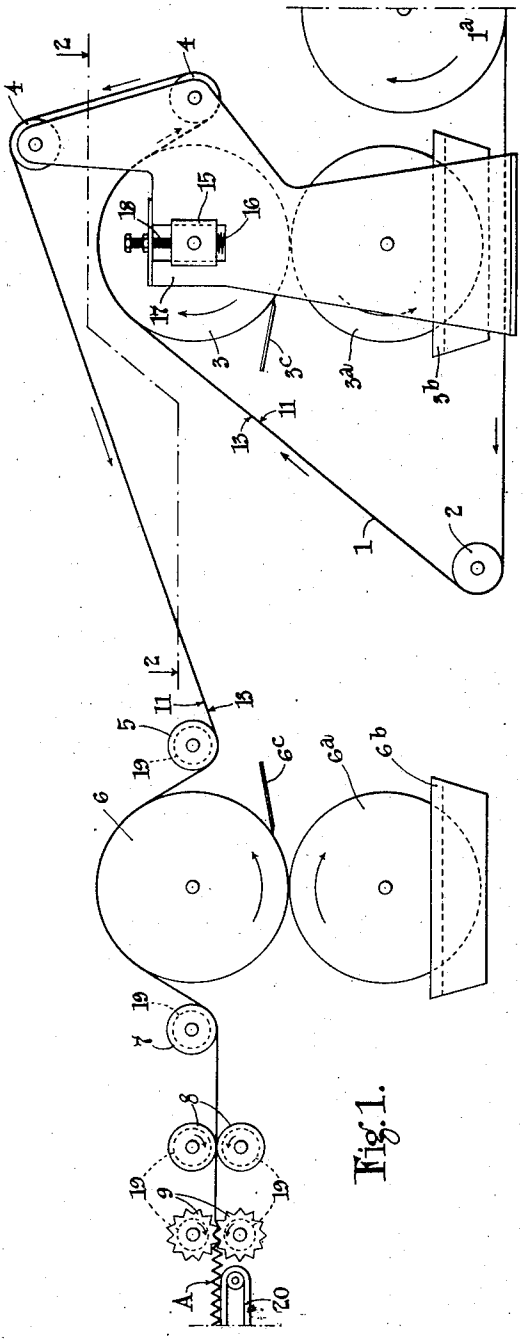

Fig. 1.

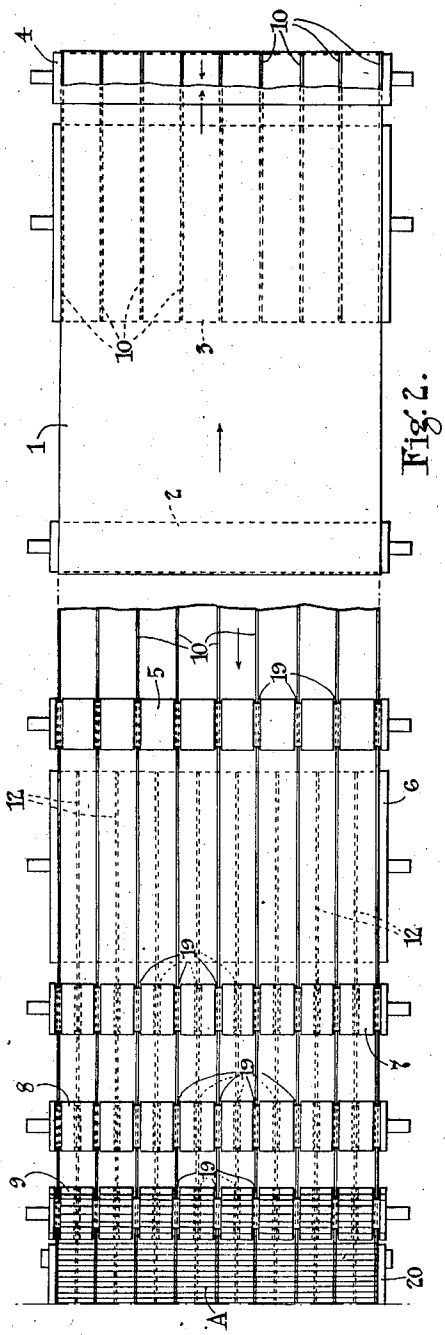

Fig. 2.

INVENTOR:
GEORGE M. THOMSON

Marks & Clerk

BY ATTORNEYS.

Aug. 29, 1933. G. M. THOMSON 1,924,472

METHOD OF AND MEANS FOR MANUFACTURING SOUND ABSORBING MATERIAL

Filed Nov. 28, 1930 2 Sheets-Sheet 2

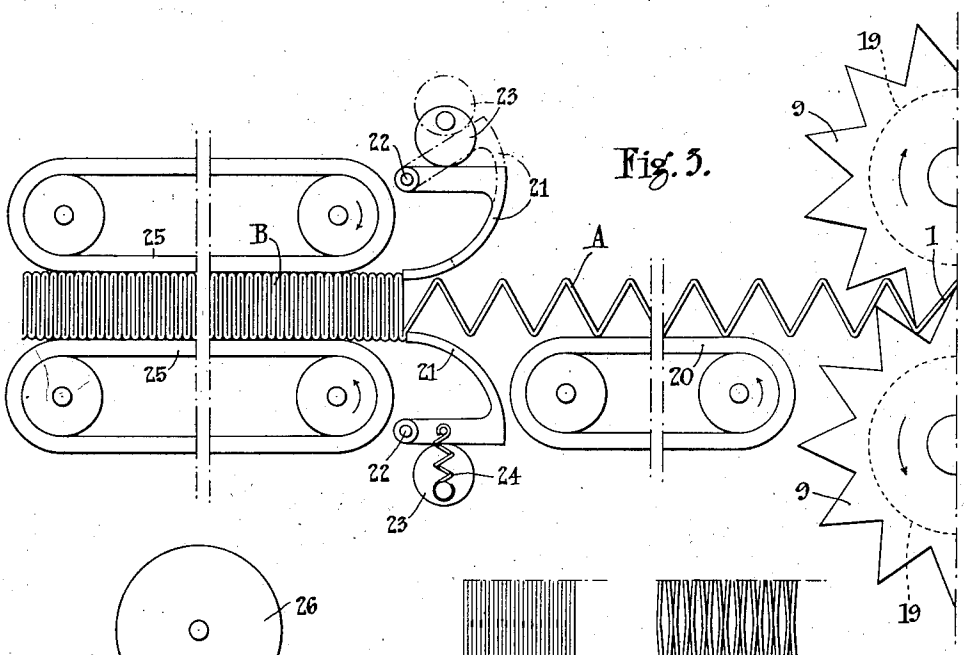

Fig. 3.

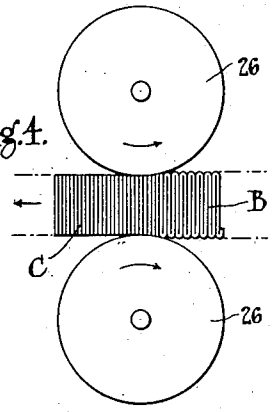

Fig. 4.

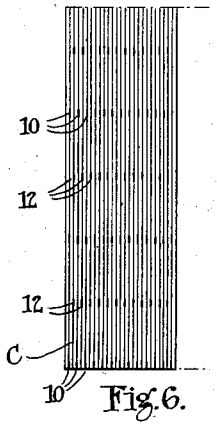

Fig. 6.

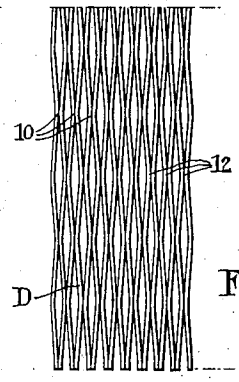

Fig. 7.

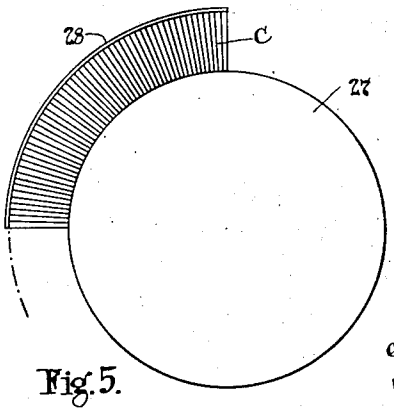

Fig. 5.

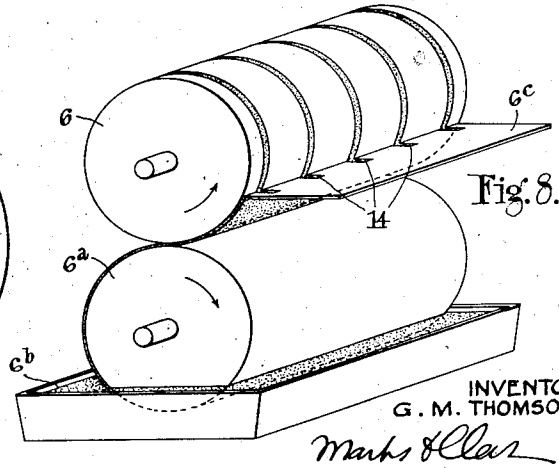

Fig. 8.

INVENTOR
G. M. THOMSON.

Marks & Clerk

BY ATTORNEYS.

Patented Aug. 29, 1933 1,924,472

UNITED STATES PATENT OFFICE

1,924,472

METHOD OF AND MEANS FOR MANUFACTURING SOUND ABSORBING MATERIAL

George Miller Thomson, Caledonia, Ontario
Canada

Application November 28, 1930
Serial No. 498,895

10 Claims. (Cl. 154—28)

This invention relates to the manufacture of sound absorbing material and has for its object to provide an improved method of manufacturing a sound absorbing tile or panel for application to the interior surfaces of rooms or other enclosures having objectionable acoustical characteristics.

In copending application No. 498,896, applicant has described a sound absorbing material having a multiplicity of narrow wedge-shaped cells, and the present invention provides an advantageous method of manufacturing such a product.

According to the present invention the sound absorbing material is produced by applying adhesive to staggered spaced points on opposite sides of flexible material, such as asbestos paper, and then producing a stack of such strips and allowing the adhesive to dry. The resulting product can be readily expanded to any desired degree to produce any predetermined width of cell opening, by bending the material to a suitable curvature, applying adhesive to the concave face of the curved material, then applying a backing to the curved face, and then flattening the material.

A convenient method of continuously manufacturing the sound absorbing material will now be described.

Referring now to the accompanying drawings, which illustrate, by way of example, one convenient embodiment of the invention,

Figure 1 is a diagrammatic side elevation of part of the improved apparatus,

Figure 2 is a plan view on the line 2—2 of Figure 1,

Figure 3 is a side elevation of another part of the apparatus on a larger scale,

Figures 4 and 5 are side elevations illustrating subsequent steps in the improved method of manufacturing sound absorbing material.

Figures 6 and 7 are plan views of the sound absorbing material produced by the method illustrated in the other figures, the material being shown contracted in Figure 6 and expanded in Figure 7, and

Figure 8 is a diagrammatic perspective view of the adhesive-applying means shown in Figures 1 and 2.

According to the ilustrated form of the invention, a web of suitable flexible material 1, preferably asbestos paper, advances from a supply roll 1*a* and passes successively over a guide roll 2, an adhesive-applying roll 3, guide rolls 4, guide roll 5, an adhesive-applying roll 6, guide roll 7, drive rolls 8 and between crimping rolls 9.

The roll 3 is arranged to apply parallel lines or bands of adhesive 10 to the surface 11 of the web of paper 1, while roll 6 is arranged to apply parallel lines of adhesive 12 to the surface 13 of the paper 1, the adhesive lines 12 being disposed midway between the lines 10 as shown in Figure 2. This is preferably accomplished by providing distributing rolls 3*a* and 6*a* beneath the rolls 3 and 6 respectively. The rolls 3*a* and 6*a* dip into adhesive containers 3*b* and 6*b* and the pairs of rolls 3, 3*a* and 6, 6*a* are rotated by a suitable means, not shown, in the direction of the arrows in Figure 1. The rolls 3 and 6 are provided with scrapers 3*c* and 6*c* formed with notches 14 in their scraping edges, as indicated in Figure 8, the spacing and width of the notches being determined according to the desired spacing and width of the lines of adhesive 10 and 12. The liquid adhesive is carried up by rolls 3*a* and 6*a* and is transferred to the rolls 3 and 6, the thickness of the adhesive films transferred to the rolls 3 and 6 being adjustable by varying the distance between the rolls. For example, the axles of the rolls 3 and 6 may be journalled in block 15, supported upon springs 16 in slots in side frames, such as 17. The spacing of the rolls 3 and 3*a*, and 6 and 6*a*, may be adjusted to obtain the desired thickness of adhesive by means of screws 18.

The adhesive which passes through the slots 14 of scrapers 3*c* and 6*c* is applied to the surfaces 11 and 13, respectively, of the paper web 1, and the guide rolls 5 and 7, the drive rolls 8 and crimping rolls 9 are formed with annular grooves 19 so as to avoid disturbance of the adhesive lines 10 and 12.

The crimping rolls 9 fold or bend the web 1 into a zigzag formation, as indicated at A, and at this stage may be supported by any suitable means such as an endless belt 20.

The crimped paper A is then manipulated to close up the folds thereof into the form indicated at B, in which form the paper will be held as soon as the adhesive lines 10 and 12 dry. This operation may be performed by the means indicated in Figure 3. Arcuate fingers 21 are caused to oscillate about pivots 22 by means of rotating cams 23, against which the fingers are held yieldingly in contact by any suitable springs, one of which is indicated at 24. The fingers rapidly oscillate from the position shown in full lines in Figure 3 to the position shown in dotted lines, and thereby feed the folds of the crimped material A between two endless belts 25, which advance slowly and hold the closed material in the

form shown at B until the adhesive has had time to dry.

The bends which connect the flat portions of the material B and which form the top and bottom surfaces thereof, are then removed by grinding or otherwise. This operation is illustrated in Figure 4. The material B is fed between two suitably spaced grinding wheels 26, which grind off the upper and lower surfaces of the material B and thus produce a material indicated at C, which consists of a stack of rectangular strips of paper connected to one another at staggered points on opposite sides of each strip. A portion of the material C is shown in Figure 6 in which the lines of connection on one side of each strip are shown at 10 and on the opposite side of each strip at 12.

The material C is next expanded to form the material indicated at D in Figure 7, the degree of expansion being determined in accordance with the characteristics of the sound waves to be absorbed, as referred to more particularly in applicant's copending application No. 498,896. The expansion is preferably effected by the method illustrated in Figure 5. The contracted material C is placed on a cylindrical member 27 with the paper strips extending parallel to the axis of the cylinder, so that the strips will tend to assume a radial position with respect to the axis of the cylinder. The outer face of the material C is thus caused to assume the expanded condition illustrated (to an exaggerated extent) in Figure 7. Adhesive is then applied to the outer edges forming the curved outer face of the material C and a backing of flexible but inextensible material 28, such as paper, is applied. The backing 28 need not extend entirely over the face of the material, but may consist of, say, three strips of paper, one along each edge of the material and another at the middle thereof. As soon as the adhesive has dried the material is removed from the cylinder 27 and flattened and the front face of the material then automatically assumes the same expanded condition as the back face. Thus, by selecting a suitable diameter of cylinder 27, in relation to the thickness of the material C, any desired degree of expansion can be readily effected and permanently fixed by applying the backing 28.

Many modifications within the scope of the appended claims may be made without departing from the invention.

What I claim is:

1. A method of making sound absorbing material which comprises applying adhesive at staggered spaced points on opposite sides of flexible material, producing a stack of rectangular strips of the flexible material with the adhesive thus applied thereto, allowing the adhesive to dry, then expanding the resulting material to a definite predetermined extent, and securing said material in said definite expanded condition.

2. A method of making sound absorbing material which comprises applying adhesive at staggered spaced points on opposite sides of flexible material, crimping said material transversely, closing the folds of said crimped material upon one another, removing the outer surfaces of said closed, crimped material, allowing the adhesive to dry, then expanding the resulting material to a definite predetermined extent, and applying an inextensible backing to one side of the expanded material.

3. A method of making sound absorbing material which comprises applying adhesive at staggered spaced points on opposite sides of flexible material, producing a stack of rectangular strips of the flexible material with the adhesive thus applied thereto, allowing the adhesive to dry, then expanding the resulting material by bending said resulting material over a cylindrical surface of predetermined radius, applying a backing of flexible inextensible material to the outer face of the bent material, and then flattening the backed material.

4. A method of making sound absorbing material which comprises continuously advancing a web of flexible sheet material, applying spaced, parallel lines of liquid adhesive to one surface of said web, applying similar spaced parallel lines of liquid adhesive to the other surface of said web in staggered relation to the first mentioned lines of adhesive, crimping the web laterally into a zigzag formation, closing the folds of said crimped web upon one another and holding the folds in closed condition until the lines of adhesive dry, then removing the outer surfaces of said closed, crimped material, and expanding the resulting material to a definite, predetermined extent.

5. A method of making sound absorbing material which comprises continuously applying parallel lines of liquid adhesive to opposite sides of a web of flexible material, the adhesive lines on one side being staggered with respect to those on the other side, crimping the flexible material, closing the folds of the crimped material, allowing the adhesive lines to dry, grinding off the outer faces of the closed crimped material, expanding the resulting product to a definite, predetermined extent, and securing said material in said definite expanded condition.

6. A method as claimed in claim 5, wherein the closed, crimped material is then expanded to form a multiplicity of double-wedge-shaped cells by bending the closed crimped material to a curvature of predetermined radius, applying a flexible, inextensible backing to the convex face of the material and then flattening the backed material to cause the previously concave face to be expanded to the same extent as the previously convex face.

7. A method as claimed in claim 5, wherein the adhesive is applied by supplying liquid adhesive to a roll engaged by the flexible material, scraping from the roll all except spaced lines of adhesive, and rotating the roll to move said lines of adhesive continuously into contact with said flexible material.

8. A method as claimed in claim 5, wherein the adhesive is applied to the flexible material by continuously rotating a supply roll partially immersed in liquid adhesive, rotating a distributing roll engaged by the flexible material and said supply roll, so that adhesive is continuously transferred from said supply roll to said distributing roll, removing from the distributing roll all except spaced lines of adhesive, and adjusting the thickness of the transferred film of adhesive by moving the distributing roll towards or away from the supply roll.

9. Apparatus for making sound absorbing material comprising means for applying staggered spaced lines of adhesive to the opposite sides of flexible sheet material, means for then forming a stack of strips of the flexible material, means for expanding the resulting material to a definite, predetermined extent and means for securing said material in said definite expanded condition.

10. Apparatus for making sound absorbing material comprising means for continuously applying staggered spaced lines of adhesive to the opposite sides of a web of flexible sheet material, means for continuously advancing said web, means for crimping said web laterally, means for closing the folds of said crimped material on to one another, means for maintaining the folds of said crimped material in closed condition until the adhesive has dried, means for grinding off the outer faces of said closed crimped material, means for expanding the resulting material to a definite, predetermined extent and means for securing said material in said definite expanded condition.

GEORGE MILLER THOMSON.