Oct. 2, 1923. 1,469,515

W. M. KELLY

PRINTING PRESS

Filed Aug. 6, 1921 5 Sheets-Sheet 1

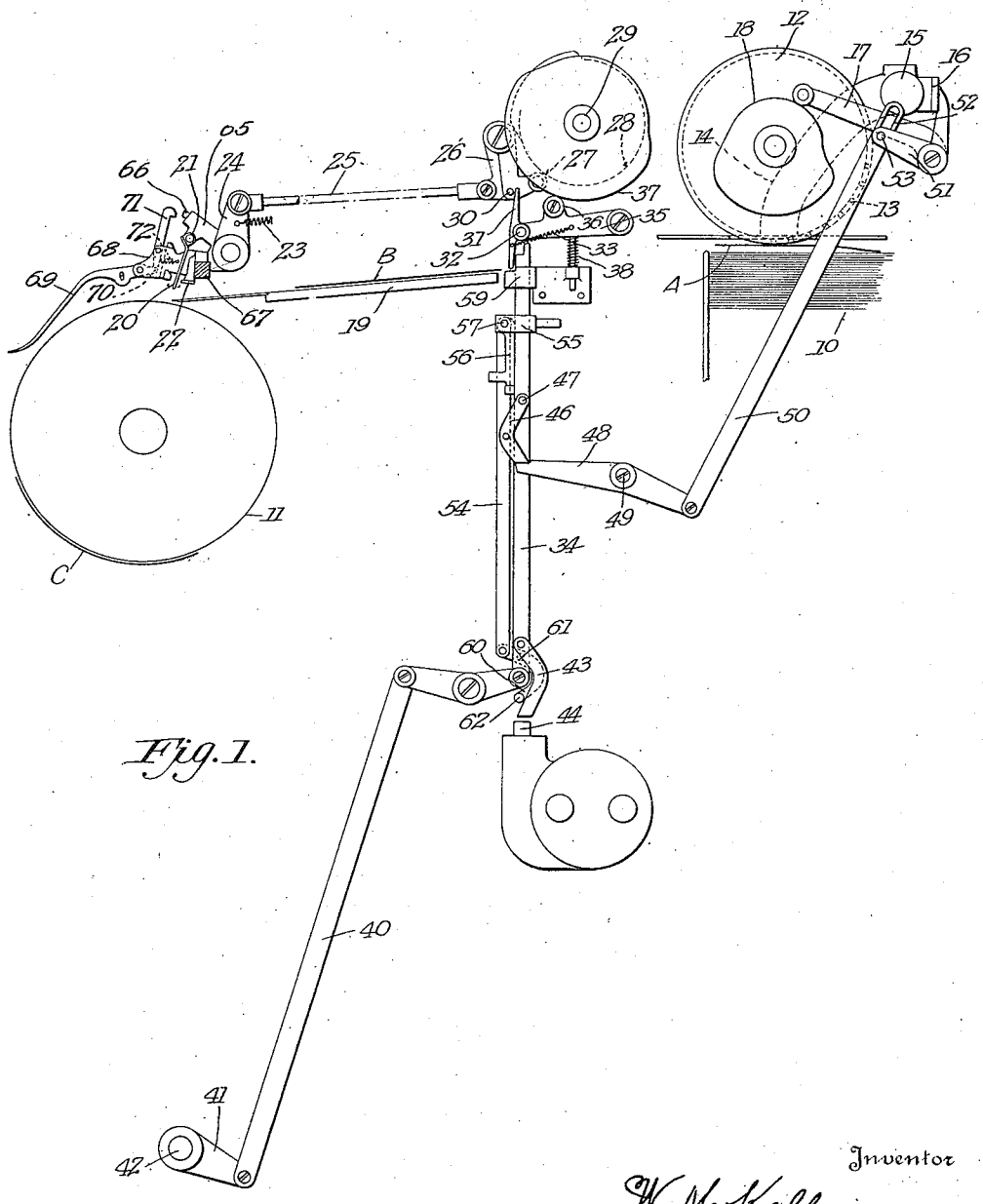

Fig. 1.

Inventor

W. M. Kelly,

By Watson, Coit, Moore & Grindle

Attorney

Oct. 2, 1923. 1,469,515

W. M. KELLY

PRINTING PRESS

Filed Aug. 6, 1921 5 Sheets-Sheet 2

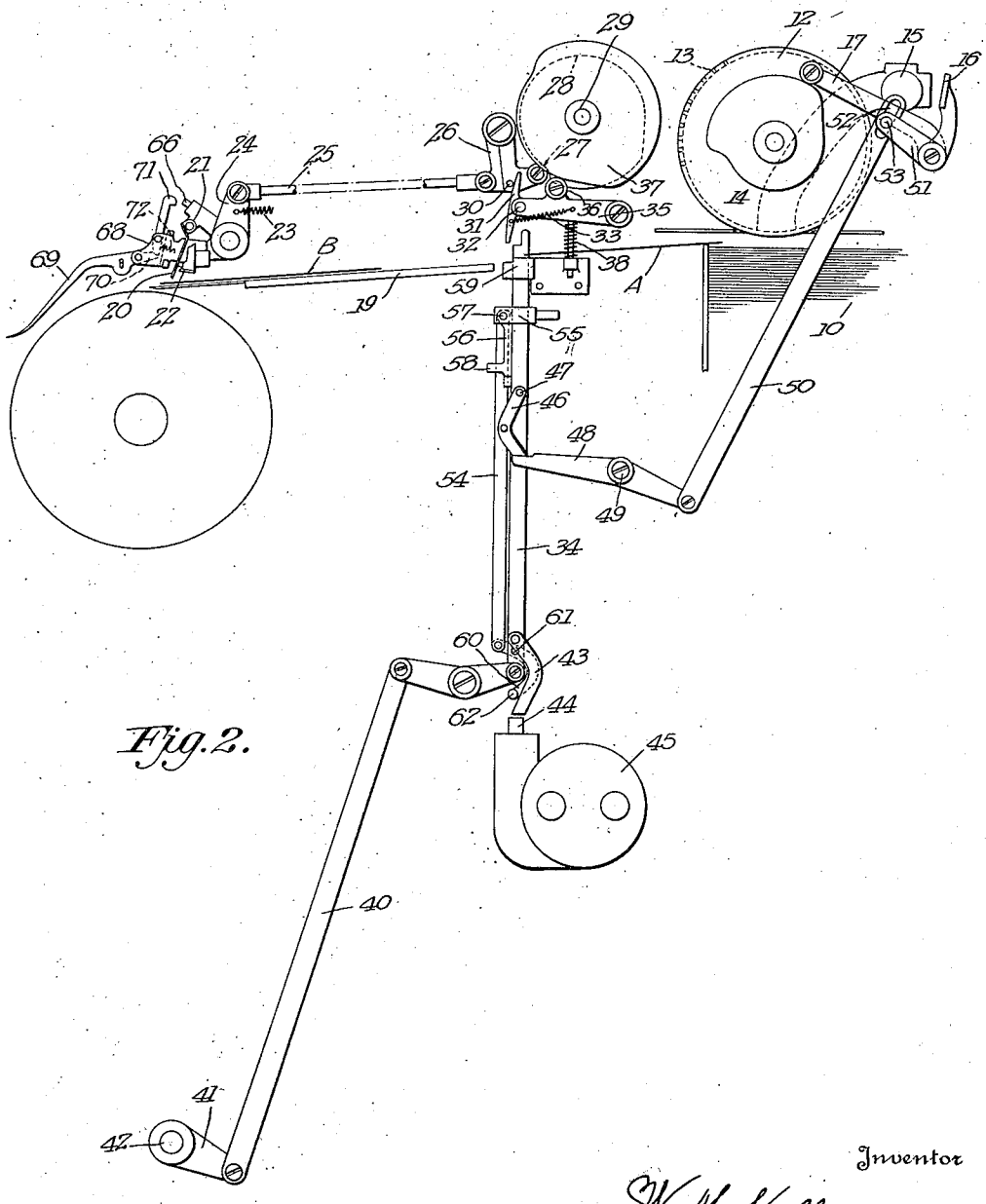

Fig. 2.

Inventor

W. M. Kelly,

By Watson, Cox, Morse & Brindle,

Attorney

Oct. 2, 1923.

1,469,515

W. M. KELLY

PRINTING PRESS

Filed Aug. 6, 1921

5 Sheets-Sheet 3

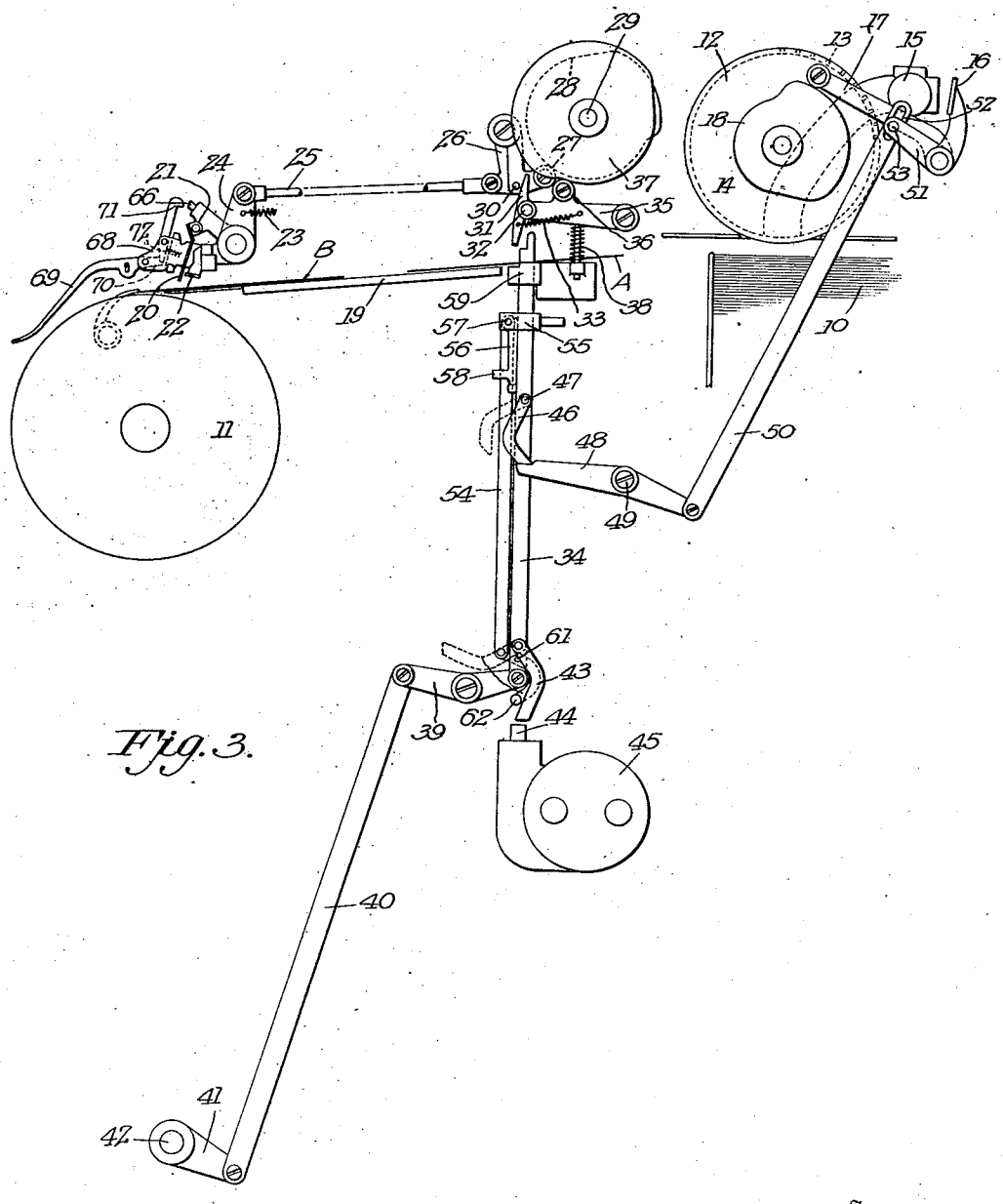

Fig. 3.

Inventor

W. M. Kelly,

By Watson, Cole, Morse & Grindle

Attorney

Oct. 2, 1923. **1,469,515**

W. M. KELLY

PRINTING PRESS

Filed Aug. 6, 1921 5 Sheets-Sheet 4

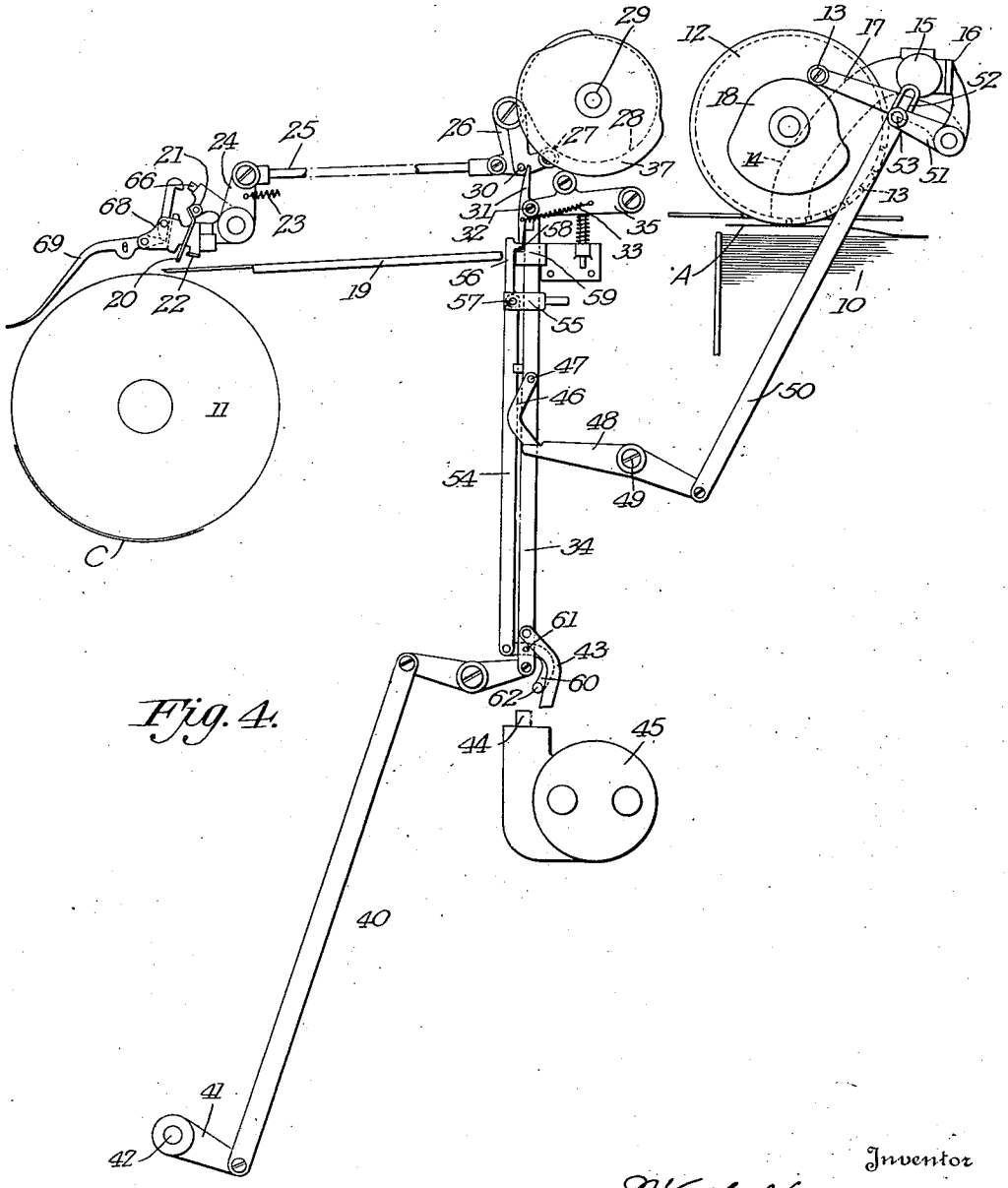

Fig. 4.

Inventor

W. M. Kelly,

By Watson, Cole, Morse & Grindle,

Attorney

Oct. 2, 1923. 1,469,515

W. M. KELLY

PRINTING PRESS

Filed Aug. 6, 1921 5 Sheets-Sheet 5

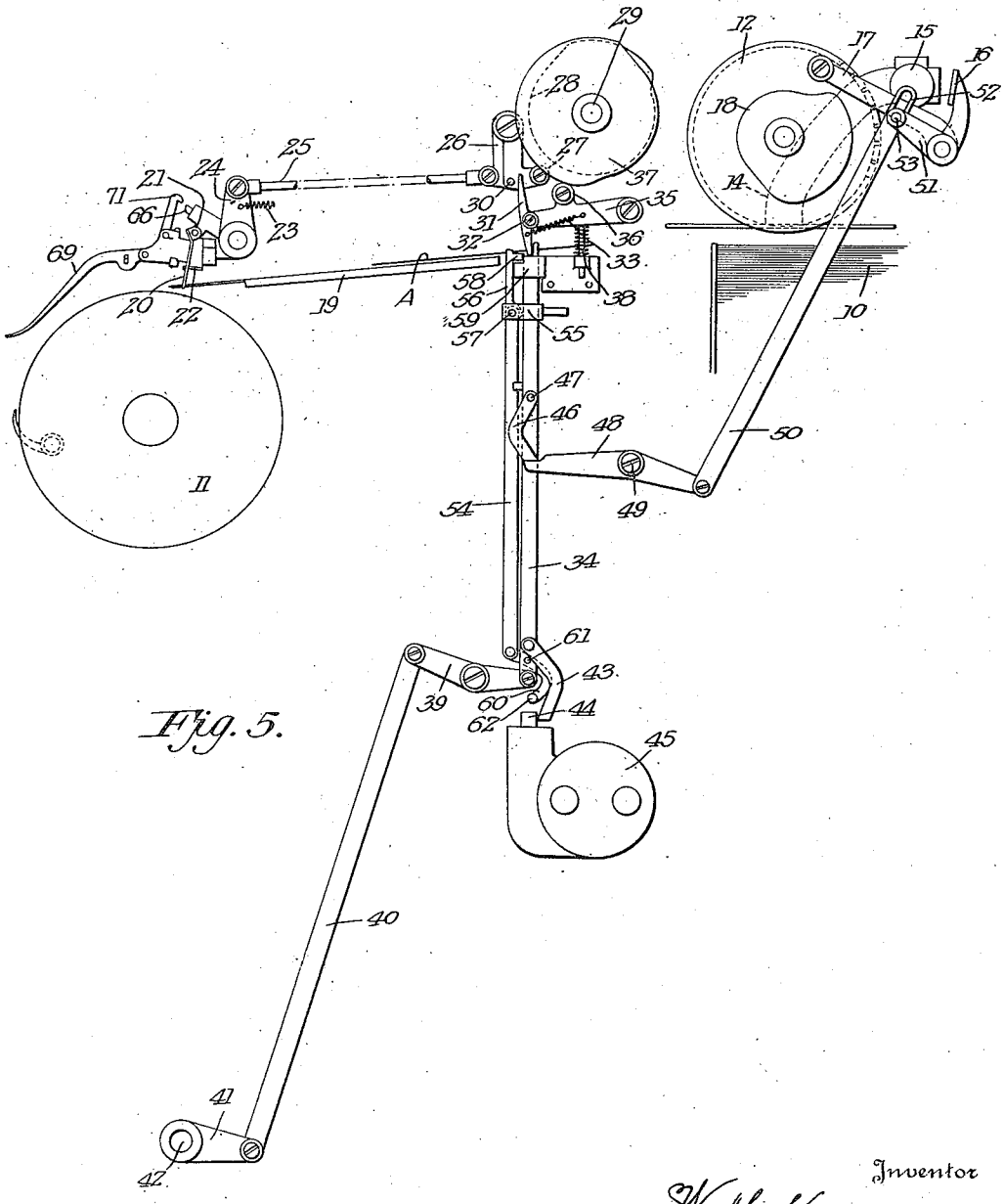

Fig. 5.

Inventor

W. M. Kelly,

By Watson, Cole, Moorse & Grindle,

Attorneys

Patented Oct. 2, 1923. 1,469,515

UNITED STATES PATENT OFFICE.

WILLIAM M. KELLY, OF JERSEY CITY, NEW JERSEY.

PRINTING PRESS.

Application filed August 6, 1921. Serial No. 490,291.

To all whom it may concern:

Be it known that I, WILLIAM M. KELLY, a citizen of the United States, and resident of Jersey City, Hudson County, State of New Jersey, have invented certain new and useful Improvements in Printing Presses, of which the following is a specification.

The present invention relates to printing presses and more particularly to the means for controlling the sheet feeding mechanism the stopping of the press and the throwing on and off of the impression.

The principal objects of the invention are—

1. To provide means so that periodically a sheet feeding operation of the mechanism may be avoided.

2. To provide a sheet feeding mechanism which may be thrown from single to double rolling while the mechanism is in operation.

3. To provide a sheet feeding mechanism in which the avoiding of sheet forwarding operations is controlled by the absence of a sheet on the feed board.

4. In a sheet feeding mechanism having means to stop the mechanism when a sheet is absent on the feed board when due, means to render the stopping means inoperative when the mechanism is double rolling, in timed relation with the avoided sheet forwarding operation.

5. In a printing press, printing mechanism, means to render the printing mechanism inoperative if a sheet is not present on the feed board when due, and means actuated by the last mentioned means to cause the sheet feeding mechanism to avoid a forwarding operation.

6. In a sheet feeding mechanism, having means to stop the mechanism if a sheet is not present on the feed board when due, means actuated by the first mentioned means to cause the sheet forwarding means to avoid a forwarding operation.

7. An improved sheet detector and crumpled sheet detector.

Other objects and features of novelty will be apparent from the description taken in connection with the drawings, in which—

Figure 1 is a more or less diagrammatic view showing in side elevation one embodiment of the present invention, the parts being shown in the positions which they occupy in the normal operation of the press, that is single rolling, a sheet just being forwarded from the top of the pile;

Figure 2 is a similar view showing a sheet just after it has tripped the detectors and they have gone to the high position;

Figure 3 is a similar view showing the sheet at the time it is seized by the cylinder gripper fingers;

Figure 4 is another diagrammatic view illustrating the arrangement of the parts when the mechanism is double rolling or in other words, when the sheet forwarding means is periodically avoiding a forwarding operation, and

Figure 5 is another view showing the parts in double rolling position.

Referring to the drawings the numeral 10 indicates a pile of sheets which is to be fed one by one to the cylinder 11 of the press. The means for doing this illustrated in the drawings is pneumatic and comprises a pair of rotating wheels 12 having a series of radial holes 13 in their rims and a mouth piece 14 in communication with a suction pipe 15. The wheels 12 are rotated in any suitable manner so that the apertures 13 are carried by the nozzle or mouth piece 14 whereupon the suction causes the forwarding of the top sheet of the pile. When not feeding a sheet the suction in pipe 15 may be broken by placing the pipe in communication with the atmosphere. For this purpose a valve 16 is provided and is periodically opened through the instrumentality of lever 17 actuated by cam 18 rotating at the same speed as the suction wheels 12. The details of the foregoing feeding means are fully described in my copending application Serial Number 413,893 filed September 30, 1920.

In this manner the sheet is forwarded to a feed board indicated at 19. As the sheet approaches the cylinder 11 it swings the detector 20 to the left as viewed in Fig. 1 about the pivot 21, thus freeing the detector from the stationary stop or shoulder 22 and permitting spring 23 to swing the detector arm 24 and associated parts to the right as viewed in Fig. 1. Arm 24 is connected by link 25 with a pivoted arm 26 having a roller 27 cooperating with a cam 28 on a shaft 29. The cam is shaped and so timed that the spring 23 is permitted to raise the detector just after a sheet is due at the detector. If a sheet does not knock the detector 20 to the left as viewed in Fig. 1, the shoulder or stop 22 will engage an aperture in the detector to lock the same so that spring 23 can

not swing arm 24 and hence roller 27 will be held out of engagement with the low part of the cam.

Means is provided whereby if a sheet is not received on the feed board when due the printing mechanism, that is to say in the present instance, the means for raising and lowering the cylinder will be thrown out of operation. If desired means may also be provided so that the press will be stopped under these conditions. In the present instance under the said conditions means is provided so that the valve 16 is held open to prevent forwarding sheets from the pile. All of the above mentioned means are controlled by the detector 20. If a sheet on the feed board strikes the detector when due the rod 25 moves toward the right as viewed in Fig. 1 and pin 30 strikes the dog 31 thereby turning the same on its pivot 32 so that it fails to operate the impression throw-off, the press stopping means or the valve 16.

On the other hand if a sheet is not present on the feed board when due the detector will not be turned to the left and finger 31 will not be pushed into the position indicated in Fig. 1. On the contrary it will hold its normal position as shown in Fig. 5 the spring 33 turning it on its pivot so that its lower end normally rests on the top of the rod 34. The dog 31 is carried at the free end of a lever 35 having a roller 36 cooperating with cam 37 secured to shaft 29. A spring 38 forces lever 35 in the direction to hold the roller in contact with the cam. With the dog 31 in the position shown in Fig. 5, it will transmit movement from the cam to the rod 34 thereby depressing the latter. This rod at its lower end is connected to one end of the lever 39 the other end by a link 40 being connected to an arm 41 on shaft 42 which controls the impression, the specific structure being shown and described in my copending application Serial No. 490,290 filed August 6, 1921. Hence when the sheet is absent from the feed board when due, the means for throwing on and off the impression will be thrown out of operation.

The rod 34 adjacent its lower end also has a stop switch pawl 43, normally positioned so that its lower end is directly over the plunger 44 of the start and stop switch 45. Downward movement of the rod 34 through pawl 43 depresses the plunger 44 thereby actuating the stop switch 45 and stopping the press.

The movement of the rod 34 also opens valve 16. Thus an air trip pawl 46 is pivoted at 47 to the rod 34 and at its lower end contacts with a lever 48 pivoted at 49 and connected by a link 50 to an arm 51 secured to turn with the cam actuated lever 17. The connection between the upper end of link 50 and the arm 51 consists of a slot 52 in the link and a pin 53 on the arm disposed in the slot. Normally, that is when the valve is closed, the pin 53 is at the lower end of the slot, the length of the slot being such that the valve may be opened by movement of lever 17 without restraint. On the other hand when rod 34 is depressed through the transmitting means just described the link 50 turns arm 51 and opens valve 16 thereby placing the suction means in communication with the atmosphere and rendering the sheet forwarding means inoperative.

In Fig. 1 of the drawings it will be noted that sheet A has just been taken from the pile and is being forwarded to the feed board. A previous sheet B is on the feed board and another sheet C is on the cylinder at about the position indicated. It will be noted that the detector 20 is in elevated position that the dog 31 has been knocked out of contact with the top of rod 34 and hence has been rendered inoperative to actuate any of the devices controlled thereby.

In Fig. 2 sheet C of Fig. 1 has been taken from the cylinder, sheet B has just knocked out the detector 20 and sheet A has advanced to the position shown. It will be noted that dog 31 has been turned on its pivot but has not yet been depressed by cam 37.

Fig. 3 shows sheet B seized by the cylinder gripper fingers and sheet A advancing on the feed board. The sheet detectors are still up and dog 31 is just about to be depressed.

Figs. 1 to 3 relate to single rolling or continuous feeding of the sheets from the pile. Figs 4 and 5 on the other hand relate to double rolling. Referring to Fig. 2 it will be noted that if sheet B had not struck the detector, among other things valve 16 would have been held open during the period when the sheet subsequent to A would be fed from the pile. In other words, the detector controls the forwarding of the third subsequent sheet, that is to say sheet B controls the forwarding of the sheet immediately following sheet A. This feature is of importance in connection with the double rolling.

Referring now to Fig. 4 certain adjustments must be made before the press will double roll. Disposed alongside rod 34 is a parallel rod 54 frictionally guided thereon by the collar 55. At the upper end of this rod 54 is a pivoted dog 56 which for single rolling is retracted as shown in Figs. 1, 2 and 3. For double rolling this dog is turned about its pivot 57 to the position shown in Figs. 4 and 5, forming an extension of the rod 54. At its upper end this dog 56 has a projection 58 which is adapted to contact with a fixed bracket 59 to limit its downward movement. At its lower end the rod 54 is connected to a control lever 60 pivoted as at 61 adjacent the lower end of rod 34 but between said lower end and the pivot point of pawl 43. When the rod 54 is depressed a pin

62 at the tip of control lever 60 pushes pawl 43 to the right as viewed in Fig. 4 so that if rod 34 is thereafter depressed the lower end of pawl 43 will be out of register with the switch plunger 44 and will pass down beside the same without operating the stop switch, as shown in Fig. 5.

Referring now to the operation of the mechanism when double rolling, in order to start the machine double rolling it is first necessary that it be made to miss or avoid a sheet forwarding operation. First, air trip pawl 46 and pawl 43 are moved to the dotted line positions of Fig. 3. Then the machine is set in operation and by the operator depressing the left hand end of lever 48 valve 16 is held open so that a forwarding operation of the sheet forwarding means is avoided. Immediately after the avoided sheet feeding operation, the pawls 43 and 46 are swung to their operative positions. The parts of Fig. 4 are in the same positions as Fig. 1 except that the former are arranged for double rolling while the latter are positioned for single rolling. It will be noted that sheet C is on the cylinder in both these figures and sheet A is just being forwarded from the pile. In the double rolling of Fig. 4 however, sheet B is absent because of the double rolling. The sheet C tripped the detector and moved pawl 31 so that when it was depressed by cam 37 it contacted with the projection 58 of dog 56 and depressed rod 54 thereby turning pawl 43 to an inoperative position so that it will not actuate the stop switch. Now in single rolling sheet B would strike the detector and operate the parts as described. In double rolling however there is no sheet B and consequently the detector will not be swung to the left as viewed in Figs. 4 and 5. Referring to Fig. 5 it will be noted that sheet A has advanced on the feed board. As there was no sheet B ahead of A the detector 20 is caught by stop 22 and consequently dog 31 assumes its normal position shown in Fig. 5 so that when cam 37 depresses the dog 31 the latter is in contact with the upper end of rod 34 and depresses the latter. This movement however does not stop the mechanism for the reason that pawl 43 has been moved to inoperative position as previously described. However the downward movement of rod 34 through air trip pawl 46 opens air valve 16 thereby avoiding a sheet forwarding operation. In other words the sheet which would be fed in single rolling directly after sheet A will not be forwarded. Sheet A will advance over the feed board and strike the detectors so that the parts will be moved to the position shown in Fig. 4, thus completing the cycle of movements for double rolling. From the foregoing it is seen that the forwarding means is caused to avoid alternate forwarding operations merely by making the machine miss forwarding a sheet. Thereafter it will automatically forward alternate sheets only. Furthermore, the machine may be shifted from single to double rolling or vice versa while it is in operation.

The lever 65 to which is pivoted the detector 20 has a shoulder 66 for a purpose presently to be described. The cross member 67 carries a bracket 68 on which is pivotally mounted the crumpled sheet detector 69. The tail end of this detector is formed with a shoulder 70 which holds the latch 71 cocked. A spring 72 tends to turn the latch so that, when it is tripped, it will engage the shoulder 66 and hold the lever 24 from having its normal movement in the same manner as the sheet detector 20 holds this lever when the detector engages the shoulder 22. Thus, if the detector 69 is raised by a crumpled sheet, in due course thereafter the impression means will be thrown out and the press stopped.

Having described the invention what is claimed as new and desired to be secured by Letters Patent is:

1. The combination of sheet forwarding means, an impression cylinder, means for raising and lowering said cylinder, means controlling the operation of said mechanism by the presence of a sheet in position to be taken by said cylinder and means governed by said controlling means to avoid alternate forwarding operations of said forwarding means.

2. The combination of sheet forwarding means, an impression cylinder, mechanism for raising and lowering said cylinder, means controlling the operation of said mechanism by the presence of a sheet in position to be taken by said cylinder and means governed by said controlling means to periodically avoid forwarding operations of said forwarding means.

3. The combination of sheet forwarding means, an impression cylinder, mechanism for throwing the impression on and off, means controlling the operation of said mechanism by the presence of a sheet in position to be taken by said cylinder and means governed by said controlling means to avoid alternate forwarding operations of said forwarding means.

4. The combination of sheet forwarding means, an impression cylinder, mechanism for throwing the impression on and off, means controlling the operation of said mechanism by the presence of a sheet in position to be taken by said cylinder and means governed by said controlling means to periodically avoid forwarding operations of said forwarding means.

5. The combination of sheet forwarding means, an impression cylinder, mechanism for raising and lowering said cylinder, means normally arranged to prevent the op-

eration of said mechanism, means controlled by the sheets to render said preventing means ineffective, and means controlled by said preventing means to periodically render the operation of said forwarding means ineffective.

6. In a sheet feeding mechanism, in combination, sheet forwarding means, printing mechanism, means to render said mechanism inoperative when a sheet is not delivered to said mechanism, and means operated by the means last recited to periodically render the operation of said forwarding means ineffective.

7. In a sheet forwarding device, in combination, sheet forwarding means, manually controlled mechanism to avoid a sheet forwarding operation, and means adapted to be manually adjusted to thereafter periodically render operative said mechanism.

8. The combination of sheet forwarding means, a feed board, means to cause said forwarding means to miss forwarding a sheet to the feed board, and means controlled by the absence of a sheet on the feed board to thereafter render the second recited means effective.

9. The combination of normally operative sheet forwarding means, a feed board, and means rendered operative by the absence of a sheet on the board to cause the forwarding means to miss a forwarding operation, and thereafter periodically miss a sheet forwarding operation.

10. The combination of a sheet forwarding mechanism, a feedboard, and means controlled by the presence and absence of a sheet on the feed board to render said mechanism inoperative and operative respectively.

11. A machine of the character described including in combination, a feed board, means to forward sheets to said board at regular intervals, means rendered operative by the absence of a sheet when due on the feed board to stop the machine, and means to render said stopping means inoperative at regular intervals to permit the periodic missing of a feeding operation.

12. In a machine of the character described, in combination, a feed board, means to forward sheets to said board at regular intervals, means to stop the machine rendered inoperative by the presence of a sheet on the board when due, means to avoid alternate forwarding operations of said forwarding means, and means to render said stopping means inoperative when the non-fed sheets would normally be due on the board.

13. In a machine of the character described, in combination, a feed board, means to forward sheets to said board at regular intervals, means to stop the machine rendered operative by the absence of a sheet on the board when due, means to avoid alternate forwarding operations of said forwarding means and means to render said stopping means inoperative for the said avoided alternate forwarding operations.

14. In a sheet feeding mechanism, in combination, means to forward sheets from a pile, and means to periodically avoid a forwarding operation of said forwarding means constructed and arranged to be rendered operative while the mechanism is in operation.

15. In a sheet feeding mechanism, in combination, a feed board, pneumatic means to forward sheets from a pile to said board at regular intervals, a valve controlling said pneumatic means, and means to periodically open said valve to avoid forwarding operations of said forwarding means rendered operative by the periodic absence of a sheet on the feed board.

16. In a machine of the character described, in combination, a feed board, means to forward sheets to said board at regular intervals and means to avoid alternate forwarding operations set in operation by causing the forwarding means to miss forwarding a sheet.

17. In a machine of the character described, in combination, a feed board, means to forward sheets at regular intervals to said board, means to stop the machine if a sheet is absent when due, means to periodically avoid a forwarding operation of the forwarding means, and means to render the stop means inoperative in timed relation to the period when sheets are not forwarded.

18. In a sheet feeding mechanism, in combination, a feed board, means to forward sheets to said board at regular intervals, and means controlled by the periodic absence of a sheet on the feed board to avoid a subsequent forwarding operation of the forwarding means.

19. In a printing press, in combination, a feed board, printing mechanism, means to forward sheets to said board; means to render said printing mechanism inoperative including a cam, a normally stationary member and an element for transmitting movement from the cam to the member; means to move said element to inoperative position when a sheet is present on the board when due, and means connecting said member and sheet forwarding means to render the latter inoperative when the member is moved.

20. In a printing press, in combination, a feed board, printing mechanism, means to forward sheets to said board, a normally stationary member, a cam rotating in timed relation with the cycle of movement of the press, an element normally in operative position to transmit movement from said cam to said member, means to move said element to inoperative position if a sheet is present

on the board when due, means connecting the member and sheet forwarding means to render the latter inoperative when the member is moved, and means actuated by said member to render the printing mechanism inoperative.

21. In a printing press, in combination, a feed board, printing mechanism, means to forward sheets to said board including a valve, a normally stationary member, a cam rotating in timed relation with the cycle of movements of the press, an element normally in operative position to transmit movement from said cam to said member, means to move said element to inoperative position if a sheet is present on the board when due, means connecting the member and valve to open the latter and render the sheet forwarding means inoperative when the member is moved, and means actuated by said member to render the printing mechanism inoperative.

22. In a printing press, in combination, a feed board, printing mechanism, sheet forwarding means, a normally stationary rod, a rotating cam, an element normally operative to transmit movement from the cam to the rod, a second rotating cam, a member actuated by said second cam, means for detecting the absence of a sheet on the feed board, and connected with said member so as to prevent the latter from having its normal movement if a sheet is not present on the feed board when due, means on said member to move said element to inoperative position when the member moves, and means actuated by movement of said rod to render the sheet forwarding means and printing mechanism inoperative.

23. In a printing press, in combination, a feed board, printing mechanism, a stop switch, sheet forwarding means, a normally stationary rod, means to actuate said rod if a sheet is not present on the feed board when due, and means actuated by said rod to render the sheet forwarding means and printing mechanism inoperative and to operate said switch to stop the press.

24. A printing press including in combination, a feed board, sheet forwarding means, means to periodically avoid a sheet forwarding operation, a stop switch, means to actuate said switch if a sheet is not present on the feed board when due, and means to render said switch actuating means inoperative in timed relation with the period when said sheet forwarding means avoids a sheet forwarding operation.

25. A printing press including in combination, a feed board, sheet forwarding means, means to periodically avoid a sheet forwarding operation, press stopping means, means to actuate said stopping means if a sheet is not present on the feed board when due, and means to render said stop actuating means inoperative in timed relation with the period when said sheet forwarding means avoids a sheet forwarding operation.

26. In a printing press, in combination, a feed board, sheet forwarding means, press stopping means, means to avoid alternate forwarding operations of said sheet forwarding means, a pair of members the first adapted to actuate said stopping means, and the second to render the first member inoperative to actuate the stopping means, means to actuate said first member if a sheet is not present on the board when due, said last mentioned means also arranged to actuate the second member if a sheet is present when due so that the press will not be stopped by the absence of a sheet because of the avoided sheet forwarding operation.

27. In a printing press, in combination, a feed board, sheet forwarding means, press stopping means, means to avoid alternate forwarding operations of said sheet forwarding means, a pair of members the first adapted to actuate said stopping means, and the second to render the first member inoperative to actuate the stopping means, means to actuate said first member if a sheet is not present on the board when due, said last mentioned means also arranged to actuate the second member if a sheet is present when due so that the press will not be stopped by the absence of a sheet because of the avoided sheet forwarding operation, said second member being normally inoperative and adapted to be manually adjusted for operation.

28. In a printing press, in combination, a feed board, sheet forwarding means, press stopping means, a rod having a pawl adapted to actuate said stopping means, means to actuate said rod if a sheet is not present on the board when due, a second rod slidably carried by the first having means to move the pawl out of operative position, means to avoid alternate forwarding operations of said forwarding means, and means to operate said second rod to render the pawl inoperative in timed relation to the avoided sheet forwarding operations.

29. In a printing press, in combination, a feed board, sheet forwarding means, press stopping means, a rod having a pawl adapted to actuate said stopping means, means to actuate said rod if a sheet is not present on the board when due, a second rod slidably carried by the first having means to move the pawl out of operative position, means to avoid alternate forwarding operations of said forwarding means, and means to operate said second rod to render the pawl inoperative in timed relation to the avoided sheet forwarding operations and means actuated by movement of the first rod to operate said avoiding means.

30. In a printing press, in combination, a

feed board, sheet forwarding means including a valve, press stopping means, a rod having a pawl adapted to actuate said stopping means, means to actuate said rod if a sheet is not present on the feed board when due, a second rod having means to move the pawl out of operative position, means actuated by said first rod to open said valve to avoid alternate forwarding operations of said forwarding means, and means to operate said second rod to render the pawl inoperative in timed relation to the avoided sheet forwarding operations.

31. In a sheet feeding mechanism, in combination, rotating cam means, a member actuated by said cam means, a crumbled sheet detector, a latch, and means actuated by said detector to trip said latch and prevent said member from having its normal movement.

32. In a sheet feeding mechanism, in combination, a feed board, means for forwarding sheets to said board, means to render said forwarding means inoperative, rotating cam means, a member actuated by said cam means to render said second mentioned means inoperative, a crumbled sheet detector, a latch, and means actuated by said detector to trip said latch and prevent said member from having its normal movement.

33. In sheet feeding mechanism, a feed board, means to forward sheets to said board, cam means, a member controlling the operation of said sheet feeding means and actuated by said cam means, a device to detect the absence of a sheet on the feed board when due and connected with said member to prevent the movement of said member when a sheet is absent, a crumbled sheet detector, a latch and means actuated by said crumpled sheet detector to trip said latch and prevent normal movement of said member.

34. In sheet feeding mechanism, a feed board, means to forward sheets to said board, cam means, a member controlling the operation of said sheet feeding means and actuated by said cam means, an element connected to and moved by said member, a device to detect the absence of a sheet on the board when due and adapted to hold said element against movement when a sheet is absent, a latch, a crumbled sheet detector and means actuated by said crumpled sheet detector to trip said latch and hold said element against movement.

In testimony whereof I hereunto affix my signature.

WILLIAM M. KELLY.