(12) UK Patent Application (19) GB (11) 2470963 (13) A

(43) Date of A Publication 15.12.2010

(21) Application No: 0910204.7

(22) Date of Filing: 12.06.2009

(51) INT CL:
G02F 1/01 (2006.01) *H04B 10/18* (2006.01)

(56) Documents Cited:
WO 2004/083945 A1 US 6576886 B1
US 20050162741 A1 US 20030086144 A1

(58) Field of Search:
INT CL G02F, H04B
Other: Online: EPODOC, WPI

(71) Applicant(s):
Xtera Communications, Inc.
500 W. Bethany Drive, Suite 100, Allen, Texas 75013, United States of America

(72) Inventor(s):
Steve Webb
John Ellison

(74) Agent and/or Address for Service:
Potter Clarkson LLP
Park View House, 58 The Ropewalk, NOTTINGHAM, NG1 5DD, United Kingdom

(54) Title of the Invention: **A deterministic feedforward polarization controller**
Abstract Title: **A polarisation controller**

(57) A feedforward controller for controlling the polarization state of an optical signal. The feedforward controller comprises an optical input for receiving an optical input signal having an input polarisation state, an optical output for transmitdng an optical output signal having en output polarisation state, means for sampling the optical input signal to provide one or more signals representative of the polarisation state of the optical Input signal, means for sampling the optical output signal to provide one or more signals representative of the polarisation state of the optical output signal, a signal processor coupled to the optical input and output sampling means and adapted to process the representative signals received therefrom to generate one or more control signals and a polarisation controller coupled to the optical input and the optical output The output polarisation controller comprises one or more optical elements adapted to modify the polarisation state of light passing therethrough in dependence on the one or more control signals received from the signal processor.

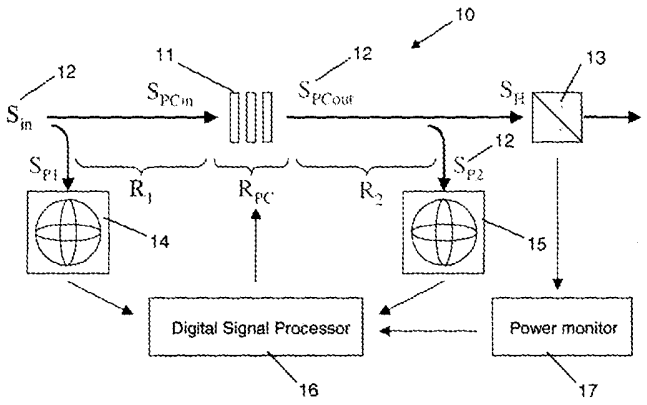

Fig. 1

GB 2470963 A

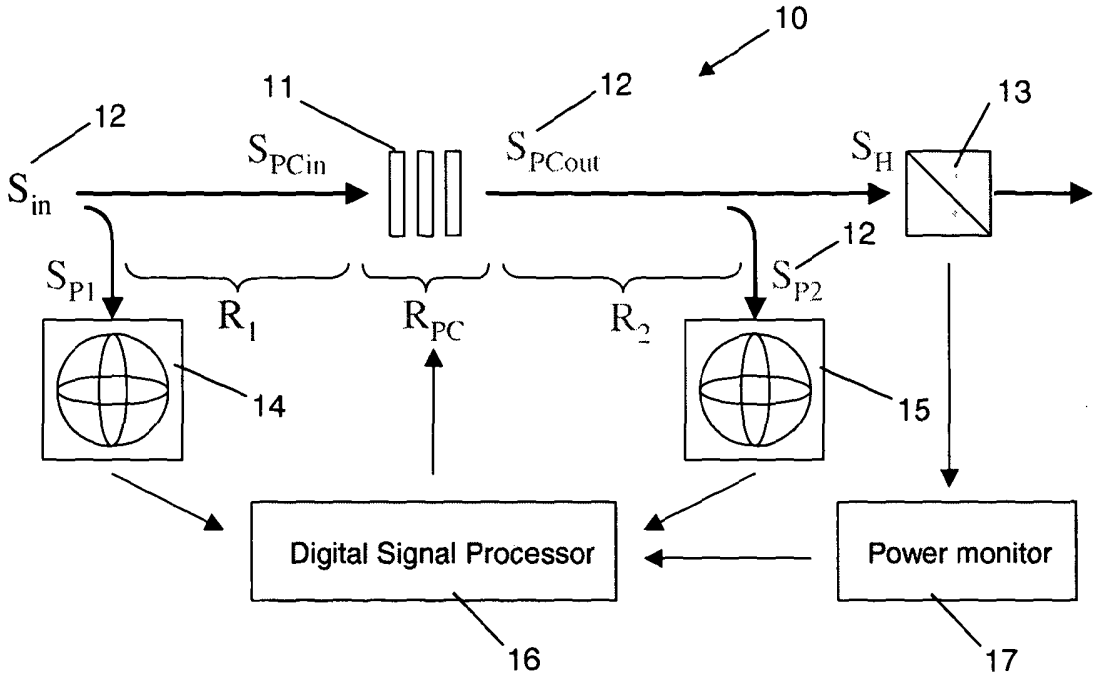
10
11
12
12
13
S_{in}
S_{PCin}
S_{PCout}
S_H
12
S_{P1}
S_{P2}
R_1
R_{PC}
R_2
14
15
Digital Signal Processor
Power monitor
16
17

Fig. 1

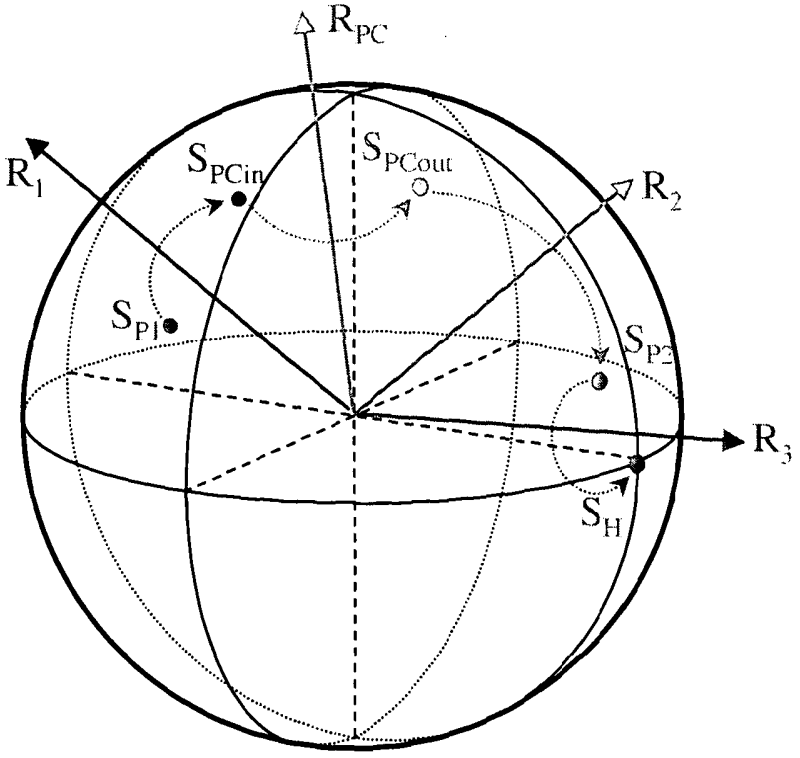

Fig. 2

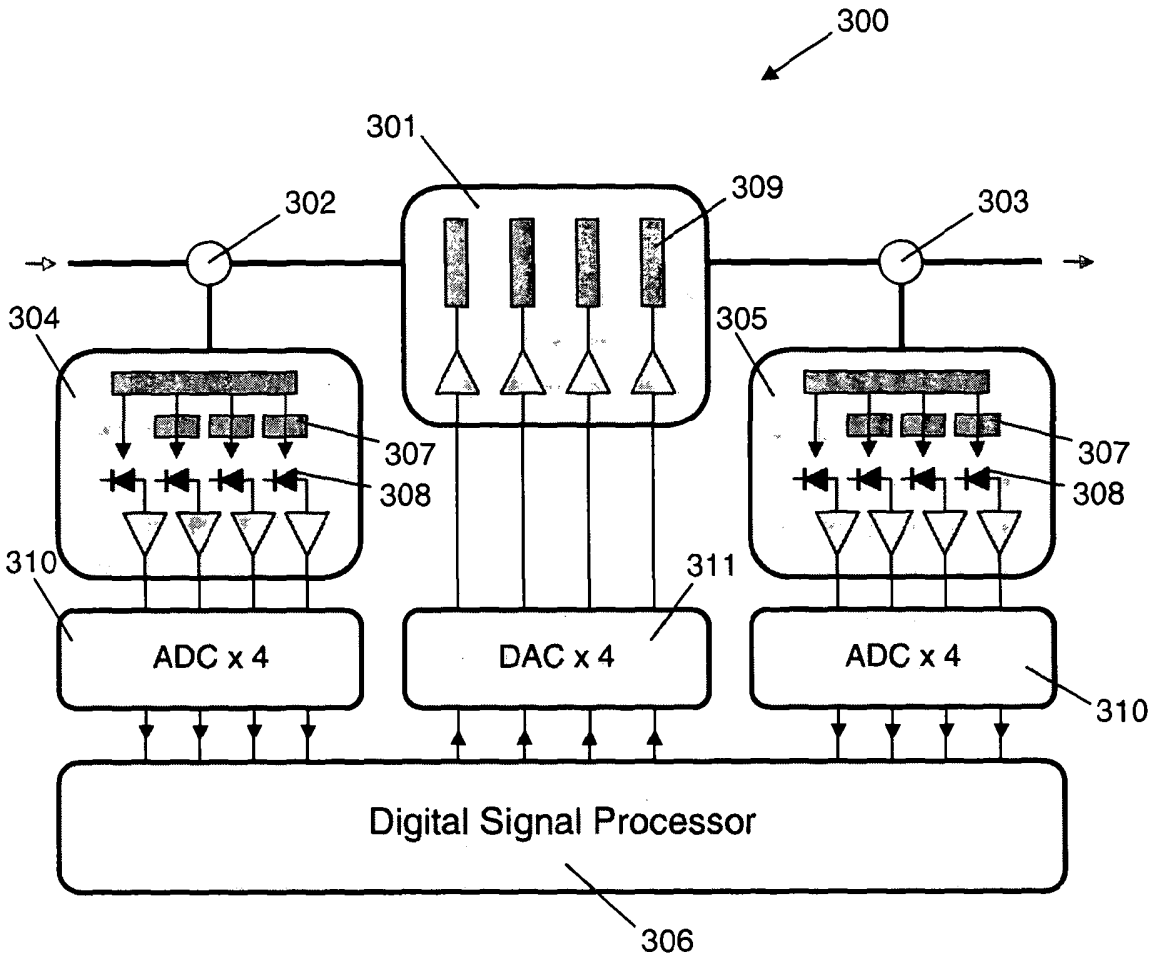
300
301
302
303
304
305
307
308
309
310
311
ADC x 4
DAC x 4
ADC x 4
Digital Signal Processor
306

Fig. 3

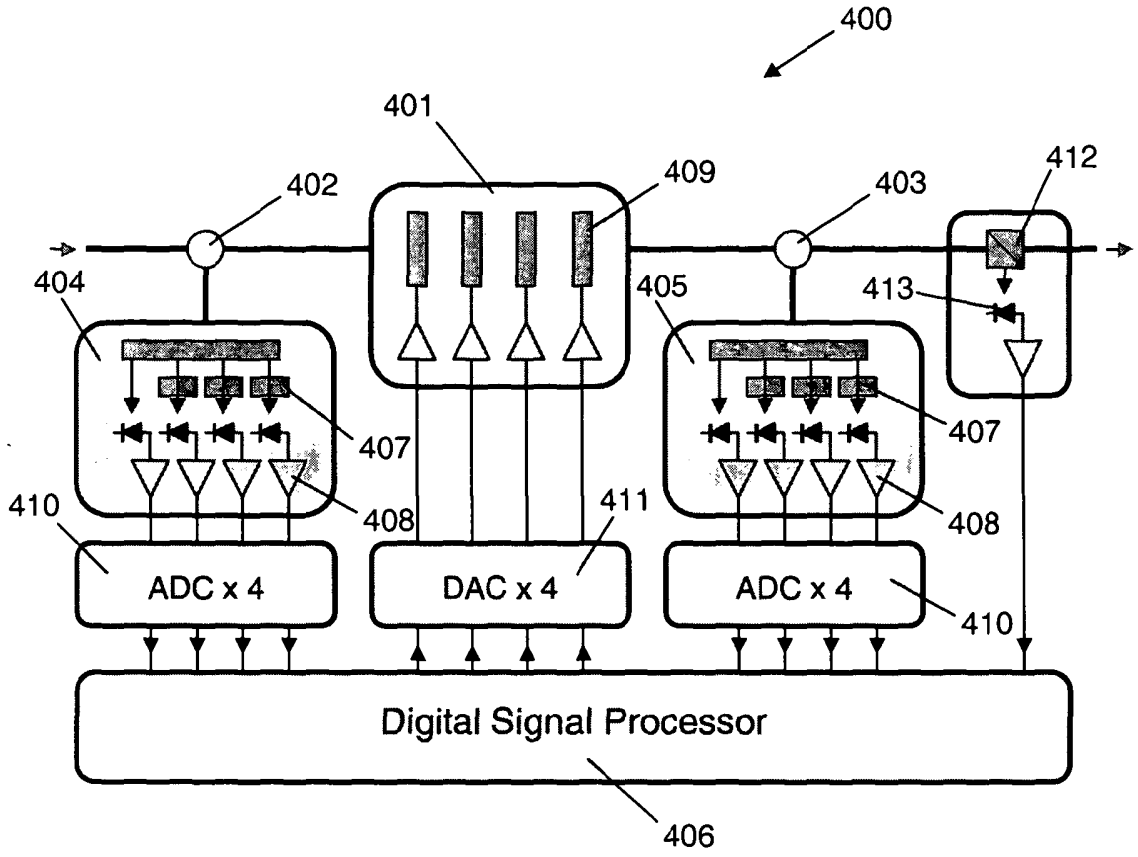
400
401
402
409
403
412
404
405
413
407
407
410
408
411
408
ADC x 4
DAC x 4
ADC x 4
410
Digital Signal Processor
406

Fig. 4

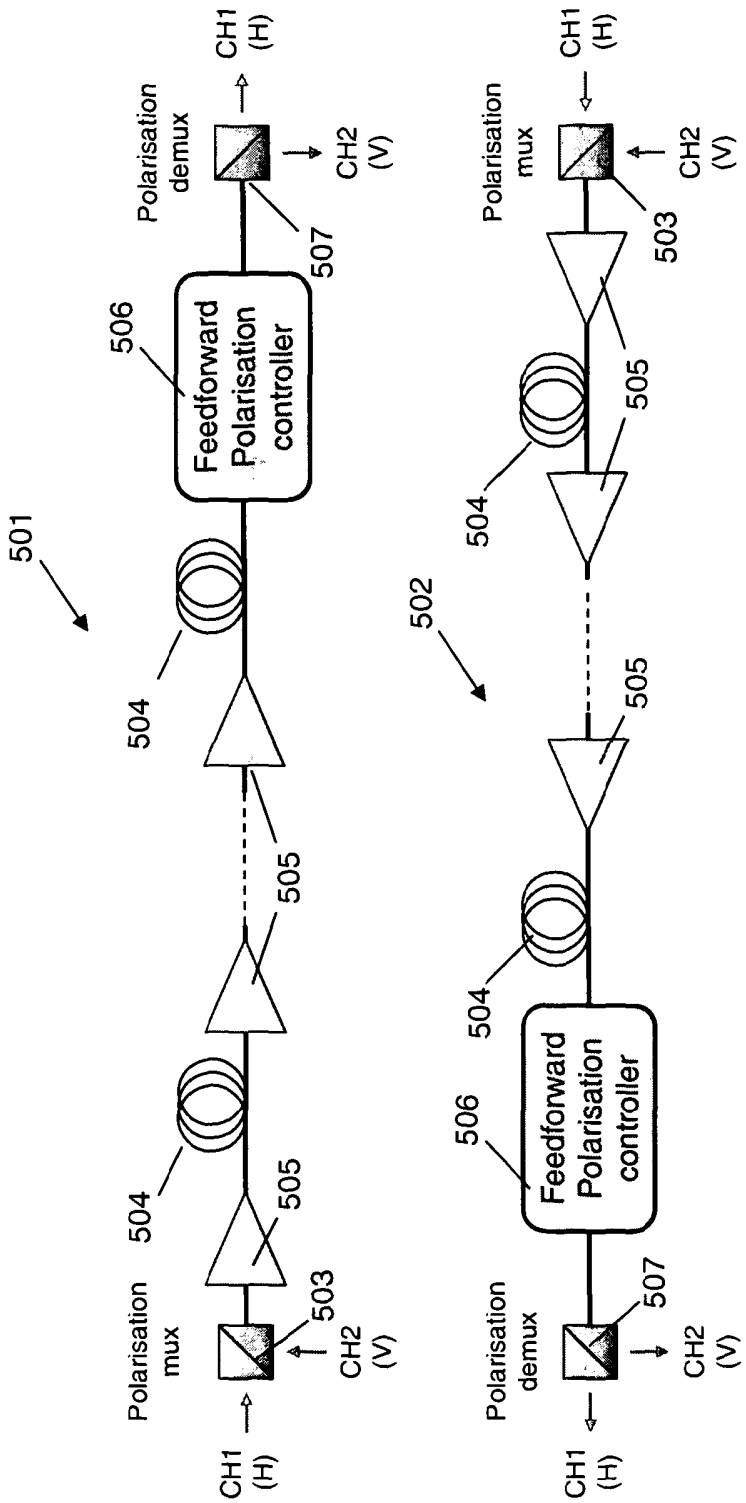
501
502
Polarisation mux
Polarisation demux
CH1 (H)
CH2 (V)
503
504
505
506
507
Feedforward Polarisation controller

Fig. 5

A Polarisation Controller

Field of the Invention

The present invention relates to the control of the polarisation state of light propagating in an optical system, and in particular to a deterministic feedforward polarisation controller.

Background to the Invention

A common requirement in optical systems is the ability to control or stabilize the polarisation state of light in an optical fibre. An example of this application would be the field of coherent optical communication systems, in which a local oscillator laser is mixed with the incoming signal light. The resulting difference signal carrying the information is at a maximum when the local oscillator and signal lasers are aligned in polarisation at the receiver, and complete loss of signal is possible if these two lasers are significantly misaligned.

Conventionally, the solution to controlling the polarisation state of light travelling in optical fibre is through the use of a polarisation controlling module containing a number of polarisation active elements which transform the polarisation state in specific ways depending on the applied force acting on each element. For example, a lithium niobate based controller possesses a number of stages whose birefringence may be influenced through the application of an electric field. An alternative known scheme exploits the sensitivity of high birefringence fibre to an external pressure which is generated from a piezoelectric element.

Common amongst most of these schemes is the difficulty of obtaining a precise and deterministic polarisation transformation. For instance, lithium niobate suffers from bias drift with temperature, while high birefringence fibre has a very strong sensitivity to both temperature and pressure. Even when these variables are compensated for, the polarisation controller itself will have fibre tails in order to integrate it with the other components in the system, and these tails themselves will have an unknown and variable effect on the polarisation state of light entering and exiting the device.

For these reasons conventional polarisation control relies on a feedback technique, whereby some parameter correlating to the desired output state is used in a control loop to iteratively adjust the polarisation controller for the desired transmitted output state. An example of a strong feedback parameter device would be a polariser. The output of the polariser is maximized (or minimized) through iterative and continuous adjustment of the controlling elements of the polarisation controller. The disadvantage of this technique is the lack of agility with which the system can respond to changes in the input state of polarisation. Since the polarisation transfer function of the fibre tails is unknown, every change in input polarisation state requires an iterative adjustment to the controller elements to rediscover the best configuration of the elements within the polarisation controller. This can be slow.

Summary of the Invention

According to a first aspect of the present invention there is provided a feedforward controller for controlling the polarisation state of an optical signal, the feedforward controller comprising:

an optical input for receiving an optical input signal having an input polarisation state;

an optical output for transmitting an optical output signal having an output polarisation state;

means for sampling the optical input signal to provide one or more signals representative of the polarisation state of the optical input signal;

means for sampling the optical output signal to provide one or more signals representative of the polarisation state of the optical output signal;

a signal processor coupled to the optical input and output sampling means and adapted to process the representative signals received therefrom to generate one or more control signals; and,

a polarisation controller coupled to the optical input and the optical output, the polarisation controller comprising one or more optical elements adapted to modify the polarisation state of light passing therethrough in dependence on the one or more control signals received from the signal processor.

The signal processor may be adapted to provide one or more control signals whereby the one or more optical elements of the polarisation controller modify the polarisation state of light passing therethrough to maintain an original polarisation state of the optical output signal. In this way, once a particular output polarisation state has been transmitted, the feedforward controller can dynamically react to small changes in polarisation behaviour so as to maintain that original polarisation state.

In preferred embodiments, at least one of the optical input and output sampling means comprises an optical coupler for sampling the optical signal and a polarimeter coupled to the optical coupler and adapted to provide one or more signals representative of the polarisation state of the optical signal. The optical coupler may comprise a tap coupler.

Preferably, the polarimeter comprises means to resolve one or more polarisation components of the optical signal, and one or more respective photodiodes for measuring the magnitude of the one or more polarisation components resolved. Such polarisation resolving means may comprise a combination of waveplates and/or polariser elements. In some preferred embodiments, the polarisation resolving means is able to resolve at least three polarisation components of the optical signal. The polarisation components may then define a Stokes vector for the optical signal.

In a preferred implementation, the polarisation controller comprises a plurality of waveplates, each waveplate having an electrically controllable retardance. In one embodiment the polarisation controller comprises four waveplates having their fast axes oriented at 0, +45, 0, -45 degrees, respectively, although other arrangements are possible.

Typically, the signal processor will be a digital signal processor, in which case the feedforward controller further comprises a first analog-to-digital converter for converting analog signals received from the optical input sampling means into digital signals for the digital signal processor, a second analog-to-digital converter for converting analog signals received from the optical output sampling means into digital signals for the digital signal processor, and a digital-to-analog converter for

converting digital signals from the digital signal processor into analog signals for driving the polarisation controller.

When used in a repolarising mode of operation, the feedforward controller may further comprise:

a polarising component coupled to the optical output for transmitting light of a predetermined polarisation state; and,

means to monitor at least one of an amount of light transmitted by the polarising component and an amount of light rejected by the polarising component and to generate a representative signal therefor,

wherein the monitoring means is coupled to the signal processor and the signal processor is further adapted to process the representative signal received therefrom to generate the one or more control signals for the polarisation controller, whereby the polarisation controller modifies the polarisation state of light passing therethrough such that the amount of light transmitted by the polarising component is maximised and the amount of light rejected by the polarising component is minimised.

In a preferred embodiment of the repolariser, the polarising component comprises a polarising beamsplitter and the monitoring means comprises a photodiode for monitoring the amount of light rejected by the polarising beamsplitter. In this way, the system can correct for variations in polarisation behaviour and also ensure that the final optical output beam has a defined polarisation state and contains as much of the original light energy as possible.

According to a second aspect of the present invention a feedforward controlled optical fibre system comprises:

a feedforward controller according to the first aspect;

a first optical fibre transmitting the optical input signal and coupled to the optical input sampling means and to the polarisation controller; and,

a second optical fibre transmitting the optical output signal and coupled to the polarisation controller and to the optical output sampling means.

Typically, the first and second optical fibres are optically coupled to the polarisation controller by respective fibre tails. The present invention is particularly applicable

to optical fibre based systems, which are coupled by fibre tails having unknown and difficult to quantify polarisation characteristics. The feedforward controller is able to compensate for such elements without knowing the absolute polarisation state of the optical input.

The optical fibre system may be part of an overall optical communications system, such as a polarisation multiplexing optical fibre communications system which multiplexes two or more optical signals having different polarisation states. In this case the signal processor of the feedforward controller is adapted to generate the one or more control signals for the polarisation controller, whereby the polarisation controller modifies the polarisation state of light passing therethrough such that the polarisation states of the two or more optical signals maintain their original orientations and the original data bearing signals can be recovered.

According to a third aspect of the present invention there is provided a method for controlling the polarisation state of an optical signal, the method comprising the steps of:

receiving an optical input signal at the input to an optical system which includes a polarisation controller;

generating one or more signals representative of the polarisation state of the optical input signal;

transmitting the optical input signal through the optical system;

generating one or more signals representative of the polarisation state of an optical output signal from the optical system;

processing the signals representative of the input and output polarisation states to compute a characteristic polarisation transfer function of the optical system;

generating one or more control signals for driving the polarisation controller to modify the polarisation state of light passing therethrough in dependence on the characteristic polarisation transfer function; and,

modifying the polarisation state of light passing through the polarisation controller in response to the one or more control signals.

The steps may be performed continuously in order to drive the polarisation controller so as to maintain a polarisation state of the optical output signal.

Preferably, the step of generating one or more signals representative of the polarisation state of the optical input signal comprises resolving the optical input signal into one or more components having different polarization and measuring the relative strength of these components. More preferably, the optical input signal is resolved into at least three different polarisation components. The polarisation components may define a Stokes vector for the optical signal.

In some embodiments, driving the polarisation controller comprises adjusting the optical retardation of a birefringent optical component.

When used in a repolarising application, the method may further comprise the steps of:

generating a signal representative of the magnitude of a polarisation component of the optical output signal;

processing the representative signal; and,

generating the one or more control signals for driving the polarisation controller to modify the polarisation state of light passing therethrough so as to maximise or minimise the magnitude of the polarisation component of the optical output signal.

For some applications, the polarisation controller may be driven so as to rotate the polarisation state of the output light by a predetermined angle. This is particularly useful when it is necessary to compensate for a known polarisation rotation in another part of an optical system.

Conventional polarisation tracking schemes are hindered by the use of a feedback technique which iteratively adjusts the polarisation controller to obtain the desired output polarisation state, resulting in slow convergence and response speed. The present invention addresses this problem by using a feedforward technique to compute the required configuration of the polarisation controller which will generate the desired output state, resulting in a single step convergence to the solution.

In the present invention, a polarisation controller may be controlled in a manner which significantly reduces the number of iterative steps required to achieve the desired output polarisation state. The principle is essentially a feedforward technique whereby the required configuration of the polarisation controller is computed in real time from the knowledge of a relative polarisation state at some point in the system before the controller and a relative polarisation state at some point in the system after the controller. The technique does not require absolute states of polarisation to be known, since this is impossible in a system where optical fibres are present and are hiding the actual polarisation state at the output of the controller.

In the present invention, an intelligent algorithm is employed which learns the unknown transfer functions of components in the system, such as fibre tails, and automatically compensates for the polarisation rotations produced by these tails. Over time, as the algorithm gains more accurate knowledge of the system, any input polarisation change monitored by the polarisation analyzer before the controller can be compensated for in one step, resulting in no polarisation state change at the output.

The main steps of the algorithm can be summarised as follows:

1) Accumulation of a number of pairs of input and output polarization state measurements using suitable devices, such as polarimeters. The polarisation states can be collected through natural polarisation drift in the system or by deliberate polarisation scrambling and through different settings of the polarisation controller itself.

2) Computation of the (rotation) transfer matrices characterising the behaviour of the unknown components in the system using the collected polarisation state pair measurements and the known rotation matrix of the polarisation controller for each pair of measurements. This step can be executed using any number of a variety of numerical or analytical methods, such as the Nelder Mead method.

3) Computation of the polarisation controller transfer matrix required to restore the output polarisation to the desired state, based on the transfer matrices computed at

step 2. The polarization controller elements are then set to achieve this required transfer matrix.

The feedforward controller implements a slow loop which determines what the desired output state should be, for example by dithering the polarisation controller to maximise or minimise transmission through a polarisation beamsplitter.

In short the algorithm is a "learning" algorithm, which determines unknown rotation matrices in the system allowing them to be compensated for. It is also adaptive in the sense that it can track any changes in the rotation matrices which characterise system components (e.g. optical fibres), as they drift over time.

By way of an example, in the case of an optical fibre based system where the fibres are connected to the polarisation controller by fibre tails, the algorithm would consist of the following parts:

1) A learning element which discovers the fibre transfer functions of the input and output fibre tails of the polarisation controller from random input state fluctuations.

2) A feedforward element which computes the required configuration of the polarisation controller based on the polarisation states measured at some point in the system before and after the controller, and the learnt fibre transfer functions from (1) above.

3) A tracking element which continuously corrects the learnt transfer function in (1) by applying small dithers to the polarisation controller.

As indicated above, the learning process can be speeded up by employing a scrambler located before the polarisation controller to deliberately explore a number of polarisation states.

As will be appreciated by those skilled in the art, the present invention provides a powerful technique for controlling the polarisation state of optical signals in systems, which include components having unknown polarisation characteristics. Moreover, it is possible to dynamically compensate for polarisation changes at the

same time, and the learning algorithm can be employed with a wide range of polarisation controllers. The invention has wide application, and is particularly useful in optical fibre communication systems.

Brief Description of the Drawings

Examples of the present invention will now be described in detail with reference to the accompanying drawings, in which:

Figure 1 shows a feedforward polarisation control system of the present invention;

Figure 2 illustrates the interrelationships between the polarisation state vectors and transformation matrices on a Poincare sphere diagram;

Figure 3 shows a feedforward polarisation stabiliser employing a polarisation control system of the present invention;

Figure 4 shows a repolariser employing a polarisation control system of the present invention; and,

Figure 5 shows a polarisation multiplexed optical fibre communication system employing a polarisation control system of the present invention.

Detailed Description

Figure 1 illustrates the present invention in the context of a "repolarising" mode of operation. The figure shows primary elements of a feedforward polarisation controller 10 according to the present invention, which is based around a polarisation controller device 11. Also indicated in Figure 1 is the polarisation state 12 of the light signal at various points in the system. The standard textbook "Optics" by E Hecht, (Addison Wesley, 2002) describes how the polarisation states of light may be represented mathematically. In particular, polarisation states may be represented by three element Stokes vectors (**S**) and polarisation transformations are represented by 3 x 3 Mueller matrices (**R**), as follows:

$$\mathbf{S} = \begin{bmatrix} s_1 \\ s_2 \\ s_3 \end{bmatrix}, \quad \mathbf{R} = \begin{bmatrix} r_{11} & r_{12} & r_{13} \\ r_{21} & r_{22} & r_{23} \\ r_{31} & r_{32} & r_{33} \end{bmatrix} \tag{1}$$

The input light, having a state of polarisation $\mathbf{S}_{in}$, undergoes a polarisation transformation on passing through optical components, for example an input fibre tail (not shown), before impinging on the polarisation controller (PC). The PC, consisting in this case of three waveplates, transforms the polarisation state at its

input, $\mathbf{S}_{PCin}$, to the state $\mathbf{S}_{PCout}$ at its output. This transformation is represented by the Mueller matrix $\mathbf{R}_{PC}$. The output polarisation state undergoes a further transformation on passing through other optical components, for example an output fibre tail (not shown), before impinging on the polarisation beam splitter (PBS) 13 with polarisation state $\mathbf{S}_H$. The desired system state is for the polarisation controller 11 to be configured such that there is maximum transmission through the transmit port of the PBS, i.e. $\mathbf{S}_H$ is $[1\ 0\ 0]^T$ if the PBS admits horizontally polarised light and diverts vertically polarised light.

A conventional feedback controller would achieve the desired aim by dithering the elements of the polarisation controller 11 in order to maximize transmission through the transmit port of the PBS 13, which is equivalent to minimizing transmission through the divert port of the PBS. In order to provide a mechanism to feedforward, the present invention builds on this fundamental controller by adding two polarimeters, one 14 before the PC and one 15 after, as shown in Figure 1, which provide signals to a digital signal processor 16 for processing and providing suitable control signals to the elements of the polarisation controller 11.

The first polarimeter 14 measures a polarisation state which is representative of, but not necessarily the same as, the actual polarisation state impinging on the polarisation controller 11. This measured state, $\mathbf{S}_{P1}$, is related to $\mathbf{S}_{PCin}$ by the Mueller transfer matrix, $\mathbf{R}_1$, describing the polarisation behaviour of any optical components (e.g. an optical fibre and pigtail) between the polarimeter 14 and the polarisation controller 11. The second polarimeter 15 measures a polarisation state which is representative of the polarisation state of the light exiting the polarisation controller 11, and is related to $\mathbf{S}_{PCout}$ by the Mueller transfer matrix, $\mathbf{R}_2$, characterising the polarisation behaviour of any optical components (e.g. an optical fibre and pigtail) located between the polarisation controller 11 and the second polarimeter 15. In Mueller matrix algebra we can write:

$$\mathbf{S}_{P2} = \mathbf{R}_2 \mathbf{R}_{PC} \mathbf{R}_1 \mathbf{S}_{P1} \tag{2}$$

Provided the components (e.g. optical fibre) in the system has no polarisation dependent loss, then $\mathbf{R}_1$ and $\mathbf{R}_2$ are pure rotation matrices and may be described using Rodrigues rotation matrix theory, as described in R. M. Murray, Z. Li and S. S Sastry, "A Mathematical Introduction to Robotic Manipulation", CRC Press, 1994.

In this theory, each rotation matrix is expressed in terms of a principal axis about which the rotation is performed and the rotation angle itself. The Rodrigues rotation formula for a rotation matrix $\mathbf{R}$ can be expressed as follows:

$$\mathbf{R} = \mathbf{I} + \mathbf{r}_x \sin\delta + \mathbf{r}_x^2(1 - \cos\delta) \tag{3}$$

where $\mathbf{I}$ is the identity matrix, δ is the rotation angle, and $\mathbf{r}_x$ is a skew symmetric matrix representative of a vector product operator, and is given by:

$$\mathbf{r}_x = \begin{bmatrix} 0 & -z & y \\ z & 0 & -x \\ -y & x & 0 \end{bmatrix} \tag{4}$$

with the vector $\mathbf{r} = (x, y, z)^T$ being the rotation axis. Since the axis is a unit vector, it is conveniently expressed in spherical co-ordinates according to

$$\begin{aligned} x &= \cos\phi\sin\theta \\ y &= \sin\phi\sin\theta \\ z &= \cos\theta \end{aligned} \tag{5}$$

The rotation matrix may therefore be described fully by three parameters, namely $\mathbf{R}(\delta, \theta, \phi)$. The interrelationships between the polarisation state vectors and transformation matrices described above (and indicated in Figure 1) can be conveniently illustrated on a Poincare sphere diagram, as shown in Figure 2.

The transfer matrix of the polarisation controller, $\mathbf{R}_{PC}$, is also a pure rotation matrix whose parameters may be calculated by Mueller matrix multiplication of the transfer functions of the waveplates within the polariser, and is hence computable for those types of polarisation controller where the waveplates can be set to a known retardance and/or orientation.

For example, consider the particular type of polarisation controller consisting of two quarter-waveplates (QWP1 and QWP2) and one half-waveplate (HWP), arranged in the order QWP1:HWP:QWP2, with the fast axes of the two quarter-waveplates oriented $\pi/2$ apart. If QWP(x) represents a quarter-waveplate with fast axis at angle x and HWP(y) represents a half-waveplate with fast axis at angle (y), then the retarder combination QWP(α/2):HWP(β/2):QWP(α/2+π/2) forms a polarisation converter, which is always a half-wave retarder with eigenpolarisations on the

Poincare sphere at Cartesian longitude α and latitude (β-α), as described in Martinelli, M. and Chipman, R.A., "Endless Polarisation Control Algorithm Using Adjustable Linear Retarders With Fixed Axes", Journal of Lightwave Technology, vol. 21, no. 9, September 2003, pp. 2089-2096. The rotation matrix for this polarisation converter may again be described using Rodrigue's formula, where the rotation angle in this case is π (halfwave retarder) and the rotation axis is the Cartesian latitude and longitude.

Referring back to Equation (2), we can see that there are six unknowns, namely the three unknown parameters of $\mathbf{R}_1(\delta_1, \theta_1, \phi_1)$ and the three unknown parameters of $\mathbf{R}_2(\delta_2, \theta_2, \phi_2)$. By accumulating sufficient independent measurements of $\mathbf{S}_{P1}$, $\mathbf{S}_{P2}$ and $\mathbf{R}_{PC}$, Equation (2) may be solved to obtain $\mathbf{R}_1$ and $\mathbf{R}_2$. Typically, the independent measurements will be accumulated through the natural drift of the input state of polarisation and changes in the setting of the polarisation controller. The solution may be obtained through the application of one of the appropriate common numerical methods for solving simultaneous equations. In particular, a modified Nelder Mead algorithm, such as the Dynamic Simplex method described in J C Lagarias, J A Reeds, M H Wright, and P E Wright ,"Convergence properties of the Nelder-Mead simplex method in low dimensions", SIAM Optim, Vol. 9, No.1 pp112-147, 1998, is particularly suited to the task due to its good tolerance to measurement noise and the ability to dynamically evolve the solution in the presence of new measurement data.

Having solved Equation (2) for $\mathbf{R}_1$ and $\mathbf{R}_2$, it is now possible to set the polarisation controller 11 to obtain any desired polarisation state $\mathbf{S}_{P2}$ from a given measured polarisation state $\mathbf{S}_{P1}$ by generating appropriate control signals to drive the polarisation controller 11. The required $\mathbf{R}_{PC}$, which gives the desired $\mathbf{S}_{P2}$, may be obtained from the following relations:

$$\begin{aligned} \mathbf{S}_{PCin} &= \mathbf{R}_1 \mathbf{S}_{P1} \\ \mathbf{S}_{PCout} &= \mathbf{R}_2^{-1} \mathbf{S}_{P2} \\ \mathbf{S}_{PCout} &= \mathbf{R}_{PC} \mathbf{S}_{PCin} \end{aligned} \tag{6}$$

This feedforward mechanism thus allows fast polarisation stabilization to a desired value of $\mathbf{S}_{P2}$ to be achieved in only a single iteration.

The final aspect of the feedforward polarisation controller is the method of determining the value of $\mathbf{S}_{P2}$, which is required to obtain maximum transmission through the PBS 13, i.e $\mathbf{S}_H = [1\ 0\ 0]^T$. A power monitor 17 may be used to measure the power of the light exiting the PBS through its divert port and a conventional dither loop (via the digital signal processor 16) may be employed to optimize transmission through the PBS 13 by continuous small adjustment of the elements of the polarisation controller 11. Once the transmission is optimized, the value of $\mathbf{S}_{P2}$ becomes the reference polarisation state which the feedforward polarisation controller must generate. The dither loop may be continuously and independently run in the background to compensate for any slow changes in the fibre transfer matrices and ensure that the optimum values of $\mathbf{S}_{P2}$, $\mathbf{R}_1$ and $\mathbf{R}_2$ are always available to the feedforward controller algorithm.

Figure 3 shows a feedforward polarisation stabiliser system 300 according to the present invention. The figure illustrates the composition and operation of the key components of the system shown in Figure 1, namely the input and output polarimeters, 304 and 305, the polarisation controller 301, and the digital signal processor 306. Also shown are the tap couplers, 302 and 303, on the input and output of the polarisation controller 301, which tap off a sample the optical signal at that point. Each of the two polarimeters, 304 and 305, typically comprises four photodiode detectors 308, together with a combination of waveplate and/or polariser elements 307 positioned in front of each detector 308 to resolve particular components of the input polarisation state.

The output signal from each of the four photodiodes 308 is amplified and processed to give the four Stokes parameters representing the polarisation state of the input light {S0,S1,S2,S3}. In fact, in this four component Stokes vector representation, the polarisation state of the beam is actually represented by S1, S2 and S3, since S0 represents the power of the optical beam. If the beam is perfectly polarised, then $S0^2 = S1^2 + S2^2 + S3^2$. Usually, however, the beam is partially depolarised, such that $S0^2 > S1^2 + S2^2 + S3^2$. The component S0 is of little importance, since achieving perfect alignment alters S1, S2 and S3, but not S0.

The polarisation controller 301 applies a polarisation transformation to the input light, which is equivalent to a rotation on the Poincare sphere. The transformation,

or equivalently the rotation axis and magnitude, is determined by the control voltages applied to the waveplates 309 located inside the polarisation controller 301. As shown, a typical controller might consist of four waveplates 309, each having an electrically controllable retardance, and with the fast axes of the four waveplates oriented at 0, +45, 0, -45 degrees, respectively. Such a controller has a determinable transformation matrix whereby, for a given desired rotation axis and magnitude, the required four control voltages can be mathematically determined.

The digital signal processor 306 receives the information regarding the polarisation state of the light entering and leaving the polarisation controller 301 and provides suitable control signals to the elements of the polarisation controller 301, after performing the necessary computations. Since the signals received from the polarimeter photodiodes 308 are generally analogue in nature, Analog-to-Digital converters (ADC) 310 are employed as appropriate in the interface with the digital signal processor 306. Likewise, as the control signals provided to the polarisation controller 301 for controlling the polarisation controller elements generally need to be analogue in nature, a Digital-to-Analog converter (DAC) 311 is employed as appropriate in the interface with the digital signal processor 306.

Figure 4 shows the application of the present invention in a repolariser mode of operation, whereby a state of polarisation is restored. The repolariser system 400 shown in Figure 4 is identical to that shown in Figure 3, apart from the addition of a polarisation beam splitter 412 on the output stage in the manner illustrated in Figure 1. The polarisation beam splitter splits the light it receives into its horizontal and vertical polarisation components, which exit the beam splitter via its two ports or arms. For example, if the vertical component is required to be transmitted, the output of the horizontal arm will be a minimum when the desired vertical output is at a maximum. A photodiode 413 is used to monitor the output of the horizontal arm and feed the signal to the digital signal processor 406, which operates to minimise this value by sending suitable control signals to the elements of the polarisation controller 401.

Finally, figure 5 illustrates an optical fibre communication system, which employs polarisation multiplexing of optical signals. Polarisation multiplexing can double the capacity of an optical fibre link by transmitting two data signals with orthogonal

polarisations (H and V) along the same optical fibre. However, the birefringence of the fibre produces a rotation of the polarisation states such that re-alignment is needed at the receive end in order to recover the two data signals. A feedfoward polarisation controller of the present invention can be used to perform this re-alignment and also track any fast polarisation changes that may occur due to fibre vibration, or other environmental factors.

Figure 5 shows both the uplink 501 and the downlink 502 of the optical fibre communication system. Each link comprises a polarisation beam coupler 503 for multiplexing the two input signals having different polarisation states, optical transmission fibre 504 and amplifiers 505, a feedforward polarisation controller 506, and a polarisation beam splitter 507 for demultiplexing the two input signals having different polarisation states. The feedforward polarisation controller 506 can be used to ensure that polarisation state of the two multiplexed signals is correctly oriented for the polarisation demultiplexer 507 to demulitplex and recover the two signals, whilst also tracking any other fast polarisation changes.

As will be appreciated by those skilled in art, a feedforward polarisation controller of the present invention can be implemented in a variety of ways and can be employed in a range of applications and modes of operation where the monitoring and control of the polarisation state of an optical signal is required.

CLAIMS

1. A feedforward controller for controlling the polarisation state of an optical signal, the feedforward controller comprising:

an optical input for receiving an optical input signal having an input polarisation state;

an optical output for transmitting an optical output signal having an output polarisation state;

means for sampling the optical input signal to provide one or more signals representative of the polarisation state of the optical input signal;

means for sampling the optical output signal to provide one or more signals representative of the polarisation state of the optical output signal;

a signal processor coupled to the optical input and output sampling means and adapted to process the representative signals received therefrom to generate one or more control signals; and,

a polarisation controller coupled to the optical input and the optical output, the polarisation controller comprising one or more optical elements adapted to modify the polarisation state of light passing therethrough in dependence on the one or more control signals received from the signal processor.

2. A feedforward controller according to claim 1, wherein the signal processor is adapted to provide one or more control signals whereby the one or more optical elements of the polarisation controller modify the polarisation state of light passing therethrough to maintain a polarisation state of the optical output signal.

3. A feedforward controller according to claim 2, wherein at least one of the optical input and output sampling means comprises:

an optical coupler for sampling the optical signal; and

a polarimeter coupled to the optical coupler and adapted to provide one or more signals representative of the polarisation state of the optical signal.

4. A feedforward controller according to claim 3, wherein the optical coupler comprises a tap coupler.

5. A feedforward controller according to claim 3 or claim 4, wherein the polarimeter comprises:

means to resolve one or more polarisation components of the optical signal; and,

one or more respective photodiodes for measuring the magnitude of the one or more polarisation components resolved.

6. A feedforward controller according to claim 5, wherein the polarisation resolving means comprises a combination of waveplates and/or polariser elements.

7. A feedforward controller according to claim 5 or claim 6, wherein the polarisation resolving means is able to resolve at least three polarisation components of the optical signal.

8. A feedforward controller according to claim 7, wherein the polarisation components define the Stokes vector of the optical signal.

9. A feedforward controller according to any preceding claim, wherein the polarisation controller comprises a plurality of waveplates, each waveplate having an electrically controllable retardance.

10. A feedforward controller according to claim 9, wherein the polarisation controller comprises four waveplates having their fast axes oriented at 0, +45, 0, -45 degrees, respectively.

11. A feedforward controller according to any preceding claim, wherein the signal processor is a digital signal processor and the feedforward controller further comprises:

a first analog-to-digital converter coupled to the optical input sampling means and to the digital signal processor;

a second analog-to-digital converter coupled to the optical output sampling means and to the digital signal processor; and,

a digital-to-analog converter coupled to the digital signal processor and to the polarisation controller.

12. A feedforward controller according to any preceding claim, further comprising:

a polarising component coupled to the optical output for transmitting light of a predetermined polarisation state; and,

means to monitor at least one of an amount of light transmitted by the polarising component and an amount of light rejected by the polarising component and to generate a representative signal therefor,

wherein the monitoring means is coupled to the signal processor and the signal processor is further adapted to process the representative signal received therefrom to generate the one or more control signals for the polarisation controller, whereby the polarisation controller modifies the polarisation state of light passing therethrough such that the amount of light transmitted by the polarising component is maximised and the amount of light rejected by the polarising component is minimised.

13. A feedforward controller according to claim 12, wherein the polarising component comprises a polarising beamsplitter and the monitoring means comprises a photodiode for monitoring the amount of light rejected by the polarising beamsplitter.

14. A feedforward controlled optical fibre system comprising:

a feedforward controller according to any preceding claim;

a first optical fibre transmitting the optical input signal and coupled to the optical input sampling means and to the polarisation controller; and,

a second optical fibre transmitting the optical output signal and coupled to the polarisation controller and to the optical output sampling means.

15. A feedforward controlled system according to claim 14, wherein the first and second optical fibres are optically coupled to the polarisation controller by respective fibre tails.

16. A feedforward controlled system according to claim 14 or claim 15 when dependent on any of claims 1 to 11, wherein the optical fibre system is part of a

polarisation multiplexing optical fibre communications system which multiplexes two or more optical signals having different polarisation states, and wherein the signal processor of the feedforward controller is adapted to generate the one or more control signals for the polarisation controller, whereby the polarisation controller modifies the polarisation state of light passing therethrough such that the polarisation states of the two or more optical signals maintain their orientations.

17. A method for controlling the polarisation state of an optical signal comprising the steps of:

receiving an optical input signal at the input to an optical system which includes a polarisation controller;

generating one or more signals representative of the polarisation state of the optical input signal;

transmitting the optical input signal through the optical system;

generating one or more signals representative of the polarisation state of an optical output signal from the optical system;

processing the signals representative of the input and output polarisation states to determine a characteristic polarisation transfer function of the optical system;

generating one or more control signals for driving the polarisation controller to modify the polarisation state of light passing therethrough in dependence on the characteristic polarisation transfer function; and,

modifying the polarisation state of light passing through the polarisation controller in response to the one or more control signals.

18. A method according to claim 17, wherein the steps are performed continuously to drive the polarisation controller so as to maintain a polarisation state of the optical output signal.

19. A method according to claim 17 or claim 18, wherein the step of generating one or more signals representative of the polarisation state of the optical input signal comprises resolving the optical input signal into one or more components having different polarization and measuring the relative strength of these components.

20. A method according to claim 19, wherein the optical input signal is resolved into at least three different polarisation components.

21. A method according to claim 20, wherein the polarisation components define the Stokes vector of the optical signal.

22. A method according to any of claims 17 to 21, wherein the driving of the polarisation controller comprises adjusting the optical retardation of a birefringent optical component.

23. A method according to any of claims 17 to 22, further comprising the steps of:

generating a signal representative of the magnitude of a polarisation component of the optical output signal;

processing the representative signal; and,

generating the one or more control signals for driving the polarisation controller to modify the polarisation state of light passing therethrough so as to maximise or minimise the magnitude of the polarisation component of the optical output signal.

24. A method according to any of claims 17 to 23, wherein the polarisation controller is driven so as to rotate the polarisation state of the output light by a predetermined angle.

Application No: GB0910204.7 **Examiner:** Mr Nigel Hall

Claims searched: 1-24 **Date of search:** 29 September 2009

Patents Act 1977: Search Report under Section 17

Documents considered to be relevant:

Category	Relevant to claims	Identity of document and passage or figure of particular relevance
X	1,17 at least	WO2004/083945 A1 (Fujitsu)
X,&	1,17 at least	US2005/0162741 A1 (Sone et al.) See abstract and figure
X	1,17 at least	US6576886 B1 (Yao) See abstract and figure
X	1,17 at least	US2003/0086144 A1 (Chou et al.) See fig 9 and corresponding description

Categories:

X	Document indicating lack of novelty or inventive step	A	Document indicating technological background and/or state of the art.
Y	Document indicating lack of inventive step if combined with one or more other documents of same category.	P	Document published on or after the declared priority date but before the filing date of this invention.
&	Member of the same patent family	E	Patent document published on or after, but with priority date earlier than, the filing date of this application.

Field of Search:

Search of GB, EP, WO & US patent documents classified in the following areas of the UKC^{X} :

Worldwide search of patent documents classified in the following areas of the IPC

G02F; H04B

The following online and other databases have been used in the preparation of this search report

Online: EPODOC, WPI

International Classification:

Subclass	Subgroup	Valid From
G02F	0001/01	01/01/2006
H04B	0010/18	01/01/2006