No. 804,792.

PATENTED NOV. 14, 1905.

A. C. BRUNDAGE.

ADJUSTABLE SPIRIT LEVEL.

APPLICATION FILED NOV. 14, 1904.

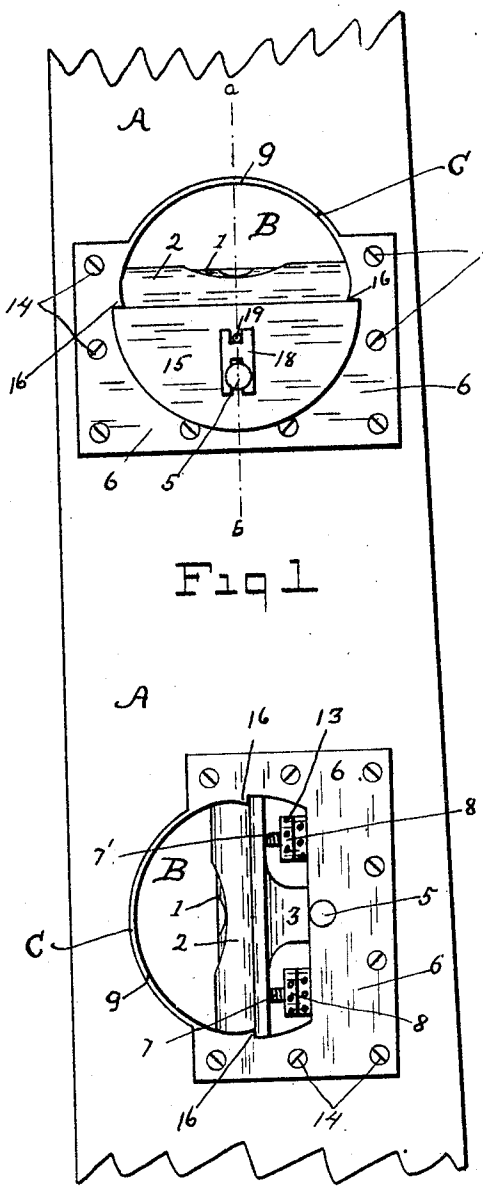

Fig 1

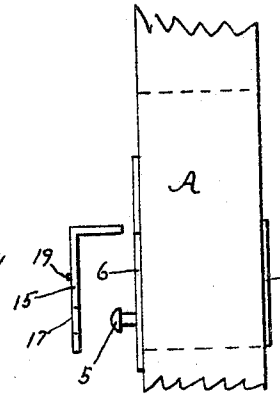

Fig 2

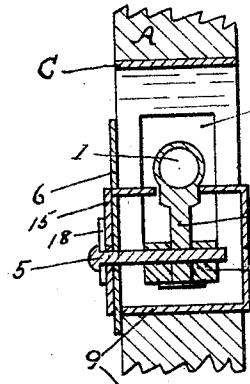

Fig 3

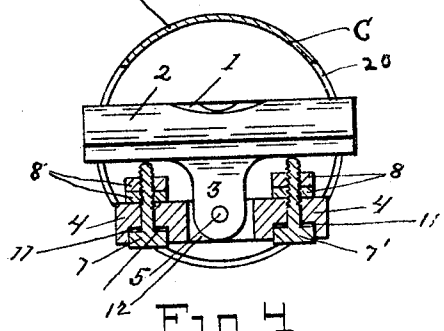

Fig 4

WITNESSES:

F. Van Vliet.

C. B. Thompson

INVENTOR

Abram C. Brundage

BY

John J. Thompson

ATTORNEY

UNITED STATES PATENT OFFICE.

ABRAM C. BRUNDAGE, OF NEWPALTZ, NEW YORK.

ADJUSTABLE SPIRIT-LEVEL.

No. 804,792. Specification of Letters Patent. Patented Nov. 14, 1905.

Application filed November 14, 1904. Serial No. 232,747.

To all whom it may concern:

Be it known that I, ABRAM C. BRUNDAGE, a citizen of the United States of America, and a resident of the town of Newpaltz, in the county of Ulster and State of New York, have invented certain new and useful Improvements in Adjustable Spirit-Levels, of which the following is a specification.

My invention relates to improvements in adjustable "spirit levels or plumbs," and has special reference to that style of level or plumb used by masons and also to that class of plumb which has one edge cut on a taper—that is, it is not parallel with the opposite edge—for use on work which is inclined at any required number of degrees from the perpendicular.

The object of my invention is to provide a simple, reliable, and inexpensive adjustable bubble-tube holder which can be inserted and secured in the usual wooden level or plumb-stock and which does not require to be used in connection with a stock of special construction or design and also allows of the rapid removal of the tube-holder for the insertion of a new bubble-tube and provides for the simple and secure adjustment of the bubble-tube to the desired degree, which will be found of special advantage in using the plumb on work that is inclined from the perpendicular.

The above-mentioned and other objects are attained by the construction and arrangement of parts, as described in the accompanying drawings, and as set forth in this specification.

In the drawings, Figure 1 is a plan view showing one bubble-case arranged for plumbing and the other for leveling, also one has the removable cover on and the other shows it removed. Fig. 2 is a view of the edge of the plumb and bubble-case, showing the cover detached. Fig. 3 is a sectional view of the case on the line *a b*, Fig. 1. Fig. 4 is a plan view of bubble-case, partly in section, showing construction of parts.

Similar figures and letters indicate corresponding parts.

My invention as herein shown is attached to the usual mason's plumb-stock A, which has one edge parallel to a bubble-tube, while the opposite edge diverges from the same bubble-tube. The edge surfaces are applied to the work in using the instrument.

The circular openings B are formed in the stock to receive the bubble-case C, which is formed as follows:

The circular casing 9, of metal or other suitable material, is formed with the flange 6 on the front or face side (which is used for securing it to the plumb-stock by the screws 14) and the protecting semicircular back casing 10, which forms a part of the back of said casing and between which is secured in a rigid manner the rectangular socket 4 or base, which is provided with two holes 11, countersunk to receive the square-headed bolts 7 and 7′, and is also formed with a rectangular hole or slot 12, into which is inserted the tongue of the rocker-arm 3, that forms part of the bubble-tube 2, which holds the bubble-glass 1, said rocker-arm being secured to the socket 4 by the pin 5, which is held in place by the strain upon it caused by the upward pressure of the adjusting-bolts 7 7′ when forced upward by the screwing down of the lock-nuts 8, which are turned by a pin inserted into the holes 13, drilled into their outer edges.

The ends of the rocker-arm 3 are allowed to move up and down freely in the slots 20, cut in the circular case 9.

There is also provided a removable flanged cover 15, that is attached by placing the flange under the lugs 16 and is formed with a hole 17, that will freely pass over the head of the pin 5, and is secured by the small slotted catch 18, that is passed between said cover 15 and the under side of the head of the pin 5 and is held in place by the pin 19 in the cover 15.

The adjustment and removal of the bubble-tube are as follows: The pair of lock-nuts 8 on one side are loosened by turning them in an upward direction by a pin inserted in the holes 13. This will allow the bolt 7 to release its pressure and drop slightly away from the under side of the rocker-arm 3, which allows said rocker-arm to rock slightly on the center pin 5, which, now relieved from the strain upon it, can be pulled out and the rocker-arm removed. By loosening one pair of lock-nuts 8 and tightening or turning down of the other pair the bolt 7 on the one side is receded from the rocker-arm and the bolt 7′ on the other side is forced upward, thus securing the rocker-arm at any desired degree. The bubble-case C being placed about equi-distant

from either edge of the stock, it allows of the use of either the straight or tapered edge of the stock. Also the bubble-case can be seen and read from either side or upside down.

A level constructed as herein described possesses great advantages in the arrangement of the bubble-case for removal and adjustment and the replacing of broken bubble-tubes and the adjustment of the instrument to the desired plane or angle and the secureness with which it is held by the lock-nuts.

Having thus described my invention, what I claim as new, and desire to secure by Letters Patent of the United States of America, is—

1. In a spirit-level or plumb, a bubble-tube case or holder, formed of a metallic circular casing, partly flanged on the face side, and partly inclosed on the reverse side, and having a removable cover, and means for securing said cover, substantially as described.

2. A spirit-level, having a metallic bubble-tube case, between the sides of which is rigidly secured a rectangular base or socket, slotted midway its ends and sides, and provided with two holes partly countersunk on the lower or under side, and square-headed bolts, for the purpose set forth, and substantially as described.

Signed at Poughkeepsie, county of Dutchess, State of New York, this 5th day of November, 1904.

ABRAM C. BRUNDAGE.

Witnesses:
DAVID M. MATHESEN,
THOMAS MULLEN.