O. H. L. WERNICKE.

SAWING MACHINE.

APPLICATION FILED AUG. 30, 1919.

1,368,777.

Patented Feb. 15, 1921.

2 SHEETS—SHEET 1.

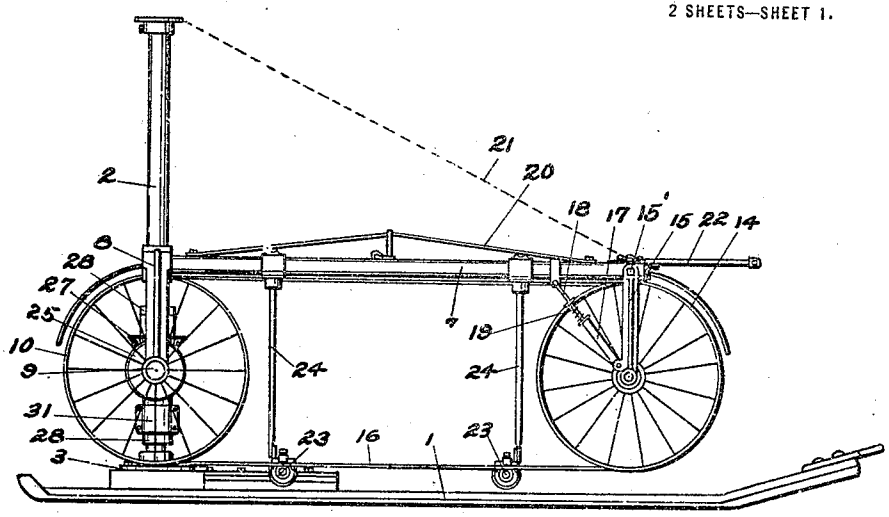

Fig. I.

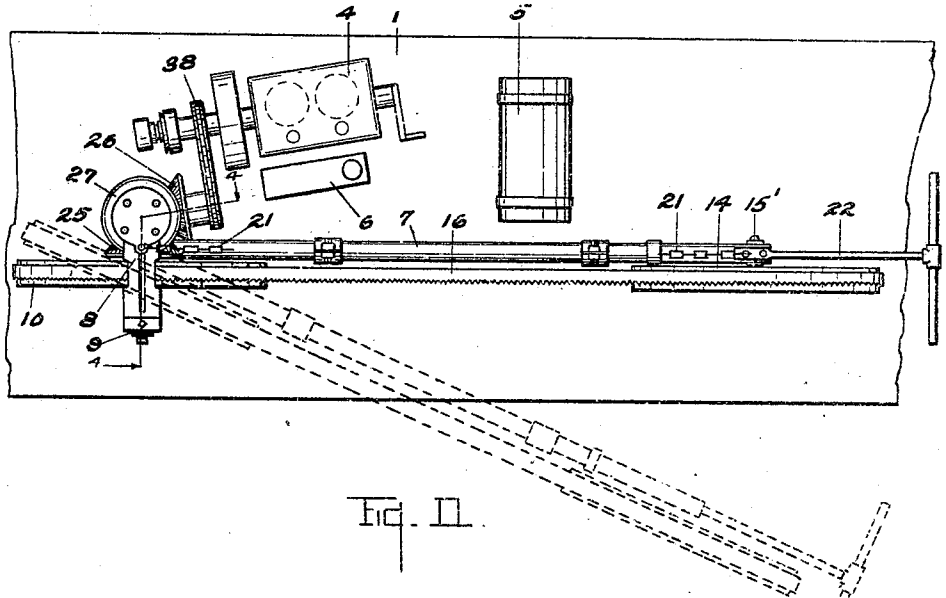

Fig. II.

Inventor

OTTO H.L. WERNICKE

Witnesses

Fred Ullrich

Kenn Gilman

By Chappell & Earl

Attorneys

O. H. L. WERNICKE.

SAWING MACHINE.

APPLICATION FILED AUG. 30, 1919.

1,368,777.

Patented Feb. 15, 1921.

2 SHEETS—SHEET 2.

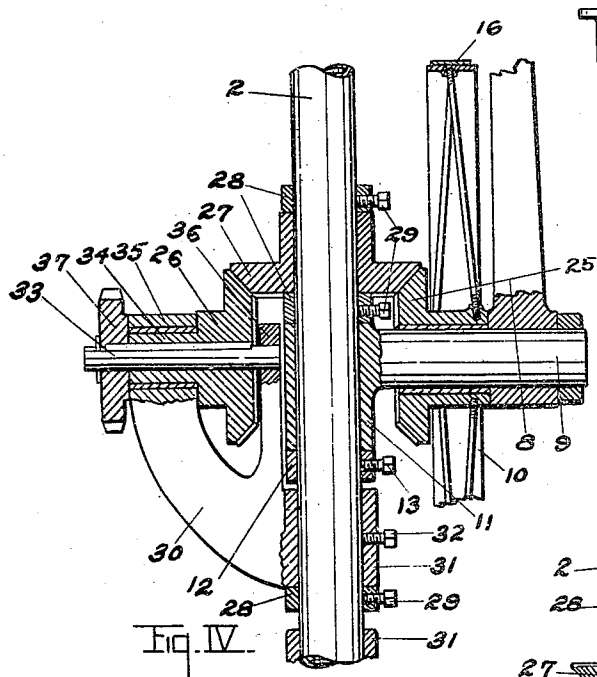

Fig. IV.

Fig. III.

Inventor

OTTO H. L. WERNICKE

Witnesses

Fred Ullrich

Kenn Gilman

By Chappell & Earl

Attorneys

UNITED STATES PATENT OFFICE.

OTTO H. L. WERNICKE, OF GULL POINT, FLORIDA.

SAWING-MACHINE.

1,368,777. Specification of Letters Patent. Patented Feb. 15, 1921.

Application filed August 30, 1919. Serial No. 320,830.

To all whom it may concern:

Be it known that I, OTTO H. L. WERNICKE, a citizen of the United States, residing at Gull Point, county of Escambia, State of Florida, have invented certain new and useful Improvements in Sawing-Machines, of which the following is a specification.

This invention relates to improvements in sawing machines.

My improved sawing machine is especially designed by me for sawing off stumps, such as stumps of the southern pine, which are utilized in the manufacture of turpentine and other products, and I have illustrated my invention in the accompanying drawing in a machine especially designed for this use. My invention, however, is readily adapted or modified for other uses.

The main objects of this invention are:

First, to provide an improved sawing machine which may be transported from stump to stump and quickly adjusted to the work.

Second, to provide an improved sawing machine for the sawing off of stumps by means of which a very large amount of work is accomplished.

Third, to provide an improved sawing machine having these advantages which is comparatively simple and economical in structure and very durable.

Further objects, and objects relating to structural details, will definitely appear from the detailed description to follow.

I accomplish the objects of my invention by the devices and means described in the following specification. The invention is clearly defined and pointed out in the claims.

A structure which is a preferred embodiment of my invention is clearly illustrated in the accompanying drawing forming a part of this specification, in which:

Figure I is a side elevation of a sawing machine embodying the features of my invention, the motor being omitted.

Fig. II is a plan view thereof with the saw carrying boom shown in one position by dotted lines, the transporting or portable base being partially broken away, the motor or engine being shown in conventional form.

Fig. III is an end elevation looking from the left of Fig. I, the base being in sections.

Fig. IV is an enlarged detail view partially in section on the broken line 4—4 of Fig. II.

In the drawing similar reference characters refer to similar parts throughout the several views.

Referring to the drawing, the transporting or portable base 1, in the structure illustrated, is in the form of a boat or skid designed to be hauled from stump to stump as the work progresses and is of such dimensions as to afford a substantial base for the machine on uneven or irregular ground.

At one end of the base is the mast 2, the foot 3 of the mast being rigidly mounted on the base. The engine 4, shown conventionally in Fig. II, is mounted at one side so as not to obstruct the swing of the saw carrying boom. 5 represents the cooling water tank and 6 the gasolene tank. These parts, however, may be located as found convenient.

The boom 7 is carried by an arm 8 mounted on the outer end of the spindle 9, the arm being keyed to the spindle so that it is maintained in an upright position.

The driving band wheel 10 is mounted on the spindle at the inner side of the arm 8, the arm being provided with an over-hang at its upper end so that the boom is supported close to the mast. The spindle is carried by a sleeve 11 rotatably mounted on the mast and supported by the adjustable collar 12, the collar having a set screw 13 by means of which it is secured in its adjusted position.

The other band wheel 14 is carried by a hanger 15 pivotally mounted at 15′ on the outer end of the boom. The band saw 16 is shown conventionally. Suitable tension thereon is secured by means of a tension device comprising a pair of telescoping rods 17 and 18, one of which is secured to the boom and the other to the lower end of the hanger, a coil spring 19 being arranged on the rods.

A truss 20 is provided for the boom. The

outer end of the boom is supported by the guy chain 21 extending from the upper end of the mast. A handle 22 is provided at the outer end of the boom for manipulating the saw.

Saw guides 23, shown conventionally, are provided for the lower reach of the saw, the saw guides being positioned so as to support the saw at either side of the work. These saw guides are carried by hangers 24 on the boom.

The band wheel 10 is provided with a beveled gear 25 which is connected to the driving gear 26 by the gear 27. The gear 27 is rotatably mounted on the mast being adjustably supported thereon by means of collars 28 disposed above and below the same, and provided with set screws 29.

The driving gear 26 is carried by a bracket 30 having a sleeve 31 on the mast; a collar 28 below the sleeve supports it in its adjusted position. The sleeve 31 is provided with set screws 32 whereby it may be secured against rotation on the shaft in proper position to receive the driving connections from the motor.

The bracket 30 is provided with bearings for the driving gear, the driving gear being keyed to the shaft 33 and having a hub portion 34 disposed in the bearing 35 in the outer arm, the inner end of the shaft being disposed in the bearing 36 in the inner arm of the support.

The driving sprocket 37 is keyed to this shaft 33 and connected by the chain 38 to the driving shaft of the engine, shown conventionally in Fig. II.

With the parts thus arranged, the machine may be quickly adjusted to saw off stumps at the desired height. The saw is easily manipulated to the work, it being found very practical to haul the machine from stump to stump, adjustability of the saw being such that accurate adjustment of the machine relative to the stump is not required. It is not necessary to stop the motor after each piece of work, therefore, only minimum delays are caused in moving from stump to stump and setting for the work.

I have illustrated and described my invention in a form which I have found very practical in use, certain parts being shown conventionally as the structural details thereof form no part of my present invention. I have not attempted to illustrate or describe certain modifications or adaptations which I contemplate as I believe the disclosure made will enable those skilled in the art to which my invention relates to embody or adapt the same as may be desired.

Having thus described my invention, what I claim as new and desire to secure by Letters Patent, is:

1. The combination of a portable base, a mast mounted thereon, a spindle carried by a sleeve rotatably mounted on said mast, an arm on said spindle, a boom mounted on said arm, a band saw, band wheels one of which is mounted on said spindle and the other on said boom.

2. The combination of a portable base, a mast mounted thereon, a spindle carried by a sleeve rotatably mounted on said mast, a band saw, a band wheel mounted on said spindle, an upwardly projecting arm mounted on said spindle, at outer side of said band wheel and provided with an inward projection at its upper end overhanging said band wheel, and a boom mounted on said projection of said arm above said band wheel.

3. The combination of a portable base, a non-rotatable mast mounted thereon, a spindle carried by a sleeve rotatably mounted on said mast, an arm on said spindle, a boom mounted on said arm, a band saw, band wheels, one of which is mounted on said spindle on the inner side of said arm and provided with a beveled gear, a driving gear, a supporting bracket therefor carried by sleeve mounted on said mast below said spindle sleeve, and a beveled gear rotatably mounted on said mast above said spindle sleeve connecting said driving and band wheel gears.

4. The combination of a portable base, a non-rotatable mast mounted thereon, a spindle carried by sleeve rotatably mounted on said mast, a boom carried by said spindle, a band saw, band wheels, one of which is mounted on said spindle, and the other of which is carried by said boom, a driving gear, a supporting bracket therefor mounted on said mast independently of said spindle sleeve, a driving gear on said band wheel spindle connected to said band wheel, and supporting collars for said spindle, bracket and connecting gear independently adjustable on said mast.

5. The combination of a portable base, a non-rotatable mast mounted thereon, a spindle rotatably mounted on said mast, means for supporting said spindle for vertical adjustment of said mast, a boom carried by said spindle to swing therewith, a band saw, band wheels, one of which is mounted on said spindle and provided with a beveled gear, the other band wheel being mounted on said boom, a driving gear, a support therefor mounted on said mast for vertical adjustment thereon, and a beveled gear rotatably mounted on said mast for vertical adjustment thereon connecting said driving and band wheel gears.

6. The combination of a portable base, a non-rotatable mast mounted thereon, a spindle carried by a sleeve rotatably mounted on said mast, an arm on said spindle, a boom mounted on said arm, a band saw,

band wheels, one of which is mounted on and provided with a beveled gear on said spindle, and the other being carried by said boom, a driving gear, a supporting bracket therefor carried by a sleeve mounted on said mast for rotative and vertical adjustment, a beveled gear rotatably mounted on said mast connecting said driving and band wheel, and supporting collars for said spindle, bracket sleeve and connecting gear adjustably mounted on said mast.

In witness whereof I have hereunto set my hand and seal in the presence of a witness.

OTTO H. L. WERNICKE. [L. S.]

Witness:

GLADYS P. CROSS.