(12) INTERNATIONAL APPLICATION PUBLISHED UNDER THE PATENT COOPERATION TREATY (PCT)

(19) World Intellectual Property Organization
International Bureau

(43) International Publication Date
3 November 2005 (03.11.2005)

PCT

(10) International Publication Number
WO 2005/104054 A1

(51) International Patent Classification[7]: G08B 23/00, A47G 29/12

(21) International Application Number: PCT/CA2005/000629

(22) International Filing Date: 26 April 2005 (26.04.2005)

(25) Filing Language: English

(26) Publication Language: English

(30) Priority Data:
60/564,941 26 April 2004 (26.04.2004) US

(71) Applicant *(for all designated States except US)*: **ARMSTRONG'S COMMUNICATION LTD.** [CA/CA]; 380 Salmon River Mth. Rd., Coal Creek, New Brunswick E4A 2T7 (CA).

(72) Inventors; and

(75) Inventors/Applicants *(for US only)*: **ARMSTRONG, Gary** [CA/CA]; c/o Armstrong's Communication Ltd., 380 Salmon River Mth. Rd., Coal Creek, New Brunswick E4A 2T7 (CA). **DEMMINGS, Craig** [CA/CA]; c/o Armstrong's Communication Ltd., 380 Salmon River Mth. Rd., Coal Creek, New Brunswick E4A 2T7 (CA). **WAINWRIGHT, Wayne** [CA/CA]; c/o Armstrong's Communication Ltd., 380 Salmon River Mth. Rd., Coal Creek, New Brunswick E4A 2T7 (CA). **WATSON, George** [CA/CA]; 21 Hosey Hill Crescent, Agincourt, Ontario M1F 2X3 (CA). **CAHALAN, Leo** [CA/CA]; 209 Ellerslie Avenue, Willowdale, Ontario M2N 1Y3 (CA). **SMALL, Dan** [CA/CA]; c/o Armstrong's Communication Ltd., 380 Salmon River Mth. Rd., Coal Creek, New Brunswick E4A 2T7 (CA).

(74) Agent: **DERENYI, Eugene**; Stikeman Elliott LLP, 1600-50 O'Connor Street, Ottawa, ontario K1P 6L2 (CA).

(81) Designated States *(unless otherwise indicated, for every kind of national protection available)*: AE, AG, AL, AM,

*[Continued on next page]*

(54) Title: CONTAINER MONITORING SYSTEM

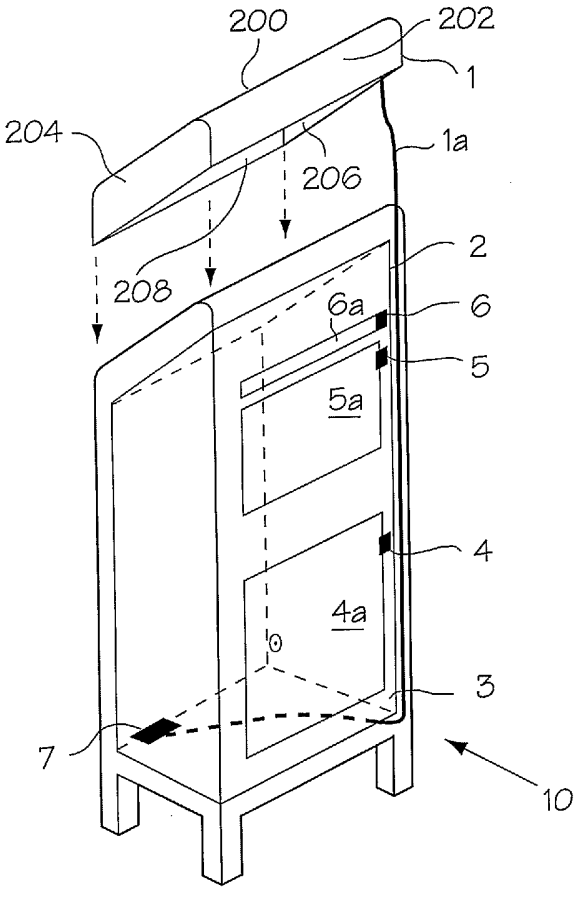


(57) Abstract: A container monitoring system which includes a microprocessor comprising a memory to store data, and a control program executed by said microprocessor, said microprocessor having a stand-by mode and an active mode, a communications means connected to said microprocessor for transmitting data from said microprocessor to a monitoring station, a zone monitoring device on the container connected to said microprocessor in a loop with said microprocessor in said stand-by mode, a power source for supplying power to said microprocessor, communications means and zone monitoring device, wherein upon said microprocessor receiving an input signal from said zone monitoring device, said control program directs said microprocessor to switch to active mode, generate and store in said memory an alarm message corresponding to said input signal from said zone monitoring device, activate said communications means, and transmit said alarm message to a monitoring station.

WO 2005/104054 A1

AT, AU, AZ, BA, BB, BG, BR, BW, BY, BZ, CA, CH, CN, CO, CR, CU, CZ, DE, DK, DM, DZ, EC, EE, EG, ES, FI, GB, GD, GE, GH, GM, HR, HU, ID, IL, IN, IS, JP, KE, KG, KM, KP, KR, KZ, LC, LK, LR, LS, LT, LU, LV, MA, MD, MG, MK, MN, MW, MX, MZ, NA, NI, NO, NZ, OM, PG, PH, PL, PT, RO, RU, SC, SD, SE, SG, SK, SL, SM, SY, TJ, TM, TN, TR, TT, TZ, UA, UG, US, UZ, VC, VN, YU, ZA, ZM, ZW.

**(84) Designated States** *(unless otherwise indicated, for every kind of regional protection available)*: ARIPO (BW, GH, GM, KE, LS, MW, MZ, NA, SD, SL, SZ, TZ, UG, ZM, ZW), Eurasian (AM, AZ, BY, KG, KZ, MD, RU, TJ, TM), European (AT, BE, BG, CH, CY, CZ, DE, DK, EE, ES, FI, FR, GB, GR, HU, IE, IS, IT, LT, LU, MC, NL, PL, PT, RO, SE, SI, SK, TR), OAPI (BF, BJ, CF, CG, CI, CM, GA, GN, GQ, GW, ML, MR, NE, SN, TD, TG).

**Published:**
— *with international search report*

*For two-letter codes and other abbreviations, refer to the "Guidance Notes on Codes and Abbreviations" appearing at the beginning of each regular issue of the PCT Gazette.*

# CONTAINER MONITORING SYSTEM

## FIELD OF THE INVENTION

[0001] This invention relates to a container monitoring system and in particular, a monitoring system for postal and courier drop off boxes.

## BACKGROUND OF THE INVENTION

[0002] In conventional postal and courier drop off boxes, there is no way to determine whether there are articles in the box without someone physically checking the contents of each box. This results in many unnecessary pick-up stops by postal and courier workers at empty boxes.

[0003] Conventional postal and courier drop off boxes are also susceptible to tampering, vandalism and theft, which is usually only discovered by postal or courier workers at the next scheduled pick-up.

[0004] In addition, in today's age of terrorism, packages containing explosives, chemical or biological threats can be left in drop off boxes and remain undetected thus posing a threat to persons using the box or situated near it.

[0005] Prior art drop off boxes have been proposed which include some security features. One such drop off box is disclosed in PCT publication WO 00/76378 entitled Network Connected Delivery Box Using Access Codes and Method for Providing Same, published on December 21, 2000 and naming Holtkamp et al as inventors. The Holtkamp application discloses a delivery box which includes a communications unit linking the box with a central computer at a delivery box company. The box is equipped with sensors for detecting when items are placed in the box and for monitoring the ambient temperature in the box.

[0006] Item placement and ambient temperature data from the sensors is transmitted by the communications unit via a portal interface with a cellular or satellite communications link to the central computer. The box can be integrated through the portal interface with a delivery company's GPS tracking system.

[0007] PCT publication WO 97/43935 entitled A Mail Box, published on November 27, 1997 and naming Lateo as inventor discloses a mail box which includes a microprocessor controlled locking system which can be activated in the event of an attempted forced entry into the mail box. A sensor detects the deposit of articles into the box. The box is linked to a monitoring centre by a communications link.

[0008] None of the prior art boxes discussed above include sensors for detecting the deposit of hazardous materials in the box. Furthermore, where the security and communication systems in the prior art boxes are battery powered, no power saving functionality is taught.

[0009] Thus there is a need for a container monitoring system having a low-power stand-by mode which permits the monitoring system to be operational over extended periods of time.

## SUMMARY OF THE INVENTION

[0010] The above-mentioned need is met by the invention by providing in one embodiment a container monitoring system which includes a microprocessor comprising a memory to store data, and a control program executed by said microprocessor, said microprocessor having a stand-by mode and an active mode, a communications means connected to said microprocessor for transmitting data from said microprocessor to a monitoring station, a zone monitoring device on the container connected to said microprocessor in a loop with said microprocessor in said stand-by mode, a power source for supplying power to said microprocessor,

communications means and zone monitoring device, wherein upon said microprocessor receiving an input signal from said zone monitoring device, said control program directs said microprocessor to switch to active mode, generate and store in said memory an alarm message corresponding to said input signal from said zone monitoring device, activate said communications means, and transmit said alarm message to a monitoring station.

## DESCRIPTION OF THE DRAWINGS

**[0011]** The invention is described below in greater detail with reference to the accompanying drawings, which illustrate preferred embodiments of the invention and wherein:

**[0012]** Figure 1 is a perspective view of a postal box retrofited with a monitoring system according to the invention;

**[0013]** Figure 2 is a block diagram of a low power controller according to the invention;

**[0014]** Figure 3 is a schematic block diagram of a power supply for a low power controller according to the invention;

**[0015]** Figure 4 is a schematic/block diagram of a low power controller according to the invention;

**[0016]** Figure 5 is a schematic/block diagram of a low power controller according to the invention;

**[0017]** Figure 6 is a front view of a fiberglass parcel/postage box according to the invention;

**[0018]** Figure 7 is a side view of a fiberglass parcel/postage box according to the invention;

[0019] Figures 8 and 9 are block diagrams of a portable monitoring unit according to the invention; and

[0020] Figure 10 is a flow chart which illustrates the major operations of the control program.

## DETAILED DESCRIPTION OF THE PREFERRED EMBODIMENTS

[0021] Referring to Fig. 1, a conventional postal box of the type commonly used by Canada Post indicated generally at 10 is shown retrofitted with a monitoring system according to the invention. The box 10 includes a monitoring unit 1 which is housed in a cap which can be fitted to the top of the postal box 10 to retrofit it. The hollow cap 1 includes a top 200 and sides 202, 204, 206 and 208. The unit 1 is connected to surface mounted magnetic contacts 4, 5, 6 on doors 4a, 5a and 6a respectively of the box 10 via wire 1a. Contacts 4, 5, 6 correspond to zones 1, 2, 3 of the monitoring system. Wiring is used to connect the unit 1 to the contacts 4, 5 and 6 via a surface mounted contact 3, model GRI29AWH.

[0022] A hollow tube 2 houses the wiring 1a to keep it from interfering with the operation of the box 10. The unit 1 is also connected by wire to a smoke detector 7, model DSCMN-140 C. The smoke detector 7 corresponds to zone 4 of the monitoring system.

[0023] Other contacts or sensors can be used with the monitoring system depending upon operational requirements. For example, sniffer sensors for detecting bombs and biological agents placed inside the postal box 10 by terrorists can be used. Temperature sensors can also be used to monitor temperature within and without the postal box. A GPS system can also be incorporated into the system for tracking the position of the postal box should it be removed from its location by vandals or thieves. A potentiometer or mercury switch can also be used inside the postal box 10 and connected to the monitoring unit 1 to monitor whether the postal

box 10 has been tipped or moved. All such monitoring devices are connected to the monitoring unit 1 in a similar fashion to the magnetic contacts 4, 5, 6 or the smoke detector 7 as described above.

**[0024]** Fig. 2 is a block diagram of a monitoring system according to the invention. The system is controlled by a microprocessor 20 integrated with a smart circuitry board low power controller (discussed in more detail below) which forms part of the monitoring unit 1. Inputs 21 to 24 are connected to the microprocessor 20 and are the inputs from the magnetic contacts 4, 5, 6 and detector 7, respectively. The microprocessor 20 is also connected to a connector 26 which can be used to connect an external programming key pad (not shown) to the microprocessor 20.

**[0025]** Microprocessor 20 is connected to three relays, 28, 29 and 30 which in turn are connected to controlled devices 32, 33 and 34. The controlled devices 32 to 34 can be motor driven locks, for example, which can be activated to lock the doors of the postal box 10 in the event of a hazardous package being detected in the postal box 10.

**[0026]** The microprocessor 20 is also connected to a solid state power switch 36 which in turn is connected to a Fast Track System ("FTS) radio 38 manufactured by Numerex Corp. of Atlanta, Georgia, U.S.A. (other suitable wireless communications devices can also be used). A serial data in/out connection 40 connects the microprocessor 20 to the FTS radio 38. The FTS radio 38 communicates to a central monitoring station 42 via cellular network 44.

**[0027]** A solar panel 46 is connected to a battery voltage regulator 47 which in turn is connected to a rechargeable battery 48 and a microprocessor voltage regulator 49 and then to the microprocessor 20 to provide power to the monitoring system. The solar panel 46 charges the battery 48. The regulator 47 down regulates the voltage from the solar panel 46 to 12V and the regulator 49 in turn down regulates the voltage to 3.3V, the operating voltage of the microprocessor 20.

**Low Power Controller**

[0028] Referring to Figs. 3, 4, and 5, the low power controller of the invention includes a circuit board with a PIC 16F870-I/SP ("PIC") microprocessor for controlling the operation of the monitoring system of the invention. The PIC microprocessor is designed to operate in a stand-by low power (sleep) mode and in a full power an active mode. The PIC processor controls the operation of the controller using a control program comprised of code programmed in C++.

[0029] The PIC microprocessor is connected to a 74HC4051 multiplexer. The multiplexer is connected to an RN2 resistor network. The RN2 resistor network is connected to a terminal strip connector CN1with input screws Z1 to Z6 and common screws C.

[0030] The PIC microprocessor is also connected to an SPX 485 driver which in turn is connected to an RJ45 jack which can be used to connect the controller to a hand-held key pad.

[0031] The PIC microprocessor is also connected to a MAX202ECP 9 ("MAX") RS-232 driver manufactured by Maxim which in turn is connected to a DB9 MALE plug. The DB9 MALE plug is connected to an FTS radio. The MAX RS-232 driver converts the binary communication of the PIC microprocessor to the RS-232 protocol of the FTS radio when the PIC microprocessor is sending serial data to the FTS radio. When serial data is received from the FTS radio, the MAX microprocessor converts the RS-232 communication of the FTS radio to the binary communication of the PIC microprocessor.

[0032] The PIC processor is also connected to relays which operate devices connected to the relays such as door locks.

[0033] The solar panel unit is a high output micro-thin solar panel unit connected to a low drop-out voltage regulator manufactured by National

Semiconductor which is used to charge a 12 V 7AHr storage battery. A solar voltage ("Vsolar") monitor, a voltage output ("Vo") monitor, a battery voltage ("Vbatt") monitor are used to determine optimum conditions for battery charging. A 3V switch-mode regulator is used to power the low-power PIC processor. Power generated by the solar panel unit is used to charge the storage battery. The low drop-out regulator regulates the amount of charge given to the storage battery up to a defined maximum voltage such that the storage battery is not overcharged. The low voltage regulator maintains a constant voltage output when sufficient sun-light is falling on the solar panel.

**[0034]** In operation, the PIC microprocessor has a stand-by low power mode and a full power active mode. The PIC microprocessor in the stand-by mode operates on a low power consumption of 5 to 6 milliamps of current which is normally supplied by the solar panel unit. If the solar panel unit is not operational, such as because it is covered with snow, power to the PIC microprocessor is supplied by the storage battery. The 12V 7AHr rechargeable lead-acid battery used in the system has a stand-by life of about 10 to 11 days before it requires a recharge from the solar panel unit.

**[0035]** The PIC microprocessor operates on a normally closed input in stand-by mode as it waits for an open loop signal (alternatively, a normally open loop input can be used). When a zone is triggered, (for example if a door is opened on zone 1), the input loop for that zone opens and the voltage on that zone goes to about 5V and the PIC microprocessor goes into an active mode and turns on an electronic switch (a field effects transistor manufactured by International Rectifier) which in turn switches on the FTS radio. The triggered zone is an analogue input which is used by the PIC microprocessor to generate an electronic alarm message corresponding to that zone input. The alarm message is stored in the scratch pad memory of the PIC microprocessor.

[0036] The FTS radio then auto-enrolls itself into a cellular network which takes about 30 seconds. After the enrollment is complete, the FTS radio sends a request to the PIC microprocessor that it is now safe to send the zone input alarm message which has been stored in the PIC microprocessor. The PIC microprocessor waits for the enrollment before sending the alarm signal to the FTS radio for transmission to a central monitoring station or other monitoring device. The message is received by the FTS radio and the FTS radio sends the message through the control channel portion of the cellular network. The PIC microprocessor then switches off the FTS radio to conserve power and starts a timer for a pre-set period of time so that subsequent triggered events will not be transmitted until the set time expires. After the time expires, the new event will restart the cycle described above.

[0037] The relays and the FTS radio require 12V DC for operation, the driver integrated circuits require 5VDC for operation and the PIC microprocessor requires 3 VDC for operation. The FTS radio operates at 100 milli-amps when it is energized.

**Fiberglass Parcel/Postage Box**

[0038] Referring to Figs. 5, 6 and 7, in another embodiment of the invention, the monitoring unit can be integrated into a postal box during manufacture. The postal box of Figs. 5, 6, and 7 is constructed from fiberglass and includes a weighted base 110 to ground the box. The main compartment of the box includes two doors. The upper door 100 is for receiving mail and parcels. The lower door 103 is a pick-up door by which a mail/courier employee gains access to the contents of the box during a pick-up.

[0039] The box includes a solar panel 105 which is affixed to the front of the box for locations where the box is located up against a building or a wall. The solar panel 105 is inclined slightly upwards toward the sky to capture the sun's rays. Alternatively, a solar panel 106 can be affixed to the inclined top of the box for open area locations. The monitoring unit is housed in a sealed compartment 108 or 107

next to the solar panel 105 or 106 as the case may be and connected to it. A hollow tube 104 attached to the inside of the box houses cables connecting the various contacts and sensors of the box to the monitoring unit 108 or 107 in a similar manner to the postal box shown in Fig. 1.

**[0040]** For very remote or low sunlight locations, an additional battery (not shown) can be included in the base 110 and connected to the monitoring unit 108 or 107 using wiring which is carried inside a second hollow tube 109. The box is equipped with remote lock-down devices which lock the doors 100 and 103 to prevent entry into the box in response to a lock-down signal. The doors 100 and 103 can be unlocked by the appropriate signal transmitted from a central monitoring station or a handheld device.

**[0041]** Referring to Figs. 8 and 9, in a further embodiment of the invention, a monitoring unit is housed in a portable housing which includes a low power control unit, a battery and a radio as the major components, connected to each other and other components (not shown) in a similar manner to the pervious embodiments discussed above. The portable housing can be a suitcase. The portable unit inclused connector 300 for connecting the unit to a solar panel, connector 301 for connecting the unit to sensors and/or controlled devices and connector 302 for connecting the unit to an antenna.

**[0042]** The monitoring unit can be used in a number of applications such as in trucks. In trucks the portable monitoring unit can be connected to a fixed low temperature sensor such as model SNIF-20 manufactured by WINLAND or a high low temperature sensor such as model WINUTAL manufactured WINLAND, to monitor temperature in refrigeration trucks whereby if the temperature in the truck rises above or below a certain level due to a failure of the climate control system, a trouble signal is sent by the monitoring unit to a central monitoring center to locate the driver. The monitoring unit can also be used to monitor opening of doors in

trucks, trains, shipping containers and the like and to send an intrusion signal upon unauthorized entry. It will be understood by those skilled in the art that depending on the container being monitored and the sensors used, the wiring arrangement described in the pervious embodiments will have to be modified accordingly.

WE CLAIM:

1. A container monitoring system comprising:

a microprocessor including,

a memory to store data,

a control program executed by said microprocessor;

said microprocessor having a stand-by mode and an active mode;

a communications means connected to said microprocessor for transmitting data from said microprocessor to a monitoring station;

a zone monitoring device on the container connected to said microprocessor with said microprocessor normally in said stand-by mode,

a power source for supplying power to said microprocessor, communications means and zone monitoring device;

wherein upon said microprocessor receiving an input signal from said zone monitoring device, said control program directs said microprocessor to,

switch to active mode,

generate and store in said memory an alarm message corresponding to said input signal from said zone monitoring device,

activate said communications means, and

transmit said alarm message to a monitoring station.

2. A container monitoring system according to claim 1, further including a controlled device connected to said microprocessor and controlled by said control program.

3. A container according to claim 2, wherein said controlled device is a motor driven lock.

4. A container monitoring system according to claim 1, wherein said zone monitoring device is selected from the group consisting of magnetic contacts, smoke detectors, carbon monoxide detectors, sniffer sensors, temperature sensors, motion sensors, potentiometer switches, and mercury switches.

5. A container monitoring system according to claim 1, wherein said communications device is a wireless device.

6. A container monitoring system according to claim 1, wherein said power supply is a battery.

7. A container monitoring system according to claim 6, further including a solar panel connected to said battery.

8. A container monitoring system according to claim 1, further including a GPS device connected to said processor.

9. A container monitoring system according to claim 1 wherein said system is housed in a portable housing.

10. A postal box with a door for removing mail from the postal box comprising:

a container monitoring system according to claim 1 wherein said contact is a magnetic contact on said door.

11. A postal box according to claim 10 wherein said container monitoring system is housed in a cap affixed to the top of the postal box.

12. A postal box according to claim 10, further including a solar panel for powering said system.

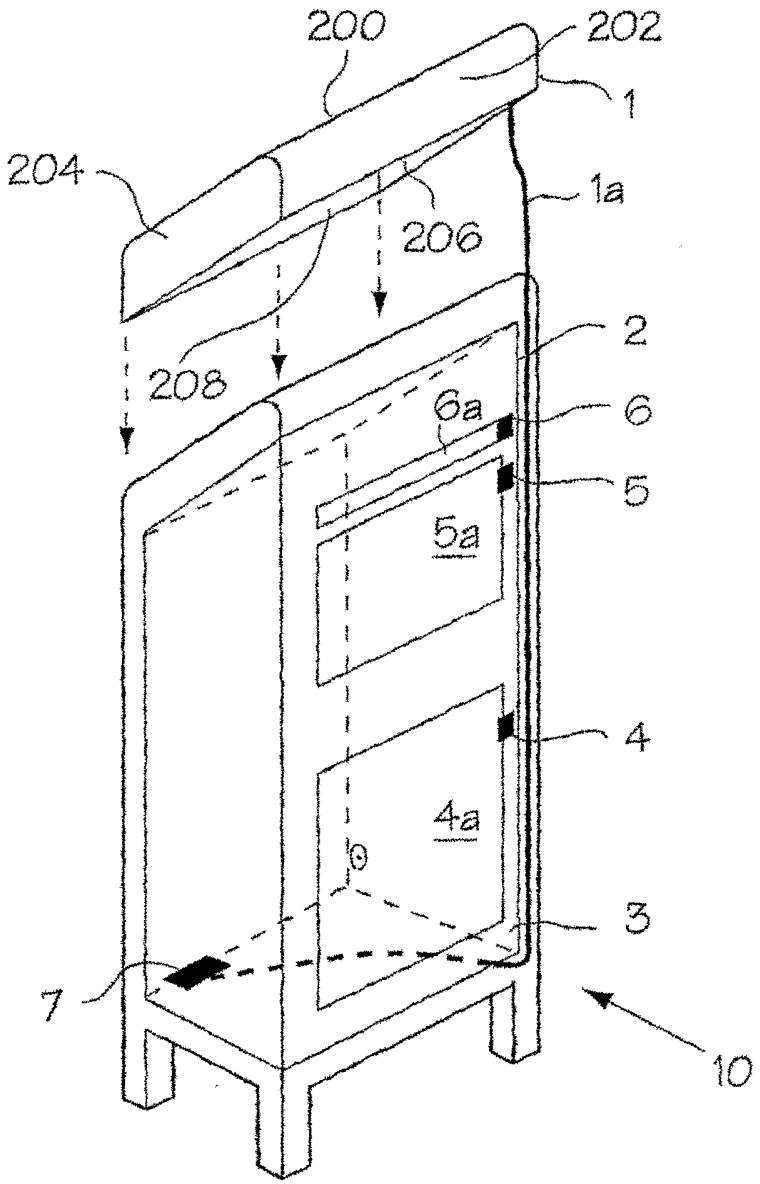


FIG. 1

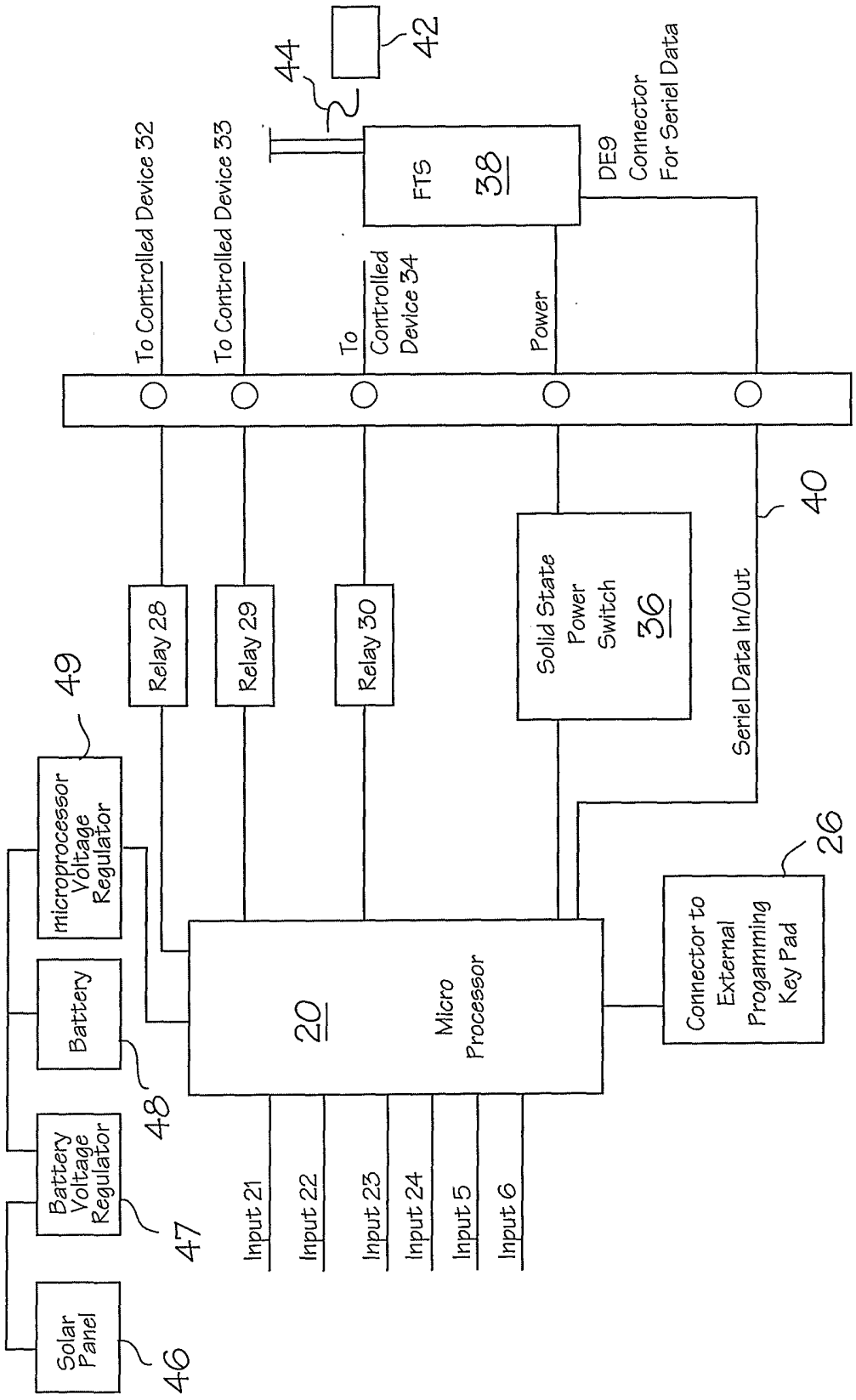
To Controlled Device 32
To Controlled Device 33
To Controlled Device 34
Power
FTS 38
DE9 Connector For Seriel Data
44
42
Relay 28
Relay 29
Relay 30
Solid State Power Switch 36
Seriel Data In/Out
40
49
microprocessor Voltage Regulator
Battery
48
Battery Voltage Regulator
47
Solar Panel
46
20
Micro Processor
Input 21
Input 22
Input 23
Input 24
Input 5
Input 6
Connector to External Progamming Key Pad
26

FIG. 2

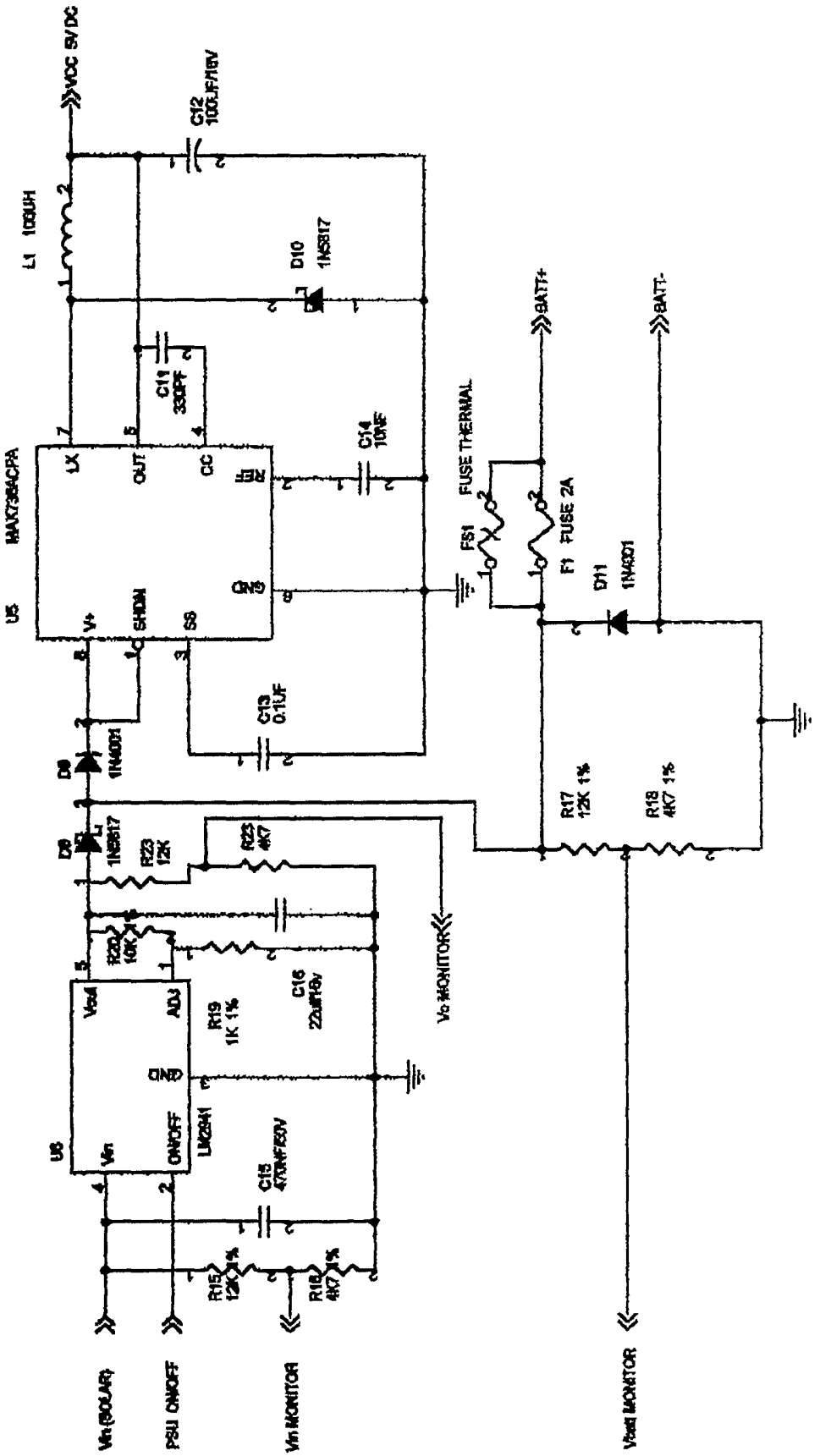
VCC 5V DC
C12 100UF/16V
L1 100UH
D10 1N5817
C11 330PF
C14 10NF
U5 MAX756ACPA
LX
OUT
CC
REF
GND
SHDN
SS
V+
C13 0.1UF
D8 1N4001
D9 1N5817
R23 12K
R23 4K7
R20 10K
Vout
ADJ
GND
ON/OFF
Vin
U6 LM2941
R19 1K 1%
C16 22uF/16v
C15 470uF/50V
R15 12K 1%
R16 4K7 1%
Vo MONITOR
FUSE THERMAL
FS1
F1 FUSE 2A
D11 1N4001
BATT+
BATT-
R17 12K 1%
R18 4K7 1%
Vin (SOLAR)
PSU ON/OFF
Vin MONITOR
Vout MONITOR

FIG. 3

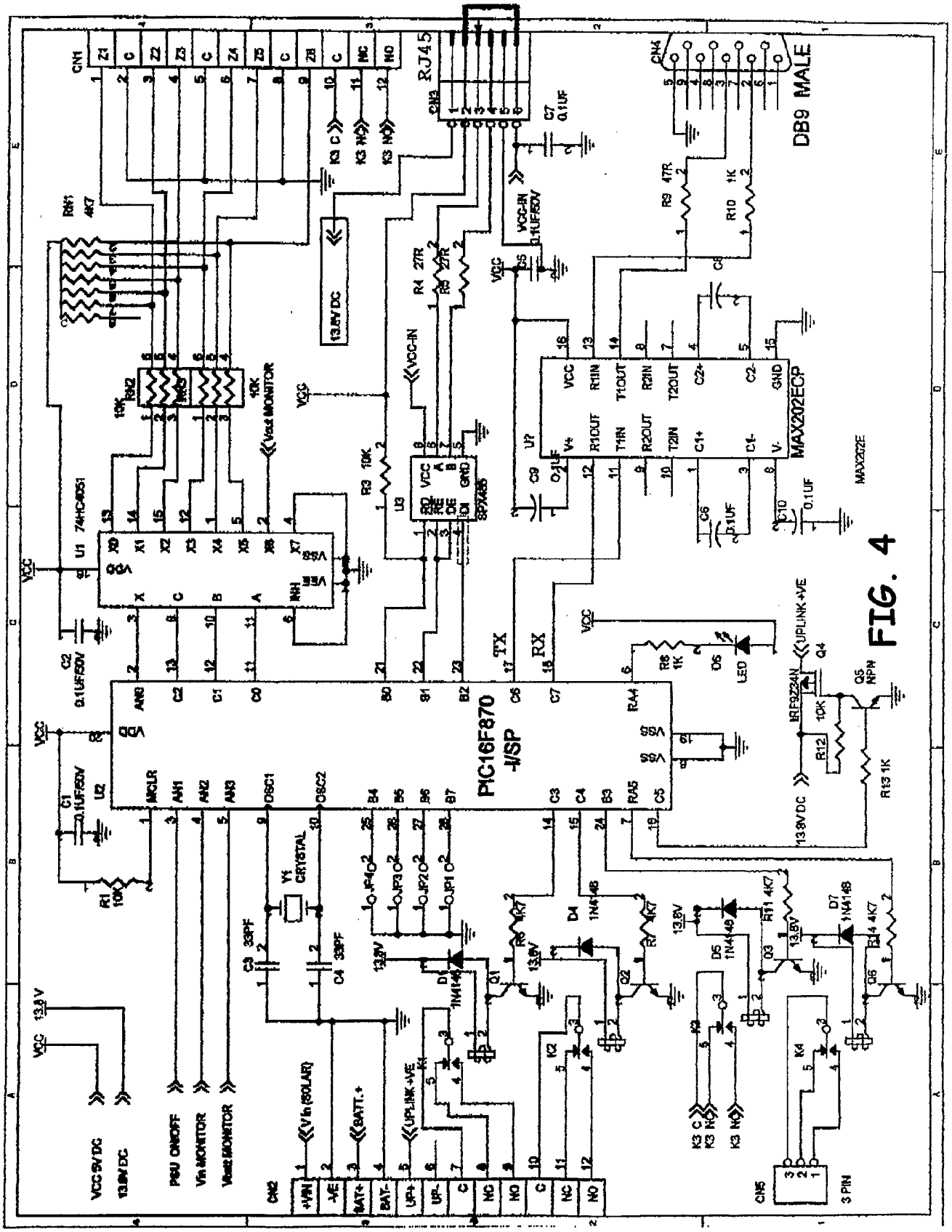
RJ45
DB9 MALE
MAX202ECP
PIC16F870
-I/SP
74HC4051
SPX485
CRYSTAL
LED
3 PIN
VCC 5V DC
13.8V DC
PSU ON/OFF
Vin MONITOR
Vout MONITOR
Vin (SOLAR)
BATT.+
UPLINK +VE
TX
RX

FIG. 4

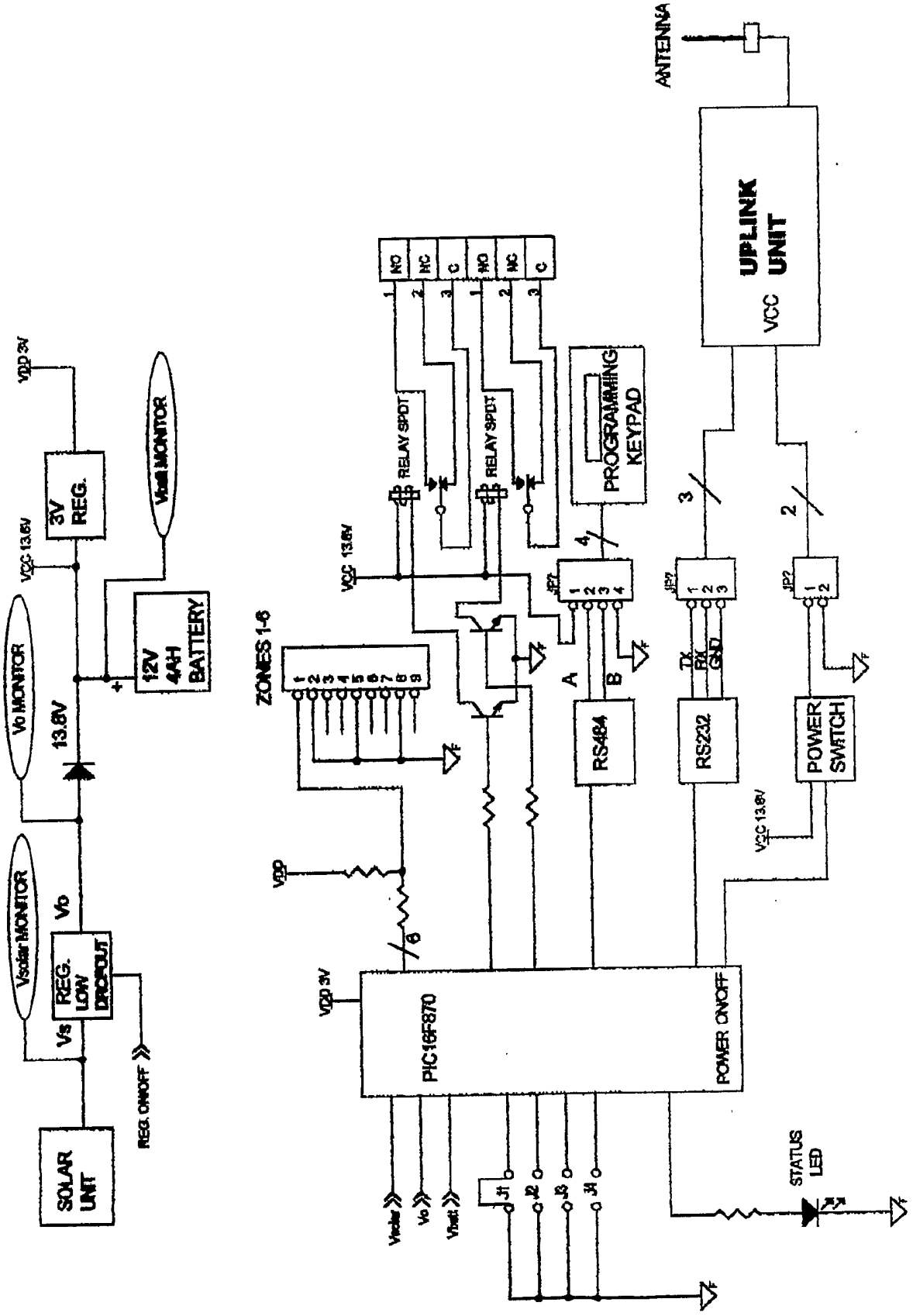
ANTENNA
UPLINK UNIT
VCC
PROGRAMMING KEYPAD
RELAY SPDT
RELAY SPDT
NO
NC
C
ZONES 1-6
RS485
RS232
POWER SWITCH
PIC16F870
POWER ON/OFF
STATUS LED
VDD 3V
VCC 13.8V
3V REG.
12V 4AH BATTERY
Vbatt MONITOR
Vo MONITOR
Vsolar MONITOR
13.8V
REG. LOW DROPOUT
REG. ON/OFF
SOLAR UNIT
Vs
Vo
TX
RX
GND
A
B

FIG. 5

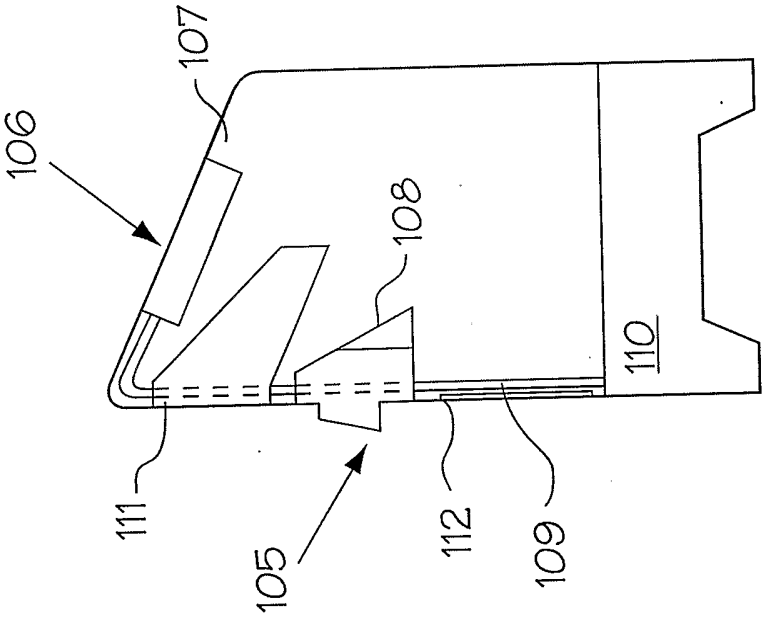


FIG. 7

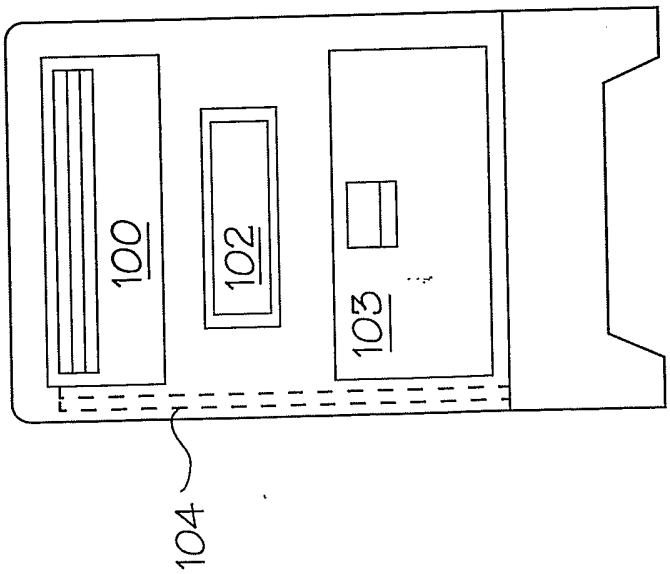


FIG. 6

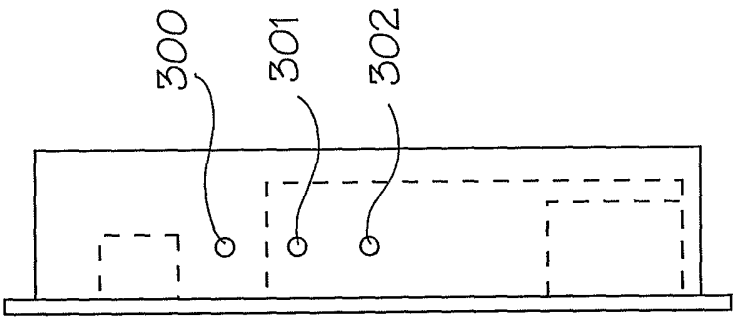
300
301
302

FIG. 9

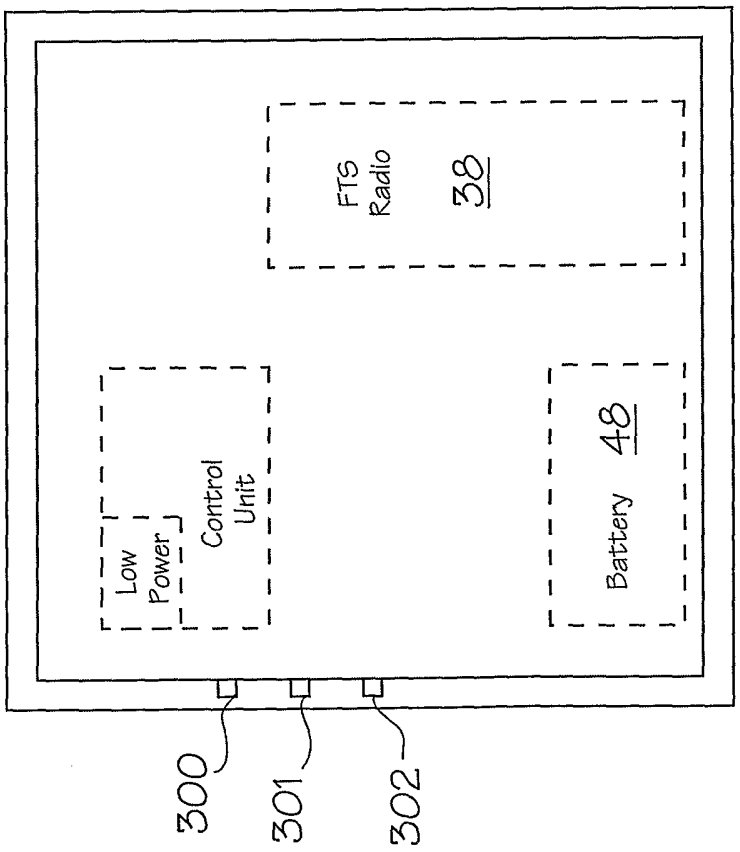
Low Power
Control Unit
FTS Radio
38
Battery
48
300
301
302

FIG. 8

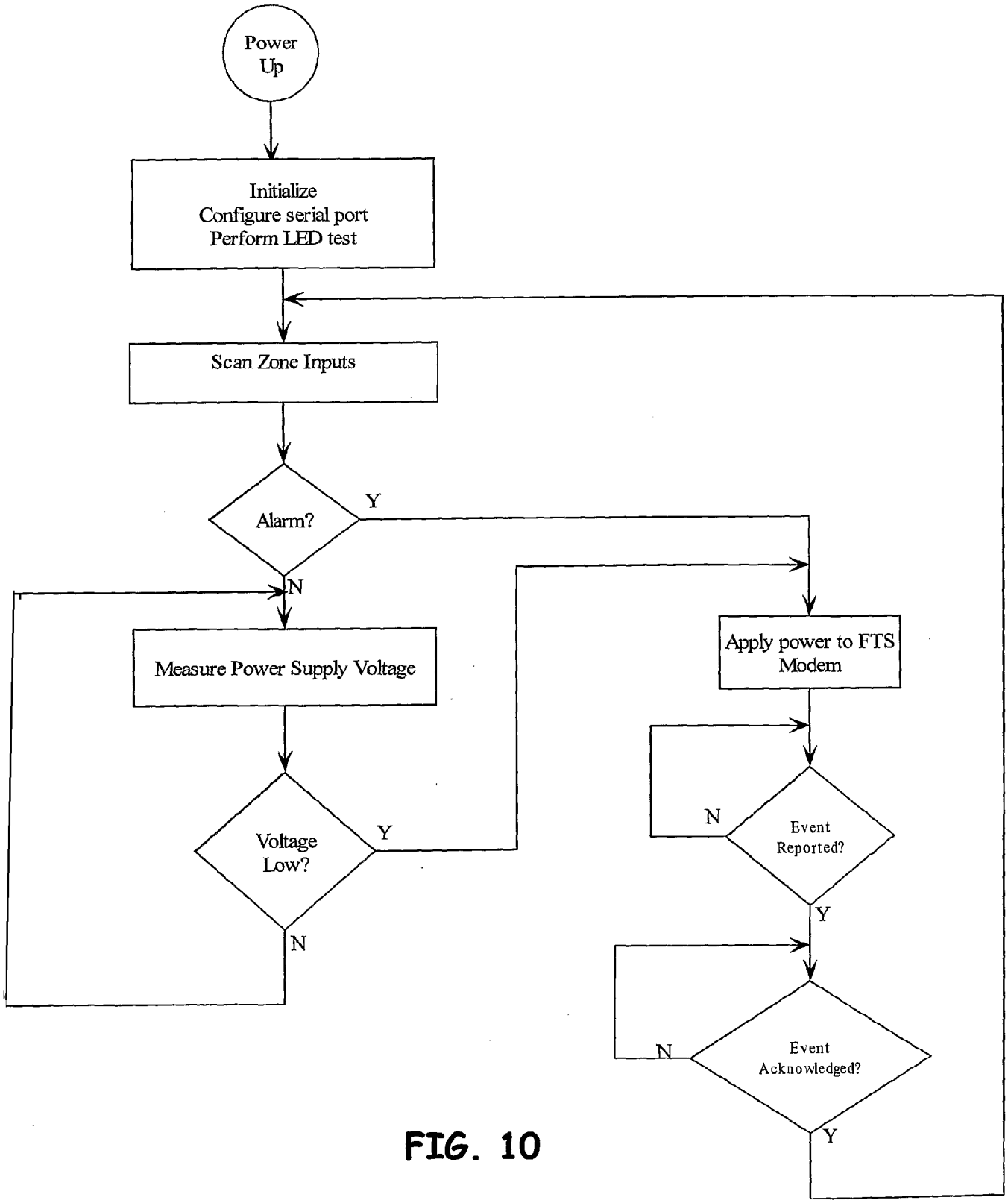
Power Up
Initialize
Configure serial port
Perform LED test
Scan Zone Inputs
Alarm?
Y
N
Measure Power Supply Voltage
Voltage Low?
Y
N
Apply power to FTS Modem
Event Reported?
N
Y
Event Acknowledged?
N
Y

FIG. 10

# INTERNATIONAL SEARCH REPORT

International application No.
PCT/CA2005/000629

A. CLASSIFICATION OF SUBJECT MATTER
IPC(7): G08B 23/00, A47G 29/12

According to International Patent Classification (IPC) or to both national classification and IPC

B. FIELDS SEARCHED

Minimum documentation searched (classification system followed by classification symbols)
IPC(7): G08B 23/00, A47G 29/12, A47G 29/122, A47G 29/124, A47G 29/14, A47G 29/16, A47G 29/20 and keywords
ECLA: A47G29/12R, 12R2, 12R2E, 12R2E2 US Classes: 350/568.1, 569, 232/17, 31, 32, 37

Documentation searched other than minimum documentation to the extent that such documents are included in the fields searched

Electronic database(s) consulted during the international search (name of database(s) and, where practicable, search terms used)
Delphion, Esp@cenet, Canadian Patent Database, USPTO
keywords: standby, low <near> power, sleep <near> mode, mailbox, GPS, solar, theft, alarm

C. DOCUMENTS CONSIDERED TO BE RELEVANT

| Category* | Citation of document, with indication, where appropriate, of the relevant passages | Relevant to claim No. |
|---|---|---|
| Y | US 5 917 411 (Baggarly) June 29, 1999 (29-06-1999) the whole document | 1-12 |
| Y | US 6 483 433 B2 (Moskowitz et al.) Nov. 19, 2002 (19-11-2002) the whole document | 1-12 |
| Y | US 5 818 336 (Varga et al.) Oct. 6, 1998 (06-10-1998) column 7, lines 3 to 5 and figure 8 | 7, 12 |
| A | WO 00/76378 A2 (Holtkamp et al.) Dec. 21, 2000 (21-12-2000) the whole document | 1-12 |
| A | WO 97/43935 A1 (Lateo) Nov. 27, 1997 (27-11-1997) the whole document | 1-12 |

[ ] Further documents are listed in the continuation of Box C.

[X] See patent family annex.

* Special categories of cited documents :

"A" document defining the general state of the art which is not considered to be of particular relevance

"E" earlier application or patent but published on or after the international filing date

"L" document which may throw doubts on priority claim(s) or which is cited to establish the publication date of another citation or other special reason (as specified)

"O" document referring to an oral disclosure, use, exhibition or other means

"P" document published prior to the international filing date but later than the priority date claimed

"T" later document published after the international filing date or priority date and not in conflict with the application but cited to understand the principle or theory underlying the invention

"X" document of particular relevance; the claimed invention cannot be considered novel or cannot be considered to involve an inventive step when the document is taken alone

"Y" document of particular relevance; the claimed invention cannot be considered to involve an inventive step when the document is combined with one or more other such documents, such combination being obvious to a person skilled in the art

"&" document member of the same patent family

| Date of the actual completion of the international search | Date of mailing of the international search report |
|---|---|
| 7 June 2005 (07-06-2005) | 22 July 2005 (22-07-2005) |

| Name and mailing address of the ISA/CA | Authorized officer |
|---|---|
| Canadian Intellectual Property Office<br>Place du Portage I, C114 - 1st Floor, Box PCT<br>50 Victoria Street<br>Gatineau, Quebec K1A 0C9<br>Facsimile No.: 001(819)953-2476 | Eric Lafontaine (819) 956-9965 |

# INTERNATIONAL SEARCH REPORT

Information on patent family members

International application No.
PCT/CA2005/000629

| Patent Document Cited in Search Report | Publication Date | Patent Family Member(s) | Publication Date |
|---|---|---|---|
| US5917411 | 29-06-1999 | US5917411 A | 29-06-1999 |
| US6483433 | 19-11-2002 | US6483433 B2 | 19-11-2002 |
| US5818336 | 06-10-1998 | AU1523697 A<br>US5818336 A<br>WO9725694 A1 | 01-08-1997<br>06-10-1998<br>17-07-1997 |
| WO0076378 | 21-12-2000 | AU5618000 A<br>EP1191869 A2<br>WO0076378 A2 | 02-01-2001<br>03-04-2002<br>21-12-2000 |
| WO9743935 | 27-11-1997 | AU2757297 A<br>AUPO001696D D0<br>WO9743935 A1 | 09-12-1997<br>13-06-1996<br>27-11-1997 |