US 20050102866A1

(19) United States

(12) Patent Application Publication

(10) Pub. No.: US 2005/0102866 A1

(43) Pub. Date: May 19, 2005

Sewell et al.

(54) MULTI-FUNCTION WORK MACHINE

(76) Inventors: **Cody L. Sewell**, Perry, OK (US); **Michael T. Lumbers**, Perry, OK (US); **H. Stanley Mullins**, Perry, OK (US); **Kelvin P. Self**, Stillwater, OK (US)

Correspondence Address:
MCKINNEY & STRINGER, P.C.
101 N. ROBINSON
OKLAHOMA CITY, OK 73102 (US)

(21) Appl. No.: **10/958,183**

(22) Filed: **Oct. 4, 2004**

Related U.S. Application Data

(60) Provisional application No. 60/508,339, filed on Oct. 3, 2003.

Publication Classification

(51) **Int. Cl.**[7] **E02F 3/64**

(52) **U.S. Cl.** **37/411**

(57) **ABSTRACT**

A work machine having a first work member and a second work member, both operated from a pivotal control station. In a preferred embodiment the work machine has a backhoe assembly and a loader assembly both supported on a frame and operable from the pivotal control station. The work machine may have left and right low-profile drive systems that allow the first work member to perform work outside and parallel to the longitudinal center axis of the work machine. The work machine has a low-profile power source and operator platform that allow unobstructed visibility of the first and second work members from the control station.

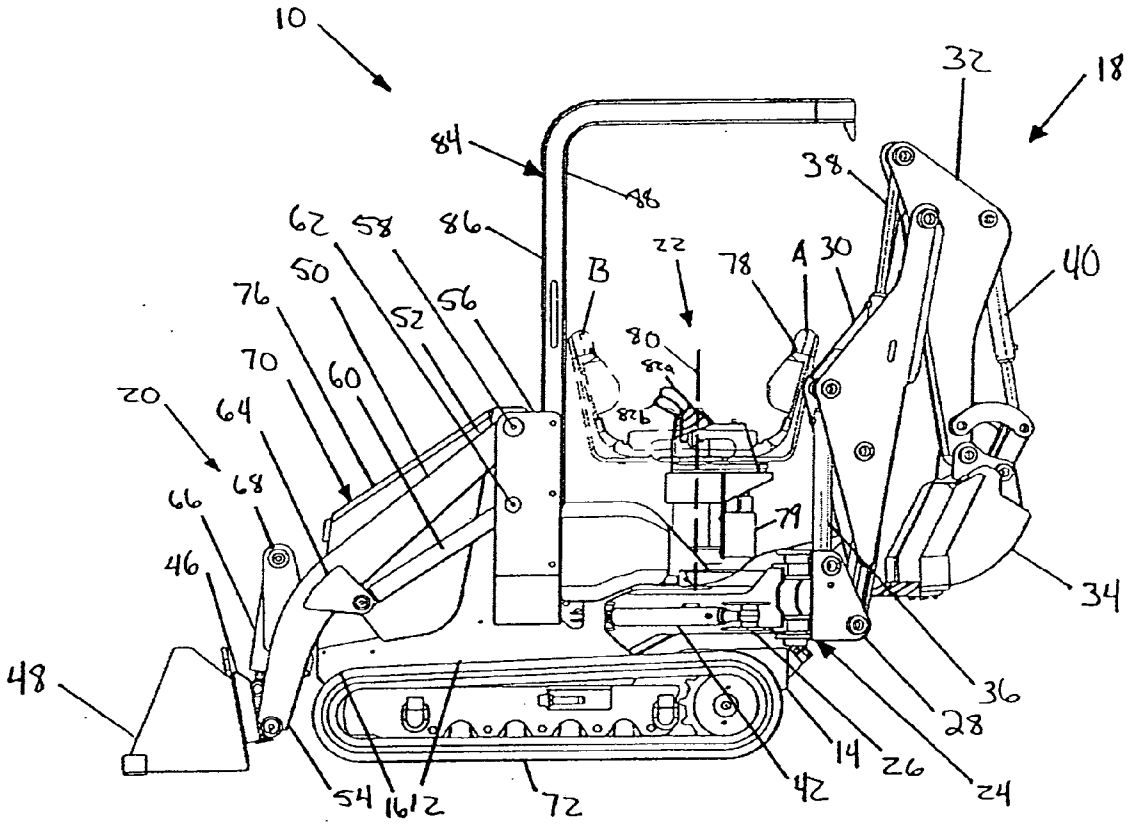

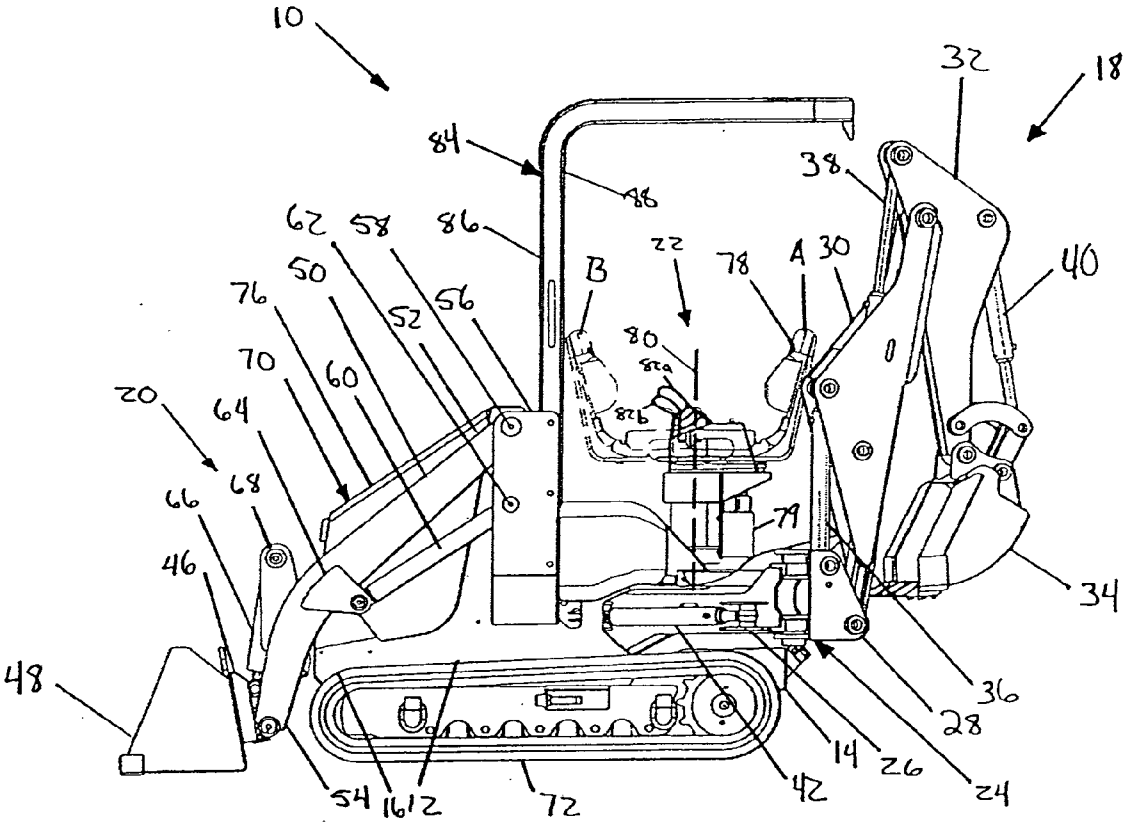
10
18
32
84
86
38
40
62
58
86
22
78
A
30
B
50
76
52
56
80
70
60
20
64
68
66
46
48
34
36
28
26
24
14
42
54
16
12
72

FIG. 1

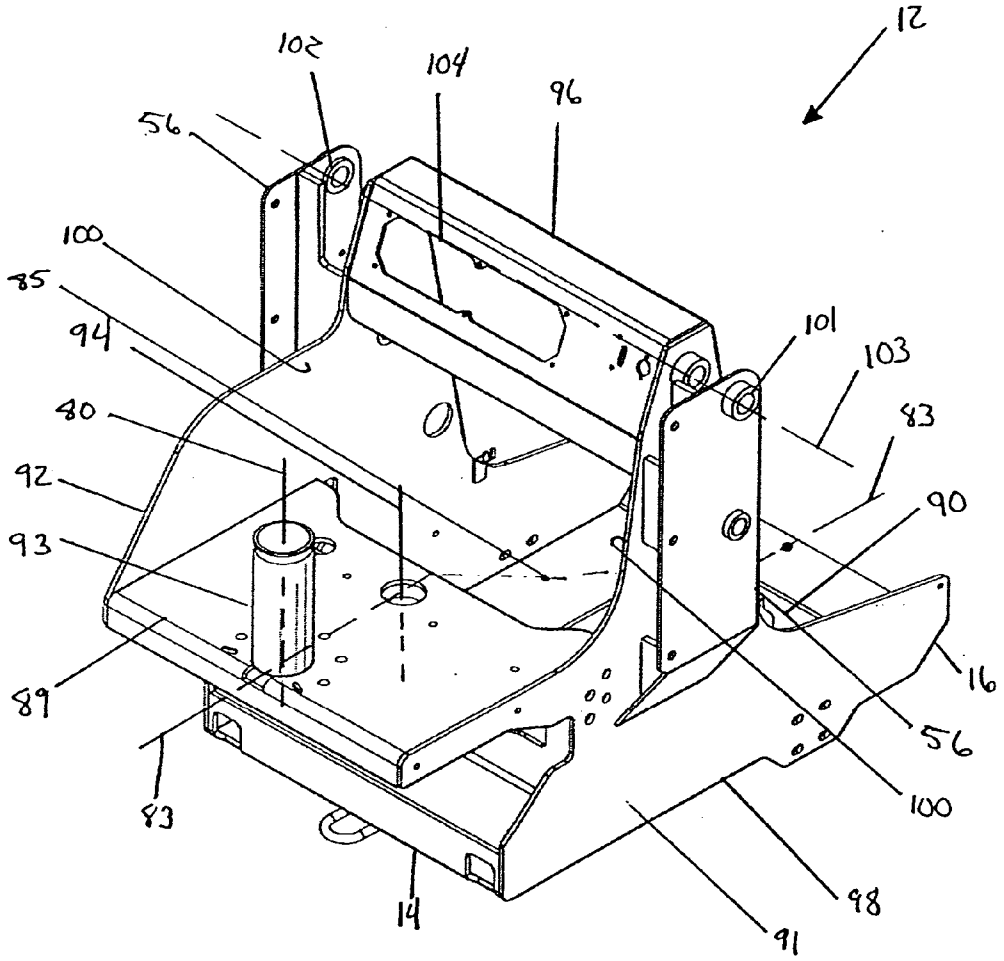
12
102
104
96
56
100
85
94
101
103
83
80
92
90
93
16
89
56
100
83
98
14
91

FIG. 2

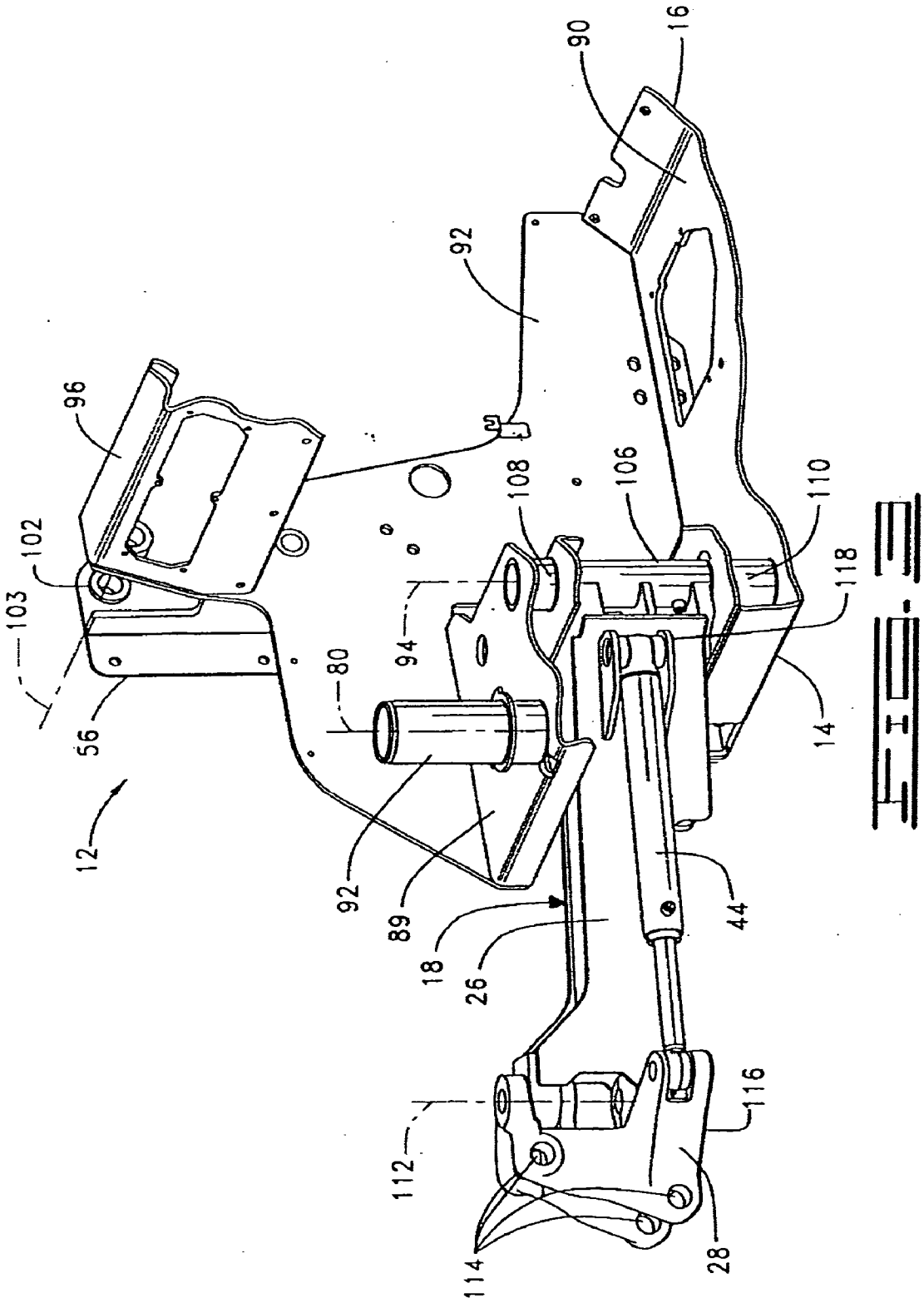
12
56
103
102
96
92
80
94
108
106
110
118
14
16
90
92
89
18
26
44
112
114
116
28

FIG. 3

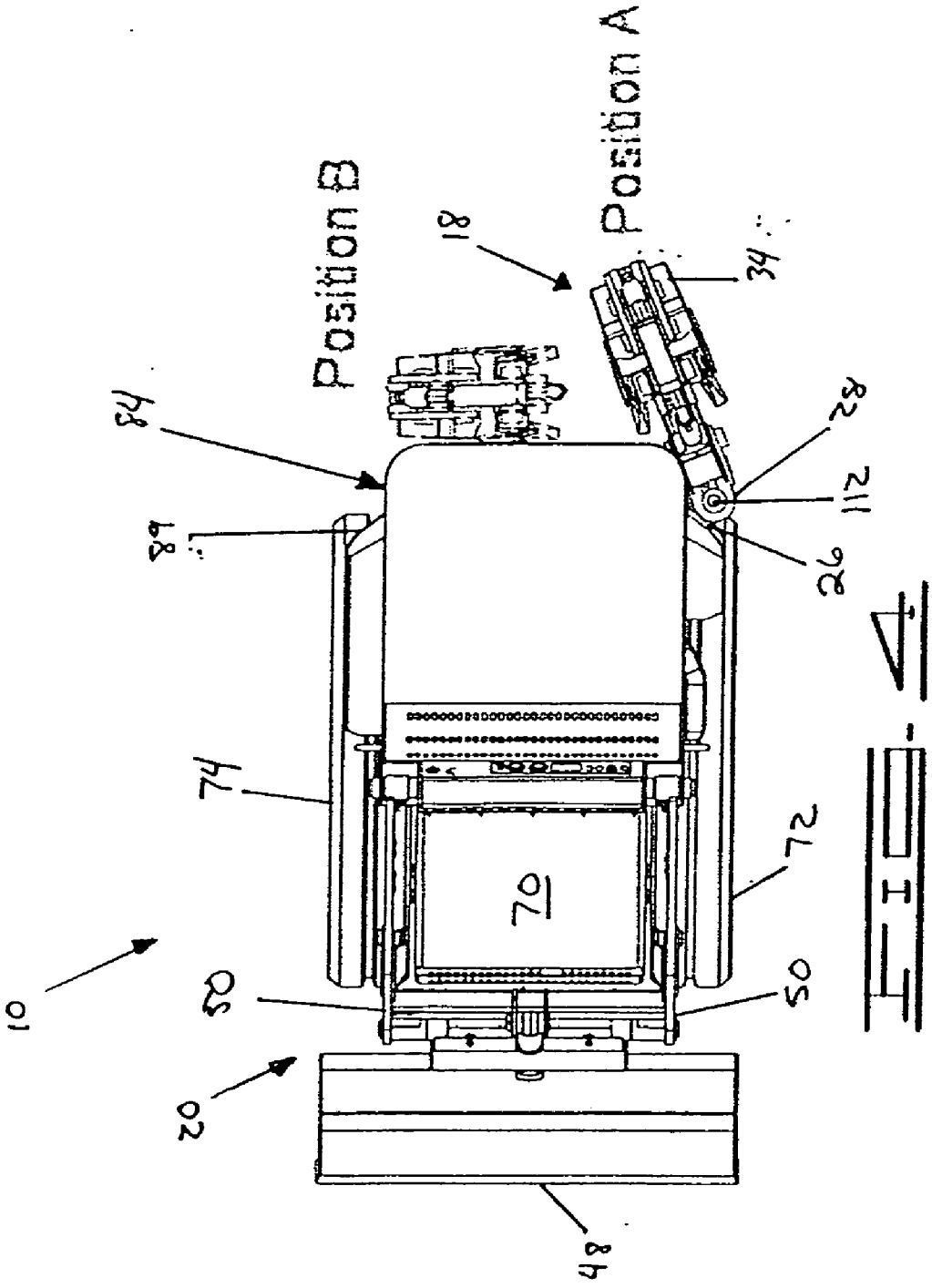

FIG. 4

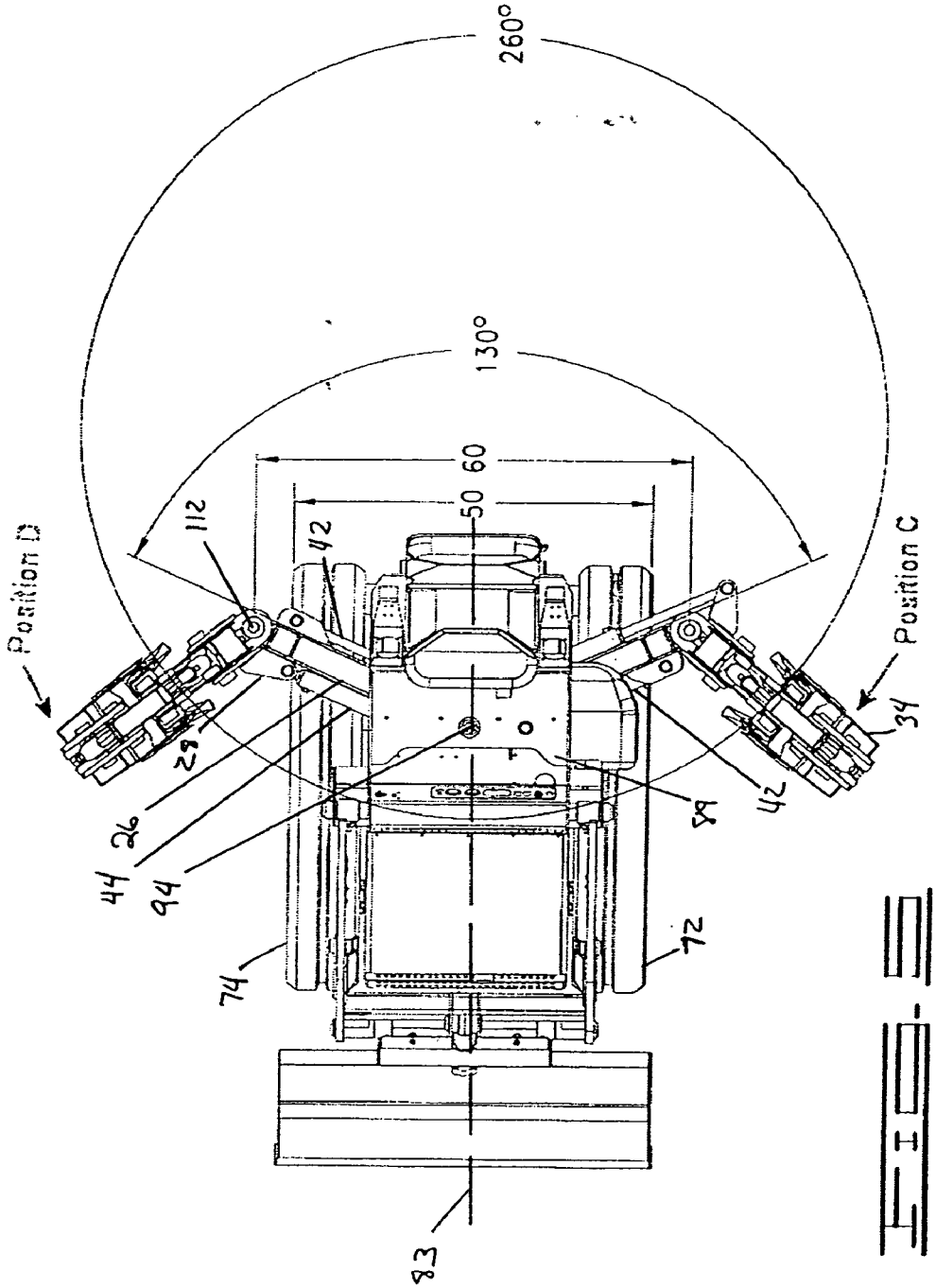
260°
130°
60
50
Position D
Position C
112
42
29
26
44
94
74
83
89
42
34
72

FIG. 5

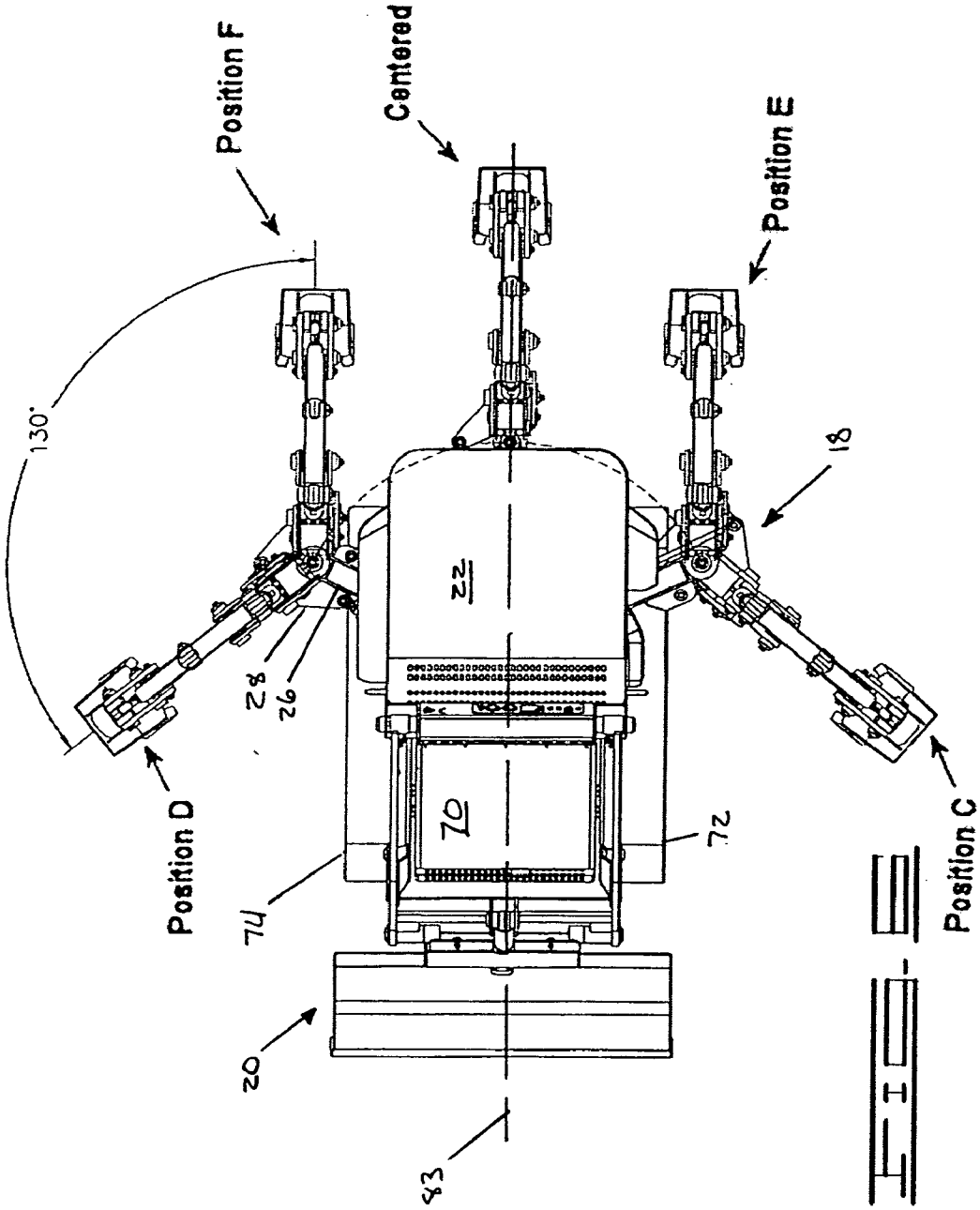
Position F
Centered
Position E
130°
18
22
28
26
Position D
70
72
74
Position C
20
43

FIG. 1

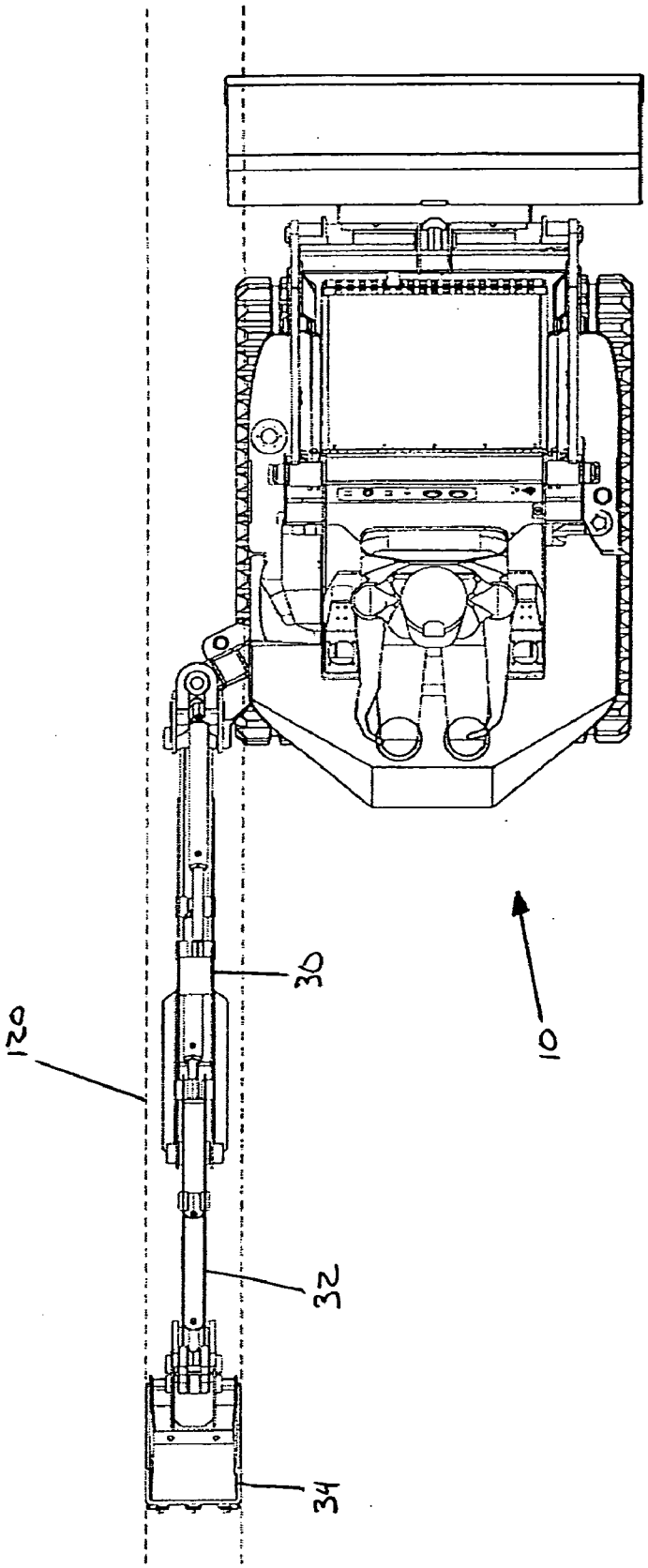

FIG. 7

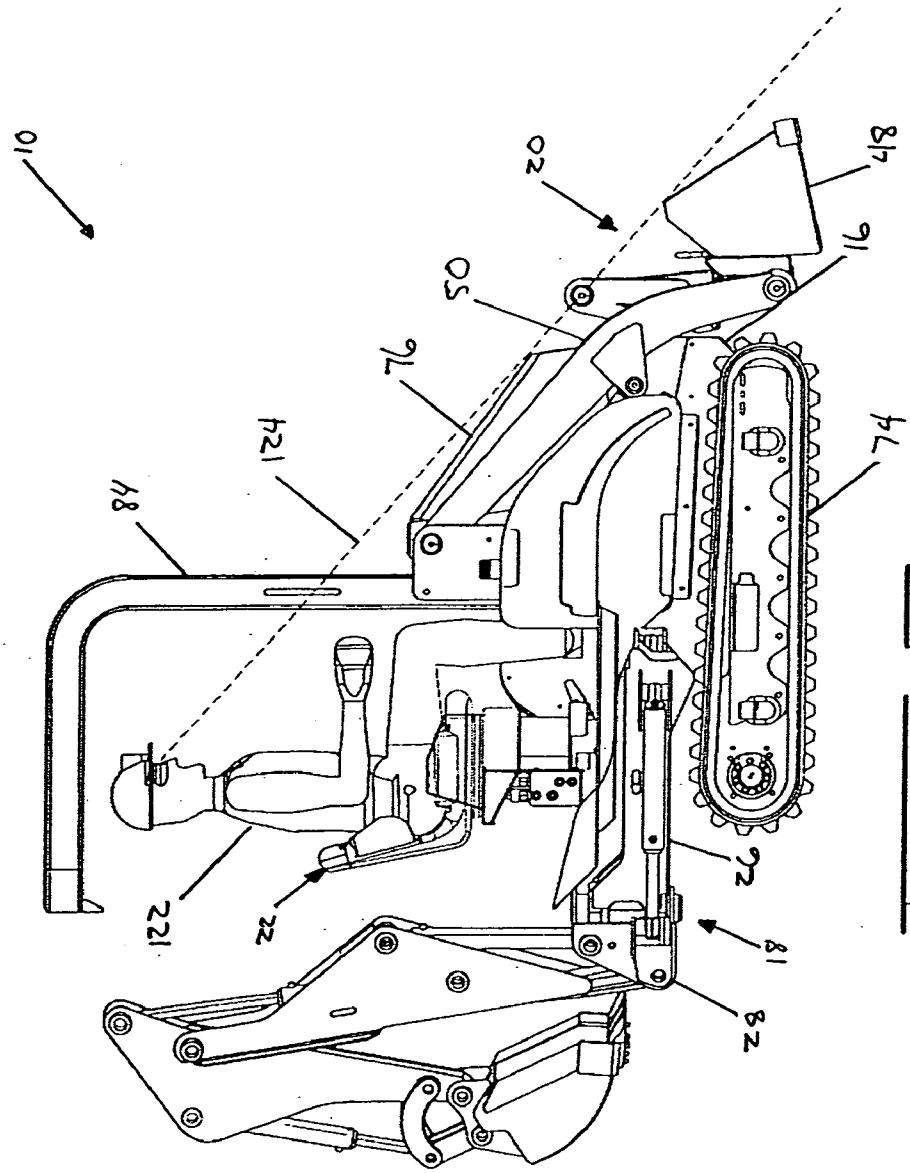

FIG. 11

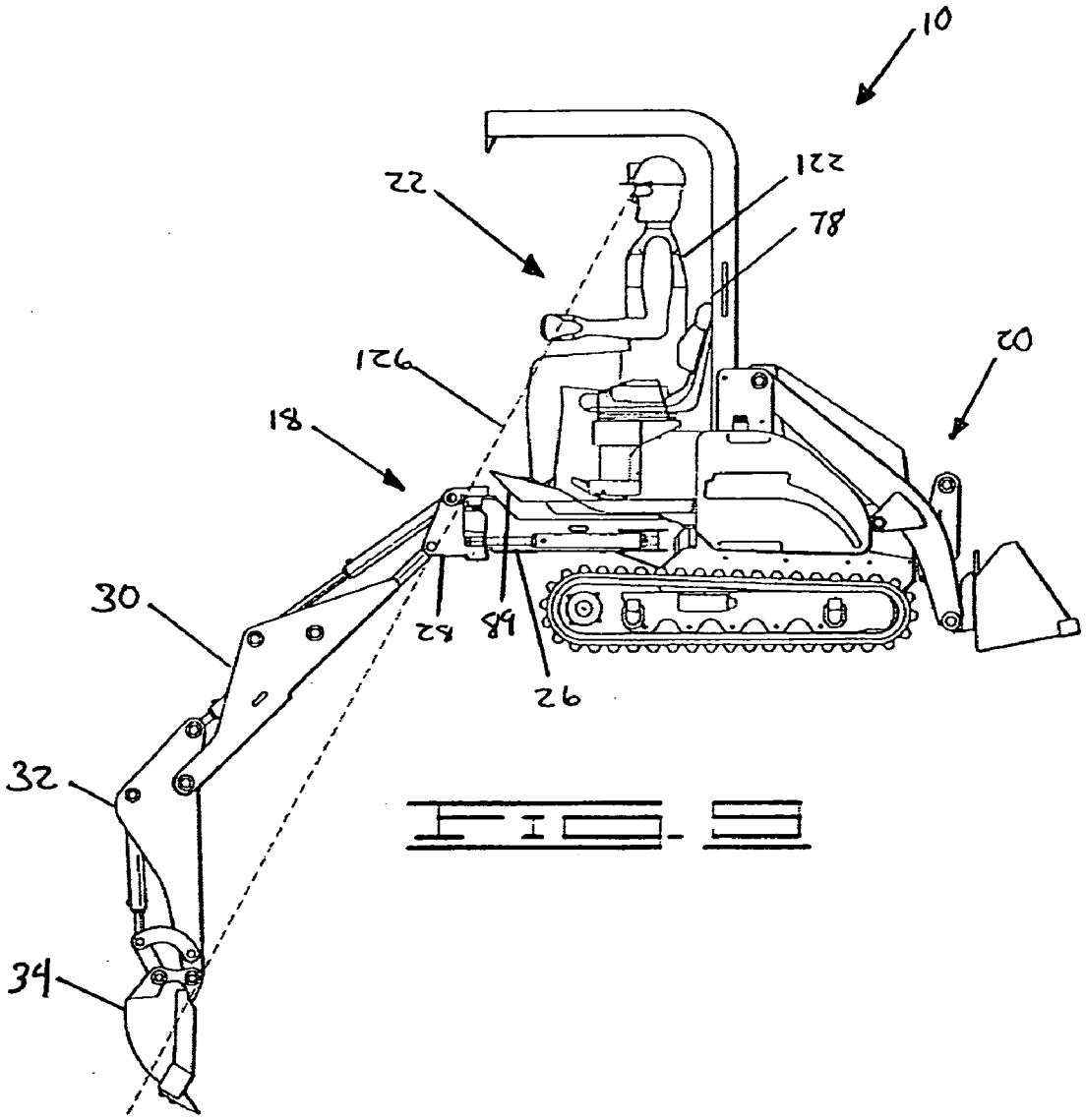

FIG. 5

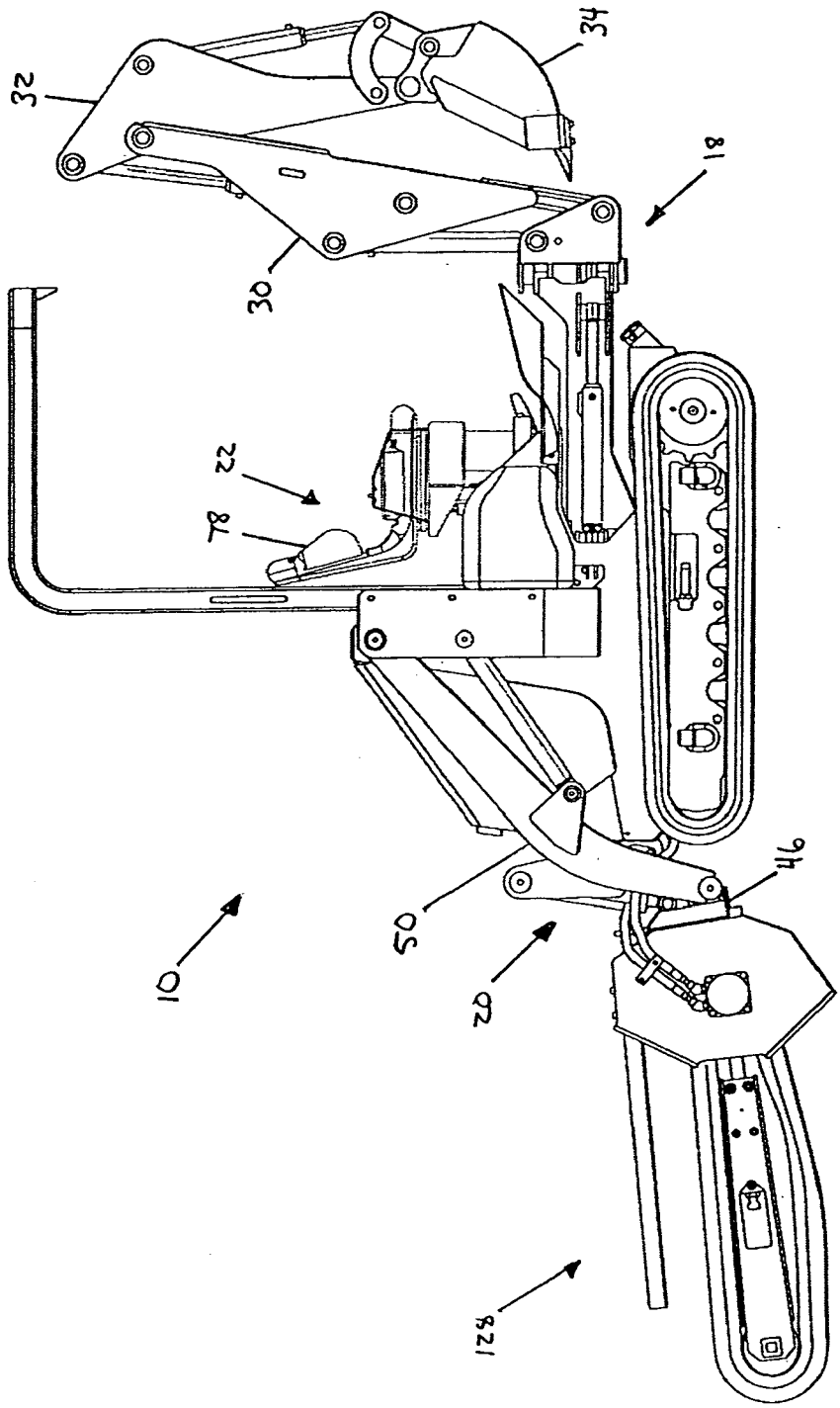

FIG. 11

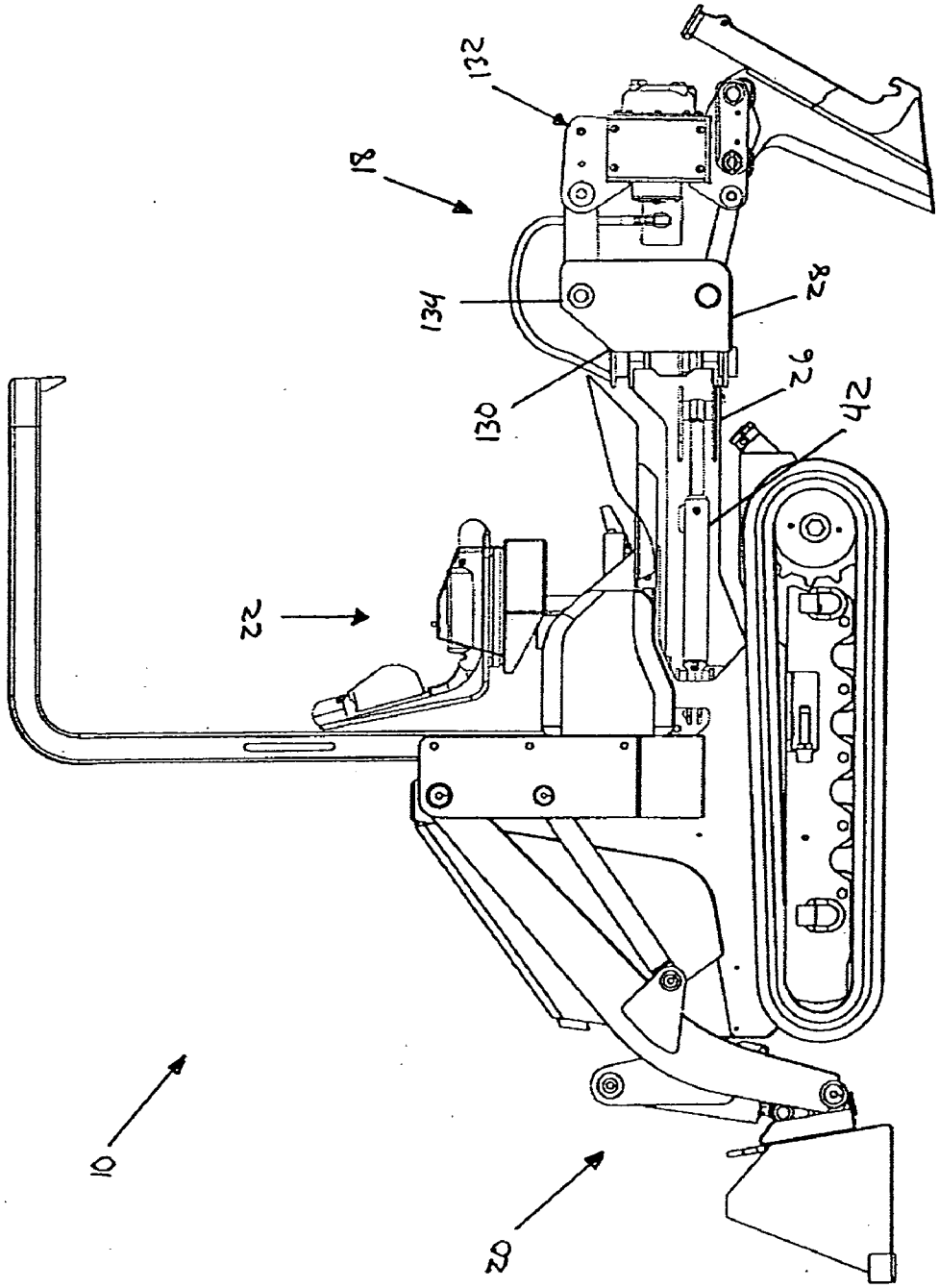

FIG. 11

8.A

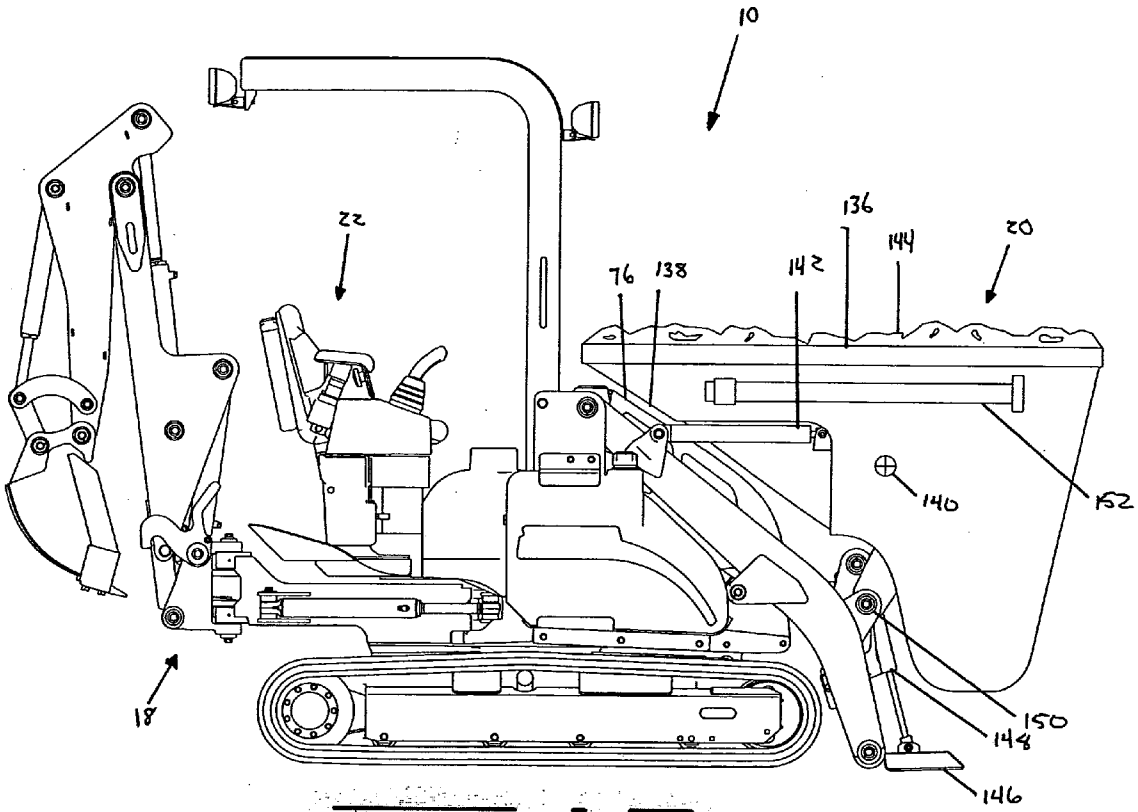

FIG. 12

MULTI-FUNCTION WORK MACHINE

CROSS REFERENCE TO RELATED APPLICATION

[0001] This application claims the benefit of U.S. Provisional Application No. 60/508,339 filed Oct. 3, 2003, the contents of which are incorporated fully herein by reference.

FIELD OF THE INVENTION

[0002] The present invention relates generally to multi-function work machines, and in particular to a compact multi-function work machine adapted to accept alternative work tools.

SUMMARY OF THE INVENTION

[0003] The present invention is directed to work machine comprising a frame, a first work member, a second work member, and a pivotal control station. The frame has a first end and a second end. The first work member is supported by the frame so that the first work member is operable at the first end of the frame. The second work member is supported by the frame so that the second work member is operable at the second end of the frame. The pivotal control station is supported by the frame and movable between at least a first position and a second position. The pivotal work station is adapted to control the first work member when in the first position and to control the second work member when in the second position.

[0004] The present invention further comprises an excavator. The excavator comprises a frame having a first end and a second end, a control station, a low-profile power source supported by the frame, and a control station also supported by the frame. A first work member is supported by the frame so that the first work member is operable at the first end of the frame and operated by the control station. A second work member is supported by the frame so that the second work member is operable at the second end of the frame and operated by the control station. The second work member comprises a lift arm and a work tool. The lift arm has a first end and a second end. The first end of the lift arm is pivotally connected to the frame. The second end of the lift arm is movable in a range of motion comprising a lower position and an upper position. The work tool is supported by the second end of the lift arm. The excavator further comprises a first unobstructed line of sight and a second unobstructed line of sight. The first unobstructed line of sight extends from the control station over the low-profile power source to the work tool when the second end of the lift arm is in the lower position. The second unobstructed line of sight extends from the control station to beyond the work tool when the second end of the lift arm is in the upper position.

[0005] The present invention further includes an excavator that comprises a frame, a low-profile left drive system and a low-profile right drive system. The low-profile left drive system and the low-profile right drive system are both supported by the frame and used to propel the frame in a plurality of directions. The excavator further comprises a first work member and a second work member. The first work member is supported by the frame so that the first work member is operable at the first end of the frame. The first work member comprises a swing arm, a swing post, a swing post actuator, and a swing arm actuator. The swing arm is pivotally connected to the frame and has a central longitudinal axis. The swing post is pivotally connected to the swing arm. The swing arm actuator is fixed to the frame and adapted to pivot the swing arm and swing post relative to the frame to a plurality of positions. The plurality positions includes at least one position placing the swing post beyond the left drive system and at least one position placing the swing post beyond the right drive system. The swing post actuator is fixed to the swing arm and adapted to impart a pivot motion to the swing post relative to the swing arm to either side of the central longitudinal axis of the swing arm such that the pivot motion of the swing post is not restricted by the position of the swing arm. The second work member is supported by the frame so that the second work member is operable at the second end of the frame.

[0006] Further still, the present invention includes a work machine comprising a frame, a pivotal control station, a pivotal first work member and a pivotal second work member. The frame has a first end, a second end and a longitudinal axis comprising a midpoint. The pivotal control station is supported by the frame and has a substantially vertical pivot axis disposed near the midpoint of the longitudinal axis. The pivotal first work member is supported by the frame and has a substantially vertical pivot axis disposed near the midpoint of the longitudinal axis of the frame. The pivotal second work member is supported by the frame and has a substantially horizontal pivot axis.

[0007] The present invention further includes an excavator comprising a frame having a first end and a second end, a pivotal control station supported by the frame, a first work member, and a second work member. The first work member is supported by the frame so that the first work member is operable at the first end of the frame. The first work member comprises a swing arm pivotally connected to the frame, a swing post pivotally connected to the swing arm, and a work tool supported by the swing post. The second work member is supported by the frame so that the second work member is operable at the second end of the frame. The excavator further includes an unobstructed line of sight extending from the control station to the work tool of the first work member.

[0008] Further still, the present invention includes, a work machine comprising a frame having a first end and a second end, a pivotal control station, a pivotal first work member, and a pivotal second work member. The control station is supported by the frame and has a substantially vertical pivot axis. The pivotal first work member is supported by the frame so that the first work member is operable at the first end of the frame. Further, the first work member comprises a substantially vertical pivot axis. The pivotal second work member is supported by the frame so that the second work member is operable at the second end of the frame and comprises a substantially horizontal pivot axis. The pivot axis of the control station, the pivot axis of the first work member, and the pivot axis of the second work member are disposed in relation to the frame to create a close-coupled work machine.

BRIEF DESCRIPTION OF THE DRAWINGS

[0009] **FIG. 1** is a side elevational view of a multi-function work machine. The work machine has a first work member and a second work member both shown supported

on a frame. The machine of **FIG. 1** is equipped with a pivotal control station from which the first and second work members may be operated.

[**0010**] **FIG. 2** is a perspective view of the frame of the work machine shown in **FIG. 1**. **FIG. 2** illustrates positioning of the pivotal axes of the work members and the control station.

[**0011**] **FIG. 3** is a perspective cut-away view of the frame of **FIG. 2**. **FIG. 3** shows the attachment of the first work member to the frame. The first work member shown in **FIG. 3** has a swing arm and a swing post used to support and move a work tool attached to the swing post.

[**0012**] **FIG. 4** is a top view of the work machine of **FIG. 1** illustrating alternate stowing positions of the excavator bucket.

[**0013**] **FIG. 5** is a top view of the work machine of **FIG. 4** having the roll-over protection canopy removed so that the operator's seat is visible. **FIG. 5** illustrates the range of motion of the swing arm shown in **FIG. 3**.

[**0014**] **FIG. 6** is a top view of the work machine of **FIG. 5** illustrating the range of motion of the work tool when used with the swing arm and swing post of the present invention.

[**0015**] **FIG. 7** is a top view of the work machine illustrating the use of the excavator bucket to dig a trench.

[**0016**] **FIG. 8** is a side view of the work machine of **FIG. 1** illustrating an unobstructed line of sight from the control station to the work tool.

[**0017**] **FIG. 9** is a side view of the work machine of **FIG. 1** illustrating an unobstructed line-of-sight from the control station to an excavator bucket positioned below ground.

[**0018**] **FIG. 10** is a side view of the work machine illustrating a trencher as a work tool supported by the frame.

[**0019**] **FIG. 11** is a side view of the work machine of the present invention having an offsetable vibratory plow as an alternate work tool supported by the frame.

[**0020**] **FIG. 12** is a side view of the work machine having an alternative configuration. The work machine of **FIG. 12** has a "dump bed" attached to the work member.

DESCRIPTION

[**0021**] Turning now to the figures and first to **FIG. 1**, there is shown therein a work machine **10** of the present invention. The work machine **10** shown in **FIG. 1** is an excavator that, among other things, may be used to dig trenches and move earth. The work machine **10** comprises a frame **12** having a first end **14** and a second end **16**. The frame **12** supports a first work member **18** and a second work member **20**. The first work member **18** is supported by the frame **12** so that it is operable at the first end **14** of the frame. The second work member **20** is supported by the frame **12** so that it is operable at the second end **16** of the frame. The work machine **10** of **FIG. 1** further includes a control station **22** supported by the frame **12**. The control station **22** is movable between a first position A and a second position B. When placed in position B the control station **22** controls the function of the first work member **18**. The second work member **20** is controlled by the control station **22** when the control station is in position A.

[**0022**] The first work member **18** may comprise a tool carrier **24**. The tool carrier **24** may comprise a swing arm **26** connected to the frame **12**, a swing post **28** connected to the swing arm, and a work tool connected to the swing post. For purposes of illustration, the work tool of **FIG. 1** is a backhoe attachment used to dig trenches. The backhoe comprises a boom **30**, a dipper **32**, and an excavator bucket **34**. The boom **30**, dipper **32** and bucket **34** are pivotally connected in series and positioned or moved with respect to each other using hydraulic cylinders **36**, **38**, and **40**. The backhoe attachment is moved and positioned relative to the frame **12** by moving the swing arm **26** and swing post **28**. The swing arm **26** may have a swing arm actuator **42** comprising a hydraulic cylinder that is adapted to pivot the swing arm and the swing post **28** relative to the frame **12** to a plurality of positions. A swing post actuator **44** (**FIG. 3**) may be fixed to the swing arm **26** and adapted to impart pivot motion to the swing post **28** relative to the swing arm **26**.

[**0023**] The second work member **20** may comprise a tool carrier **46**. The tool carrier **46** may be constructed to support a variety of alternative work tools. For illustrative purposes, the work tool shown attached to the tool carrier **46** in **FIG. 1** is loader bucket **48**. The tool carrier **46** and loader bucket **48** are supported by one or more lift arms **50** having a first end **52** and a second end **54**. Each lift arm **50** is pivotally connected to the second work member support **56** of the frame **12** at pivot point **58**. The second end **54** of the lift arm **50** is movable in a range of motion comprising a lower position (shown in **FIG. 1**) and an upper position. The lift arm **50** may be raised and supported at any position within its range of motion using a lift arm actuator **60**. The lift arm actuator **60** is attached to the second work member support **56** at pivot point **62** and to a bracket **64** supported at the second end **54** of the lift arm.

[**0024**] The tool carrier **46** may comprise a quick-attach mechanism adapted to connect to a wide variety of work tools such as the loader bucket **48** shown in **FIG. 1**. The angular rotational position of the work tool **48** may be adjusted or held at a desired "tilt" ("curl") angle by a tilt cylinder **66** connected to the tool carrier **46** and a tilt cylinder bracket **68** supported by the lift arm **50**. It will be appreciated that the lift arm **50** may be telescopic at its second end **54** for extended reach and lift height of the work tool **48**.

[**0025**] Continuing with **FIG. 1**, the work machine **10** further may comprise a low profile power source **70** supported by the frame **12**. The low-profile power source **70** may comprise an internal combustion engine (not shown) supported within an engine compartment **76**. It will be appreciated, of course, that different type engines or power sources may be used to power the work machine **10**. The power source **70** is adapted to drive operation of the left **72** and right **74** drive systems, and the various hydraulic and electrical systems used with the work machine **10**. The engine compartment **76** of the low-profile drive system **70** is sloped such that a first line-of-sight between the control station **22** and the work tool **48** is unobstructed when the control station is in position A and the work tool is in the lower position shown in **FIG. 1**. However, it will be appreciated that the lift arm **50** may be constructed in such a manner that a second unobstructed line-of-sight extends from the control station **22** to beyond the work tool **48** when the second end **54** of the lift arm **50** is in the upper position (not shown).

[0026] The frame **12** is adapted to support a low-profile left **72** and right **74** (**FIG. 5**) drive system. The low-profile left **72** and right **74** drive systems are both supported by the frame for propelling the frame in a plurality of directions. The drive systems **72** and **74** shown in **FIGS. 1 and 5** comprise an all-terrain endless track system. However, it will be appreciated that the left **72** and right **74** drive systems may each comprise a plurality of low-profile wheels that are capable of being steered in a skid, articulated, coordinated or conventional arrangement without departing from the spirit of the invention.

[0027] Referring still to **FIG. 1**, the pivotal control station **22** is supported by the frame **12** and may comprise an operator seat **78** having a vertical pivot axis **80**. A plurality of controls **82***a* and **82***b* may be supported on the control station **22** and, more specifically, disposed on the operator's seat **78** for rotation therewith. The controls **82***a* and **82***b* are adapted to control operation of both the first work member **18** and the second work member **20**.

[0028] The control station **22** may further comprise a roll-over protection structure ("ROPS") **84** supported by the frame **12**. The ROPS **84** is preferably a front-cantilevered canopy having two vertical posts **86** and **88**. Use of the two-post front-cantilevered canopy ROPS **84** provides improved visibility of both the first work member **18** or the second work member **20** during the operation of each. Alternatively, the ROPS may have three or more vertical posts or other ROPS structure configurations positioned to allow improved visibility.

[0029] The process of switching the on-seat controls **82***a* and **82***b* from functional operation of the first work member **18** to operation of the second work member **20** (or vice versa) will now be described. Switching of operation may be initiated by a function selector switch (not shown). In a first position of the switch, the on-seat controls **82***a* and **82***b* operate a hydraulic circuit powering the above-mentioned drive systems (via a left joystick) while also being available to actuate the movements of the second work member **20** (via the right joystick). In the second position of the function selector switch, the on-seat controls **82***a* and **82***b* operate the movements of the first work member **18**. Actuation of the switch causes a pilot pressure controlled diverter valve (not shown) in each of two control valve sections to switch their operative control to the first work member **18** or to the second work member **20**. Additionally, the switch may cause a seat-mounted valve manifold **79** to shift the operative control of the left control **82***a* between control of the drive systems **72** and **74** and control of certain actions of the first work member **18**. The operative control provided by the controls **82***a* and **82***b* are summarized below.

[0030] In accordance with the present invention, there may be two basic modes of operation of the work machine **10**. Mode 1 involves the second work member **20** and the drive systems **72** and **74**, while Mode 2 applies to the first work member **18**. In operational Mode 1 the left control **82***a* may operate the drive systems **72** and **74** by pilot control of their respective hydrostatic pumps. Forward movement of the left control **82***a* causes the work machine **10** to move forward. Rearward movement of the left control **82***a* causes the work machine **10** to move rearward. The speed attained by the work machine **10** is related to the amount the left control **82***a* is displaced from its neutral position. Charge circuit pressure from one of the hydrostatic pumps flows through the displaced left control **82***a* to control the stroking of each hydrostatic pump. Left-right motion of the left control **82***a* causes the work machine **10** to steer in the respective direction. When the left control **82***a* is at either extent of its lateral motion, counter-rotation of drive systems **72** and **74** may cause a zero turning radius to be accomplished in the associated direction.

[0031] In operational Mode 1, the right control **82***b* may operate the actions of the second work member **20**. In this instance (and similar ones described below), the charge circuit pressure flowing through the displaced right control **82***b* causes the pilot-operated displacement of one or more valve spools in the main control valve. The following description is given for the specific case of the second work member **20** comprising a loader. Forward and rearward displacement of the control **82***b* from its neutral position causes the lift arms **50** to raise and lower, respectively. Left and right displacement of the control **82***b* causes the loader bucket **48** to curl upward to contain a payload, or tilt (uncurl) to accept or discharge a payload.

[0032] A toggle switch (not shown) on top of the control **82***b* may control the flow of hydraulic power to an accessory tool that might be mounted on the first **18** or the second work member **20**—for instance a posthole digger, pavement breaker, or the various work tools described hereinafter. The toggle switch may comprise a three-position rocker switch, where the tool activating (ON) position is detented and the opposite OFF position is spring returned to neutral. Whenever an operator is not properly seated in the seat **78**, an operator presence sensing system in the seat may cause the toggle switch and the controls **82***a* and **82***b* to power down. The system disabling shut-down may be contained within the valve manifold **79**.

[0033] Continuing with **FIG. 1** the second operation mode (Mode 2) will be described with reference to the use of a backhoe assembly for purposes of illustration. The repositioning of the function selector switch will cause the left control **82***a* to operate the boom **30**, the offsetting action of the swing arm **26**, and the swing action (side to side pivoting) of the swing post **28**. Displacement of the control **82***a* longitudinally toward the operator raises the boom **30**, while pushing away from the neutral position lowers the boom. Displacement of the control **82***a* laterally inward toward the operator causes the swing arm **26** to offset the first work member **18** toward the operator's right, while an outward lateral motion moves the swing arm **26** oppositely, for placement of the bucket **34** in a desired position on or laterally offset from the longitudinal centerline **83** (**FIG. 2**) of the frame **12**.

[0034] A toggle switch (not shown) on top of the left control **82***a* controls pivotal movement of the swing post **28** and the boom **30** attached thereto. Pressing on the portion of the rocker switch nearest to the operator causes the boom **30** to swing toward the operator's right, while pressing on the outer portion moves the boom oppositely.

[0035] In Mode 2, the right control **82***b* controls the movement of the dipper **32** and the backhoe bucket **34**. Displacement of the control **82***b* longitudinally toward the operator causes the dipper **32** to move similarly, likewise in the case when moving the control **82***b* away from the neutral position. Displacement of the control **82***b* laterally inward

toward the operator causes the backhoe bucket **34** to curl inward toward the operator; an outward lateral motion uncurls the bucket.

[**0036**] Alternatively, the controls **82***a* and **82***b* could function electronically. Such a joystick or other type of electronic actuator senses hand-motion direction and distance inputs from the operator and sends correlated electrical signal(s) to a controller, which commands the activation of electro-hydraulic valve(s) and/or the output of variable displacement pump(s). One skilled in the art understands that the output response from a valve or pump is usually hydraulic flow rate, in a response proportional to the input signal. (It is also understood that signals from controls **82***a* and **82***b* could directly activate electro-hydraulic valves without use of a controller.) An electro-hydraulic valve also typically delivers a hydraulic flow rate to the circuit it controls in proportion to the input signal. Electronic control of selected functions enables their automatic control and eases the switching of control function assignments to suit operator preferences. For example, two common backhoe control patterns are described as ISO and SAE standard control patterns. These could be selected by simply switching the routing of the control signals via a physical switch or by software within the controller.

[**0037**] The above-mentioned controller may be programmed to automate certain functions of the work machine **10**. For example, it may be desirable to deposit spoils excavated by the first work member **18** a distance from the excavation. Combined pivotal movement of the swing arm **26** and the swing post **28** can accommodate this desire. The motion-to-function assignments of control **82***a*—lateral motion: swing arm **26**; toggle switch: swing post **28**—could be simplified by an operator selectable "coordinated movement" control algorithm. In this operating mode, the coordinated movement of the swing arm **26** and the swing post **28** could be initiated solely by lateral motion of the operator's left hand. As used here, "coordinated movement" refers to simultaneous or sequential amounts of rotation about the respective pivot axes of the swing arm **26** (pivot axis **94**) and the swing post **28** (pivot axis **112**). Their simultaneous coordinated movement may be in a proportional relationship that is lesser than, greater than, or equal to 1:1. The preferred proportional setting—being site dependent—is one that pivots the first work member **18** back and forth between the excavation alignment and the spoil pile without need of manually adjusting the angular relationship between the swing arm **26** and the swing post **28** at either extent of their coordinated movement. This is particularly important at the point of excavation. The boom **30** must be in near parallelism with the desired alignment of the excavation whenever the backhoe bucket **34** is poised to be lowered into the excavation. This can be assured by implementing a "return to dig" subroutine that automatically returns the swing arm **26** and the swing post **28** to their respective angular orientation equating to the excavation alignment. These two "return to dig" angular parameters can be set or input by the operator by one of several commonly known techniques. For instance, when initially placed in the desired positional alignment, the press of a button could cause recording of readings from angular position sensors (e.g., angular encoders or potentiometers) mounted at the two pivot axes. The controller would bring the boom **30** back to this position—after it observes a sequence of electrical control signals representing actions related to lifting, swinging, and opening the backhoe bucket **34** to deposit its contents at the spoil pile—upon the operator's lateral movement of the left control **82***a* in the direction associated with movement toward the excavation. The "return to dig" subroutine would stop the respective angular motions at their set points even though the operator may continue to hold the left control **82***a* laterally displaced. Motion could be stopped prior to reaching these set points by a brief lateral displacement of left control **82***a* in the opposite direction. The "return to dig" subroutine may be utilized separately from the complete "coordinated movement" control cycle. For instance, automated coordinated angular movement of the swing arm **26** and the swing post **28** directed away from the point of excavation may not be particularly helpful in situations where the desired position and/or elevation for depositing the spoil varies from one cycle to the next, or even less frequently.

[**0038**] A useful modification (adaptation) of the "return to dig" subroutine is to equally and oppositely coordinate the angular motions of the swing arm **26** and the swing post **28** whenever they are moved away from coincidence with the longitudinal central axis of the work machine **10**. In other words, the controller holds all offset positions of the first work member **18** in parallel alignment with the longitudinal central axis **83** of the frame **12** by utilizing a feedback control loop that continually monitors readings from the two angular position sensors. This "parallel offset" subroutine is particularly advantageous if a trencher or offsetable vibratory plow is attached to the swing arm **26**. Automated control of parallelism releases the attention of the operator to focus on other important operational tasks. In cases where it is desired that rear work tools of the work machine **10** be solely utilized in parallel alignment, a "mechanized" parallel offset could be accomplished without controller automation.

[**0039**] Turning now to **FIG. 2** there is shown a perspective view of the frame **12** from its first end **14**. The frame **12** may be of a box-like construction comprised of several horizontal and vertical plates. The frame **12** may further comprise a longitudinal axis **83** comprising a midpoint **85**. The plates may comprise the operator platform plate **89**, a power source support plate **90**, a pair of vertical support plates **91** and **92**, and the second work member supports **56**. The cross-braced, box-like construction illustrated in **FIG. 2** provides torsional rigidity in reacting to the working forces exerted on the frame **12** during operation of the work machine **10**. The use of single plate construction for commonly transferring loads and mounting components contributes to compactness and simplicity of the work machine **10**.

[**0040**] Continuing with **FIG. 2**, the frame **12** may also comprise a pedestal **93** supported on the operator's platform **89** and adapted to support the operator's seat **78** (**FIG. 1**). The pedestal **93** may be disposed coaxially with the vertical pivot axis **80** of the control station **22**. As shown in **FIG. 2**, the vertical pivot axis **80** of the control station **22** (**FIG. 1**) may be disposed along the longitudinal axis **83** of the frame **12** such that it intersects the longitudinal axis. The vertical pivot axis **94** of the first work member **18** (**FIG. 1**) is likewise disposed along the longitudinal axis **83** of the frame **12** and passes through a yet to be described first work member **18** mounting assembly.

[**0041**] The vertical side plates **91** and **92** support the second work member supports **56** and a gauge panel **96**. The

second work member supports **56** may be welded to the outer surface **98** of vertical side plates **91** and **92**. The second work member supports **56** may have openings **101** and **102** for mounting the second work member **20** to the frame **12**. Thus, when mounted to the frame **12**, the second work member **20** comprises a substantially horizontal pivot axis **103** disposed in relation to the longitudinal axis **83** of the frame **12**. In **FIG. 2**, the horizontal axis **103** is arranged perpendicular to the longitudinal axis **83** of the frame **12**. It will be appreciated that the box-like construction of the frame allows the pivot axis **80** of the control station **22**, the pivot axis **94** of the first work member **18**, and the pivot axis **103** of the second work member **20** to be disposed in relation to each other to create a close-coupled work machine in accordance with the present invention. It will be further appreciated that the pivot axis **94** of the first work member **18** and the pivot axis **103** of the second work member **20** may be disposed such that the axes substantially overlap.

[**0042**] The gauge panel **96** is shown welded to an inner surface **100** of the vertical side plates **91** and **92**. The gauge panel **96** may have cutouts **104** of varying size and configurations to accommodate the presence of various gauges and controls.

[**0043**] Turning now to **FIG. 3**, there is shown therein a partially cut-away view of the frame **12** shown supporting the first work member **18**. The first work member **18** is supported between the operator's platform **89** and the power source plate **90**. The first work member **18** of **FIG. 3** generally comprises the swing arm **26** pivotally connected to the frame **12** and a swing post **28** pivotally connected to the swing arm **26**. The swing arm **26** is attached to the frame **12** by a swing arm mounting pin **106** with upper **108** and lower **110** support bushings. The swing arm cylinder **42** (See **FIG. 1**) is connected to the frame **12** and the swing arm **26** and provides swing force to the swing arm to move it about the pivot axis **94**. However, it will be appreciated that other mechanisms such as a rotary actuator may be used to provide the swing force used to move the swing arm **26** without departing from the spirit of the invention.

[**0044**] As previously discussed, the swing arm **26** has an unimpeded range of offset positions. The swing arm **26** arrangement of **FIG. 3** is bound only by the swing arm's points of contact with the vertical side plates **91** and **92** and by the extended and retracted range of the swing arm cylinder **42**. The pivot axis **94** of the swing arm **26** is shown for purposes of illustration laterally centered within the frame **12** to allow substantially the same amount of offset left or right for the first work member **18**. As will be discussed with reference to **FIG. 5**, the swing arm's **26** range of motion allows the swing arm cylinder **42** to pivot the swing post **28** and swing arm to a position beyond the left drive system **72** and/or beyond the right drive system **74**.

[**0045**] The swing post **28** is supported on the swing arm **26** and pivotal about pivot axis **112**. The swing post **28** may comprise several mounting points **114** and a swing post cylinder bracket **116**. The mounting points **114** may support the work tool for operation at the first end **14** of the frame. For example, the mounting points may be adapted to connect the boom **30** and cylinder **36** of the backhoe assembly to the work machine **10**. The swing post cylinder bracket **116** extends laterally from the swing post **28** and provides a connection point for the swing post cylinder **44**. The opposing end of the cylinder **44** is connected to a bracket **118** pivotally supported on the swing arm **26**. Connection of the cylinder **44** to the swing arm **26** allows the cylinder to impart a pivot motion to the swing post **28** relative to the swing arm to either side of the swing arm such that the pivot motion of the swing post is not restricted by the position of the swing arm.

[**0046**] Turning now to **FIG. 4**, the work machine **10** of the present invention is shown from the top having the work tool **34** of the first work member **18** in a stowed "Position A". The swing arm **26** is positioned to the left side (operator's right when facing the first end **14** of the frame **12**) of the work machine **10** and the swing post cylinder **44** (**FIG. 3**) is fully retracted. However, the swing post cylinder **44** may be replaced with a conventional rotary actuator swing mechanism (not shown), to increase the range of motion to the stow position of the work tool **34** in "Position B". The "minimum overhang" stow positions shown at Positions A and B improves the functional utilization of the first work member **18** in space-limited applications. The first work member **18** may be stowed with the swing arm **26** at the opposite point in its travel, or anywhere in between. The operator may utilize this feature to enhance the side slope stability of the work machine **10** while maneuvering around a job site and/or during operations of the second work member **20**. It will be appreciated that the addition of appropriate stability (slope) sensors will allow for automatic altering of the stow position by a control system such as described hereinafter. Alternately, a stow position where the swing arm **26** of the first work member **18** is aligned with the longitudinal axis **83** of the frame **12** will offer enhanced counter-balance to the breakout force and lift capacity of the second work member **20**. As previously discussed, the swing arm **26** may be moved beyond the left drive system **72** and the right drive system **74**. However, stowing positions preferably retain the swing arm **26** of the first work member **18** inboard of those boundaries to maintain a narrow lateral profile for the work machine **10**.

[**0047**] With reference now to **FIG. 5**, the work machine **10** is shown from the top with the ROPS **84** cut-away. In **FIG. 5** the first work member **18** is shown in Positions C and D to illustrate the range-of-motion of the first work member when moved by the swing arm cylinder **42** and swing post cylinder **44**. The swing arm cylinder **42** may be utilized to position and hold the swing arm **26** laterally (left or right) anywhere within an arc of motion substantially bisected by the longitudinal axis **83** of the frame **12**.

[**0048**] A lock (not shown) may be provided to hold the swing arm **26** in position once set in a desired operating or stow position. A suitable lock may be, for instance, a hydraulic or otherwise-actuated device such as a frictional clamp (brake), a multi-positional latch, or simply the pinning of the arm **26** to the frame **12** or the operator's platform **89**. Alternately, the swing arm lock could be a closed-loop control system consisting of one or more sensors to determine position of the swing arm **26**, an operator interface (not shown) for the operator to input the desired position, and appropriate control circuitry and logic. The control system receives the input position signal and activates the swing arm cylinder **42** to bring the swing arm **26** to the desired position. A "set" signal from the operator would cause the control system to monitor the sensor output(s) and assure the arm **26** stays in position by activating the swing arm cylinder

42 as may be required to hold the desired position. The stored position point may also be useful for returning the swing arm **26** to the same position time after time. This may ease the burden on the operator in the case where cooperative use of the swing arm cylinder **42** and the swing post cylinder **44** is employed to position the payload discharge of the work tool **34** (backhoe bucket) at a point of greater arcuate reach. Suitable position sensors would include a rotary potentiometer on the swing arm **26** or a linear motion transducer contained on or within the swing arm cylinder **42**.

[**0049**] In **FIGS. 5 and 6**, the arcuate reach of the boom **30** (**FIG. 1** and thus that of the first work member **18**—is illustrated as being at least 260 degrees total, 130 degrees either side of longitudinal axis **83** of the frame **12**. This reach represents the cooperative, combined pivotal motion of the swing arm **26** and the swing post **28** about their respective pivot axes **94** and **112**. The first work member **18** comprising the backhoe assembly can create an excavation in a desired direction within the angular bounds of Position C and Position D, while depositing the excavated spoil at another location within those bounds. It may also create an excavation that is substantially parallel to the longitudinal axis **83** of the frame **12** anywhere within the bounds of Position E and Position F of **FIG. 6**. The lateral extent (offset) of these two positions is dependent upon the amount of arcuate motion available to the swing post **28**—through the action of the swing post cylinder **44**. The offset of Positions E and F are also dependent upon considerations related to the swing arm **26** described below.

[**0050**] Referring still to **FIGS. 5 and 6**, the arc of motion of the swing arm **26** about its pivot axis **94** is preferably of a sufficient degree to allow the first work member **18** to perform its work function(s) along a line substantially parallel to and laterally outside of either the left **72** or right **74** drive system. At any particular offset alignment, this is accomplished by extending or retracting swing post cylinder **44** such that the swing post **28** rotates (positions) the work tool **34** into parallel (though offset) alignment with the longitudinal axis **83** of the frame **12**. As illustrated in **FIGS. 5 and 6**, the full range of motion of the swing arm **26** is 130 degrees of arc. This allows work to be performed centered on a line outside of either the left drive system **72** or the right drive system **74**. Within the bounds of machine stability considerations, the necessary amount of arc is primarily dependent upon the overall width of the drive systems **72** and **74**, the desired lateral distance outside the drive systems **72** and **74** to perform work, and the length of the swing arm **26**. The overall width of the drive systems **72** and **74** might be a single (fixed) value, may have given values for each tread width available for the endless tracks, or—for an adjustable undercarriage—may be of variable width. The arc of motion and length of the swing arm **26**, including being of a telescoping configuration, may be determined in a tradeoff relationship affected by other design variables, such as available space for supported placement of the swing arm pivot axis **94**.

[**0051**] Turning now to **FIG. 7**, there is shown therein the work machine **10** of the present invention excavating a trench shown with dashed lines **120**. The trench **120** is shown offset outside the track **72** and is parallel to the digging alignment of the boom **30**, the dipper **32**, and the backhoe bucket **34**.

[**0052**] The first work member **18** may be positioned at the offset position shown in **FIG. 7** by pivotal action of the swing post **28** and the swing arm **26**. Once the boom **30** is aligned longitudinally parallel to the longitudinal axis **83** of the frame **12** by pivotal action of the swing post **28** and swing arm **26**, the excavation proceeds by coordinated actions of the boom **30**, the dipper **32**, and the bucket **34**. Discharge of spoil from the bucket **34** may be accomplished by arcuate repositioning of the backhoe through pivotal action of the swing post **28** or of the swing arm **26**. The combined pivotal action of the swing post **28** and the swing arm **26** may be useful in instances where one desires the spoil pile to be further displaced from the excavation. In the illustration of **FIG. 7**, depositing of spoil toward the machine centerline side of the excavation will substantially involve pivotal action of the swing arm **26**, as the swing post **28** may have limited remaining motion available in that direction. Conversely, depositing spoil laterally beyond the excavation will substantially involve pivotal action of the swing post **28** since the swing arm **26** may already be in a fully offset position. Alternate tools such as a plow (shown in **FIG. 11**) may be positioned in much the same way as illustrated in **FIG. 7**—thus allowing the tool to operate beyond the left drive system **72** or the right drive system **74**. This arrangement is advantageous when working along an obstruction such as a wall.

[**0053**] Aided by the laterally offsetable first work member **18**, the work machine **10** equipped with an independently adjustable width drive system can be "walked" sideways for close maneuvering in tight quarters. With the swing arm **26** positioned toward the side of the desired direction of machine sideways movement, toward the left in this example, the backhoe bucket **34** can be pressed downward to lift the left side of the machine **10** slightly off the ground while the left drive system **72** is extended. At the same time, the right drive system **74** may be extended to move the machine **10** toward the left. The swing arm **26** may then be moved to the right (opposite) side of the machine **10** to slightly lift the right drive system **74**. The width of the left drive system **72** may then be narrowed to move the machine **10** an additional increment toward the left. Narrowing the right drive system **74** at this time brings the drive system back to its starting position or into position for another sideways movement. A width that is simultaneously rather than independently adjustable can also be utilized to walk the machine **10** sideways in a similar manner. One skilled in the art can readily modify the above procedure to accommodate the situation where the machine **10** initially has its variable width undercarriage fully extended.

[**0054**] Turning now to **FIG. 8**, there is shown therein the work machine **10** of the present invention with an operator **122** seated at the control station **22**. The operator **122** shown in **FIG. 8** may be generally characterized as a 95th percentile male operator. **FIG. 8** illustrates the forward **2** visibility of the second work member **20** and the loader bucket **48**. The steep forward slant to the engine compartment **76** provides the operator **122** with an unobstructed line of sight **124** of the bucket **48** when the lift arms **50** are in the lowered position. The slant of the engine compartment **76** approximately parallels the operator's line of sight **124**. Adjustment of the operator's seat **78** would further improve visibility. Such an adjustment is practical even for larger operators **78** because of placement of the controls **82** on the seat, rather than on a console. Perforating a portion of the ROPS **84** (**FIG. 4**)

canopy provides the operator **122** with improved visibility of the bucket **48** when the lift arms **50** are in the upper position.

[**0055**] Positioning of the low-profile power source **70** in relation to the operator's line-of sight **122** helps to achieve the unobstructed line-of-sight illustrated in **FIG. 8**. Lower positioning of the power source **70** is accomplished, in part, by driving the left drive system **72** and the right drive system **74** at their respective inboard rearward ends. This arrangement provides a clear space between the forward end of the left drive system **72** and the right drive system **74**, where the lower part of the frame **12** (**FIG. 2**)—i.e., the vertical side plates **91** and **92** and the engine support plate **90**—can lay, as illustrated in **FIG. 2**. For purposes of illustrations, forward ins the direction the operator **122** is facing in **FIG. 8**. An engine-pump assembly (described hereinafter) is disposed between the vertical side plates **91** and **92** of the frame **12**, partially nested between the left drive system **72** and the right drive system **74**. The engine compartment **76** can thus be forward-sloped for improved operator visibility-towards the second work member **20**.

[**0056**] Side-by-side arrangement of the engine-pump assembly (not shown) within the engine compartment **76** shortens the engine compartment and the second end **16** of the frame **12**. The second work member supports **56** can thus be placed further rearward on the frame **12**. The shortened first **14** and second **16** ends of the frame **12** are further complemented by a condensed central portion, made possible by the compact length of the operator platform **89**. Its compact length is primarily the outcome of utilizing the on-seat controls **82** instead of pedestal-mounted controls for the first and second work members **18** and **20**.

[**0057**] Continuing with **FIG. 8**, the downward sloped shroud of the engine compartment **76** is possible because the drive system components (not shown) are mounted low within the frame **12**, on the power source plate **90** (See **FIG. 2**). It will be appreciated that the power train components may comprise an engine-powered hydrostatic pump assembly configured with an axial "stack" of two hydrostatic pumps (one to drive each of the left drive system **72** and the right drive system **74**) and an auxiliary pump supported along side a rearward-facing engine. The side-by-side arrangement of the engine and hydraulic pumps shortens the engine compartment **76** and, likewise, the second end **16** of the frame **12**.

[**0058**] Referring now to **FIG. 9**, the operator's visibility of the first work member **18** is illustrated. **FIG. 9** depicts the work machine **10** with a backhoe first work member **18** near its full digging depth, in alignment with the longitudinal axis **83** of frame **12**. The operator's unobstructed view **126** of the backhoe bucket **34** is indicated by a dashed line. The openness of the operator platform **89** is particularly apparent with the backhoe assembly in its lowered position. It will be appreciated that the operator's view **126** over the operator platform **89** can be improved by readjusting the seat **78** towards the first work member **18**.

[**0059**] It will be appreciated that the operator's line-of-sight **126** remains substantially unobstructed when the first work member **18** is deployed for excavating parallel to the longitudinal axis **83** of the frame **12** outside either of the drive systems **72** and **74**. Essentially the operator's knees may comprise the only obstruction to his/her view of the bucket **34**. The work machine **10** offers unobstructed operator visibility of the first work member **18** in any of its possible working positions shown in **FIGS. 5 and 6**.

[**0060**] With reference now to **FIG. 10**, there is shown therein an alternative configuration of the work machine **10** of the present invention. The work machine **10** of **FIG. 10** comprises the first work member **18** having a backhoe assembly supported thereon and the second work member **20** comprising a trencher **128** supported by the tool carrier **46**. In this arrangement, the machine **10** travels rearward while trenching. The operator may face the operator's seat **78** in that direction, as shown. However, facing the seat **78** toward the left or right side of the machine **10** offers improved visibility of the trencher **128** and the path to be traveled.

[**0061**] It will be appreciated that one or more tools or work members are suitable for mounting at either end of the work machine **10**. Although not illustrated, one or more quick-attach mechanisms (tool carrier adapters) could also be configured with the first work member **18**. For instance, a quick-attach mechanism could be mounted between the dipper **32** and the rear work tool (backhoe bucket) **34**. The bucket **34** may then be quickly replaced with other tools or work members suitable for boom-mounting. These may include an offsetable vibratory plow, a trencher **128**, and other devices such as a compaction wheel, a vibratory compactor, or a pavement breaker. Mounting of trencher **128** at the distal end of the dipper **32** would allow the trencher to be utilized above or below the ground's surface, and/or at extended lateral reach.

[**0062**] A quick-attach mechanism **130** could also be mounted to the swing post **28** to facilitate conversion to a more closely-coupled but offsetable tool, such as the vibratory plow **132** shown in **FIG. 11**. In this case, the swing arm **26** in conjunction with the swingable attachment frame **134** (and their hydraulic cylinders **42** and **44**) provides the lateral offset capability. A lifting mechanism (not shown), to raise and lower the plow **132**, is also contained within the attachment frame **134**. A similar arrangement may be utilized for supporting a trencher **128** from the swing arm **26**.

[**0063**] Turning now to **FIG. 12**, yet another configuration for work machine of the present invention is illustrated. In work machine **10** of **FIG. 12** the second work member **20** is shown supporting a dump bed **136**. The dump bed **136** is configured to be located above the engine compartment **76** of the work machine **10**. The contour of the rear lower portion of the dump bed **138** is designed to generally follow the contour of the engine compartment **76** and lift arms **50**. This contour and the fact that the dump bed **136** is located above the engine compartment **76** moves the center of gravity (CG) **140** of the dump bed closer to the CG of the work machine **10**. This allows more weight to be carried in the dump bed **136** when moving the load from one location to another, compared to the load that could be carried with a more normal bucket configuration (i.e., further out in front of the machine **10**). Discharge cylinders **142** provide a dumping force to tilt the dump bed **136** to allow the material **144** contained within to be dumped on the ground and to thus empty the dump bed **136**. During the operation of dumping, the CG **140** of the dump bed **136** moves forward. To reduce the chance of the machine **10** tipping forward, a support plate **146** may be lowered to contact the ground by the activation of cylinder(s) **148**.

[0064] It will be appreciated that the dump bed **136** may be detached from the unit by disconnecting the tilt arm cylinder(s) **142** and removing attachment pins **150**. In this arrangement, the dump bed **136** may be fitted with at least one removable support leg **152**. The support leg and the base of the bed **136** allow the dump bed to sit upright on the ground. In this way the dump bed **136** could be filled by another machine or by hand while the work machine **10** is being used elsewhere. Alternately, the dump bed **136** could be filled by use of the first work member **18** or second work member **20**. Once filled with material, the dump bed **136** may be picked up again by the machine **10** and transported to another location to deposit the material. A similar "over the engine compartment **76**" configuration could be used for some other attachments when additional weight or bulk must be carried—for instance, a flat pallet for carrying sacks or roofing materials, or a concrete transporter.

[0065] Various modifications can be made in the design and operation of the present invention without departing from the spirit thereof. Thus, while the principal preferred construction and modes of operation of the invention have been explained in what is now considered to represent its best embodiments, which have been illustrated and described, it should be understood that the invention may be practiced otherwise than as specifically illustrated and described.

1. A work machine comprising:

a frame having a first end and a second end;

a first work member supported by the frame so that the first work member is operable at the first end of the frame;

a second work member supported by the frame so that the second work member is operable at the second end of the frame;

a pivotal control station supported by the frame and movable between at least a first position and a second position and adapted to control the first work member when in the first position and to control the second work member when in the second position.

2. The work machine of claim 1 wherein the second work member comprises a tool carrier.

3. The work machine of claim 2 further comprising a work tool supported by the tool carrier.

4. The work machine of claim 1 wherein the first work member comprises a tool carrier and wherein the second work member comprises a tool carrier.

5. The work machine of claim 1 wherein the pivotal control station comprises a plurality of controls supported on the control station, the controls being adapted to control operation of the first work member and the second work member.

6. The work machine of claim 5 wherein the control station comprises a pivotal operator seat and wherein the plurality of controls are disposed at the operator seat.

7. The work machine of claim 1 comprising a low-profile power source supported by the frame.

8. The work machine of claim 7 wherein the second work member comprises:

a lift arm having a first end and a second end, the first end being pivotally connected to the frame, and the second end being movable in a range of motion comprising a lower position and an upper position; and

a work tool supported by the second end of the lift arm.

9. The work machine of claim 8 wherein the work tool comprises a loader bucket.

10. The work machine of claim 8 further comprising:

a first unobstructed line of sight extending from the control station over the low-profile power source to the work tool when the second end of the lift arm is in the lower position; and

a second unobstructed line of sight extending from the control station to beyond the work tool when the second end of the lift arm is in the upper position.

11. The work machine of claim 1 further comprising a low-profile left drive system and a low-profile right drive system, both systems being supported by the frame for propelling the frame in a plurality of directions.

12. The work machine of claim 11 wherein the left and right drive systems each comprise an endless track.

13. The work machine of claim 11 wherein the left and right drive systems each comprise at least two low-profile wheels and wherein the wheels can be steered in a skid arrangement.

14. The work machine of claim 11 wherein the first work member comprises:

a swing arm pivotally connected to the frame, the swing arm having a central longitudinal axis;

a swing post pivotally connected to the swing arm;

a swing arm actuator fixed to the frame and adapted to pivot the swing arm and swing post relative to the frame to a plurality of positions, the plurality of positions including at least one position placing the swing post beyond the left drive system, and at least one position placing the swing post beyond the right drive system; and

a swing post actuator fixed to the swing arm and adapted to impart a pivot motion to the swing post relative to the swing arm to either side of the central longitudinal axis of the swing arm such that the pivot motion of the swing post is not restricted by the position of the swing arm.

15. The work machine of claim 1 wherein the frame comprises a longitudinal axis comprising a midpoint; wherein the pivotal control station comprises a substantially vertical pivot axis disposed near the midpoint of the longitudinal axis; wherein the first work member comprises a substantially vertical pivot axis disposed near the midpoint of the longitudinal axis of the frame; and wherein the second work member comprises a substantially horizontal pivot axis disposed near the midpoint of longitudinal axis of the frame.

16. The work machine of claim 15 wherein the pivot axis of the control station, the pivot axis of the first work member, and the pivot axis of the second work member are disposed in relation to each other to create a close-coupled work machine.

17. The work machine of claim 16 wherein the pivot axis of the first work member and the pivot axis of the second work member substantially overlap.

18. The work machine of claim 1 wherein the first work member comprises:

a swing arm pivotally connected to the frame;

a swing post pivotally connected to the swing arm;

a work tool supported by the swing post; and

an unobstructed line of sight extending from the control station to the work tool of the first work member.

19. An excavator comprising:

a frame having a first end and a second end;

a control station supported by the frame;

a low-profile power source supported by the frame;

a first work member supported by the frame so that the first work member is operable at the first end of the frame and operated by the control station;

a second work member supported by the frame so that the second work member is operable at the second end of the frame and operated by the control station, the second work member comprising:

a lift arm having a first end and a second end, the first end being pivotally connected to the frame, and the second end being movable in a range of motion comprising a lower position and an upper position;

a work tool supported by the second end of the lift arm;

a first unobstructed line of sight extending from the control station over the low-profile power source to the work tool when the second end of the lift arm is in the lower position; and

a second unobstructed line of sight extending from the control station to beyond the work tool when the second end of the lift arm is in the upper position.

20-21. (canceled)

22. The excavator of claim 19 wherein the control station is movable between at least a first position and a second position and adapted to control the first work member when in the first position and to control the second work member when in the second position.

23. The excavator of claim 22 wherein the control station comprises a plurality of controls operatively supported on the control station, the controls being adapted to control operation of the first work member and the second work member.

24-25. (canceled)

26. The excavator of claim 19 further comprising a low-profile left drive system and a low-profile right drive system both systems being supported by the frame for propelling the frame in a plurality of directions.

27-28. (canceled)

29. The excavator of claim 26 wherein the first work member comprises:

a swing arm pivotally connected to the frame, the swing arm having a central longitudinal axis;

a swing post pivotally connected to the swing arm;

a swing arm actuator fixed to the frame and adapted to pivot the swing arm and swing post relative to the frame to a plurality of positions, the plurality of positions including at least one position placing the swing post beyond the left drive system, and at least one position placing the swing post beyond the right drive system; and

a swing post actuator fixed to the swing arm and adapted to impart a pivot motion to the swing post relative to the swing arm to either side of the central longitudinal axis of the swing arm such that the pivot motion of the swing post is not restricted by the position of the swing arm.

30. The excavator of claim 19 wherein the frame comprises a longitudinal axis comprising a midpoint; wherein the pivotal control station comprises a substantially vertical pivot axis disposed near the midpoint of the longitudinal axis; wherein the first work member comprises a substantially vertical pivot axis disposed near the midpoint of the longitudinal axis of the frame; and wherein the second work member comprises a substantially horizontal pivot axis disposed near the midpoint of the longitudinal axis of the frame.

31. The excavator of claim 30 wherein the pivot axis of the control station, the pivot axis of the first work member, and the pivot axis of the second work member are disposed in relation to each other to create a close-coupled work machine.

32. (canceled)

33. The excavator of claim 19 wherein the first work member comprises:

a swing arm pivotally connected to the frame;

a swing post pivotally connected to the swing arm;

a work tool supported by the swing post; and

an unobstructed line of sight extending from the control station to the work tool of the first work member.

34. An excavator comprising:

a frame comprising a first end and a second end;

a low-profile left drive system and a low-profile right drive system both supported by the frame for propelling the frame in a plurality of directions;

a first work member supported by the frame so that the first work member is operable at the first end of the frame, the first work member comprising:

a swing arm pivotally connected to the frame and having a central longitudinal axis;

a swing post pivotally connected to the swing arm;

a swing arm actuator fixed to the frame and adapted to pivot the swing arm and swing post relative to the frame to a plurality of positions, the plurality positions including at least one position placing the swing post beyond the left drive system and at least one position placing the swing post beyond the right drive system; and

a swing post actuator fixed to the swing arm and adapted to impart a pivot motion to the swing post relative to the swing arm to either side of the central longitudinal axis of the swing arm such that the pivot motion of the swing post is not restricted by the position of the swing arm; and

a second work member supported by the frame so that the second work member is operable at the second end of the frame.

35. The excavator of claim 34 wherein the first work member comprises a work tool operatively connected to the swing post.

36. The excavator of claim 35 wherein the work tool comprises:

a boom connected to the swing post;

a dipper connected to the boom; and

an excavating bucket connected to the dipper.

37. The excavator of claim 34 further comprising a pivotal control station supported by the frame and movable between at least a first position and a second position and adapted to control the first work member when in the first position and to control the second work member when in the second position.

38. The excavator of claim 37 wherein the pivotal control station comprises a plurality of controls supported on the control station, the controls being adapted to control operation of the first work member and the second work member.

39-47. (canceled)

48. The excavator of claim 34 further comprising:

a work tool supported by the swing post; and

an unobstructed line of sight extending from the control station to the work tool of the first work member.

49. A work machine comprising:

a frame having a first end, a second end and a longitudinal axis comprising a midpoint;

a pivotal control station supported by the frame and having a substantially vertical pivot axis disposed near the midpoint of the longitudinal axis;

a pivotal first work member supported by the frame having a substantially vertical pivot axis disposed near the midpoint of the longitudinal axis of the frame; and

a pivotal second work member supported by the frame having a substantially horizontal pivot axis.

50. The work machine of claim 49 wherein the pivotal control station is movable between a first position and a second position and adapted to control the first work member when in the first work position and to control the second work member when in the second work position.

51. The work machine of claim 49 wherein the pivotal control station comprises a plurality of controls supported on the control station, the controls being adapted to control operation of the first work member and the second work member.

52-55. (canceled)

56. The work machine of claim 49 further comprising a low-profile power source supported by the frame.

57. The work machine of claim 56 wherein the second work member comprises:

a lift arm having a first end and a second end, the first end being pivotally connected to the frame, and the second end being movable in a range of motion comprising a lower position and an upper position; and

a work tool supported by the second end of the lift arm.

58. (canceled)

59. The work machine of claim 57 further comprising:

a first unobstructed line of sight extending from the control station over the low-profile power source to the work tool when the second end of the lift arm is in the lower position; and

a second unobstructed line of sight extending from the control station to beyond the work tool when the second end of the lift arm is in the upper position.

60. The work machine of claim 49 further comprising a low-profile left drive system and a low-profile right drive system, both systems being supported by the frame for propelling the frame in a plurality of directions.

61. The work machine of claim 60 wherein the first work member comprises:

a swing arm pivotally connected to the frame, the swing arm having a central longitudinal axis;

a swing post pivotally connected to the swing arm;

a swing arm actuator fixed to the frame and adapted to pivot the swing arm and swing post relative to the frame to a plurality of positions, the plurality of positions including at least one position placing the swing post beyond the left drive system, and at least one position placing the swing post beyond the right drive system; and

a swing post actuator fixed to the swing arm and adapted to impart a pivot motion to the swing post relative to the swing arm to either side of the central longitudinal axis of the swing arm such that the pivot motion of the swing post is not restricted by the position of the swing arm.

62. The work machine of claim 49 wherein the pivot axis of the control station, the pivot axis of the first work member, and the pivot axis of the second work member are disposed in relation to each other to create a close-coupled work machine.

63. The work machine of claim 49 wherein the first work member comprises:

a swing arm pivotally connected to the frame;

a swing post pivotally connected to the swing arm;

a work tool supported by the swing post; and

an unobstructed line of sight extending from the control station to the work tool of the first work member.

64. (canceled)

65. An excavator comprising:

a frame having a first end and a second end;

a pivotal control station supported by the frame;

a first work member supported by the frame so that the first work member is operable at the first end of the frame, the first work member comprising;

a swing arm pivotally connected to the frame;

a swing post pivotally connected to the swing arm; and

a work tool supported by the swing post;

a second work member supported by the frame so that the second work member is operable at the second end of the frame;

an unobstructed line of sight extending from the control station to the work tool of the first work member.

66. The excavator of claim 65 wherein the pivotal control station is movable between at least a first position and a second position and adapted to control the first work member when in the first work position and to control the second work member when in the second work position.

67. The excavator of claim 65 wherein the pivotal control station comprises a plurality of controls supported on the control station, the controls being adapted to control operation of the first work member and the second work member.

68. (canceled)

69. The excavator of claim 65 further comprising a low-profile power source supported by the frame.

70. The excavator of claim 69 wherein the second work member comprises:

a lift arm having a first end and a second end, the first end being pivotally connected to the frame, and the second end being movable in a range of motion comprising a lower position and an upper position; and

a work tool supported by the second end of the lift arm.

71. The excavator of claim 70 further comprising:

a first unobstructed line of sight extending from the control station over the low-profile power source to the work tool when the second end of the lift arm is in the lower position; and

a second unobstructed line of sight extending from the control station to beyond the work tool when the second end of the lift arm is in the upper position.

72. The excavator of claim 65 wherein the pivot axis of the control station, the pivot axis of the first work member, and the pivot axis of the second work member are disposed in relation to each other to create a close-coupled work machine.

73. A work machine comprising:

a frame having a first end and a second end;

a pivotal control station supported by the frame and having a substantially vertical pivot axis;

a pivotal first work member supported by the frame so that the first work member is operable at the first end of the frame and the first work member comprising a substantially vertical pivot axis;

a pivotal second work member supported by the frame so that the second work member is operable at the second end of the frame and comprises a substantially horizontal pivot axis;

wherein the pivot axis of the control station, the pivot axis of the first work member, and the pivot axis of the second work member are disposed in relation to the frame to create a close-coupled work machine.

74. The work machine of claim 73 wherein the pivotal control station is movable between at least a first work position and a second work position and adapted to control the first work member when in the first work position and to control the second work member when in the second work position.

75-76. (canceled)

77. The work machine of claim 73 further comprising a low-profile left drive system and a low-profile right drive system, both systems being supported by the frame for propelling the frame in a plurality of directions.

78. The work machine of claim 77 wherein the first work member comprises:

a swing arm pivotally connected to the frame, the swing arm having a central longitudinal axis;

a swing post pivotally connected to the swing arm;

a swing arm actuator fixed to the frame and adapted to pivot the swing arm and swing post relative to the frame to a plurality of positions, the plurality of positions including at least one position placing the swing post beyond the left drive system, and at least one position placing the swing post beyond the right drive system; and

a swing post actuator fixed to the swing arm and adapted to impart a pivot motion to the swing post relative to the swing arm to either side of the central longitudinal axis of the swing arm such that the pivot motion of the swing post is not restricted by the position of the swing arm.

79-80. (canceled)

* * * * *