Aug. 15, 1939. S. HAMMER 2,169,691

IMPOSITIVE LOCK

Filed Dec. 20, 1938

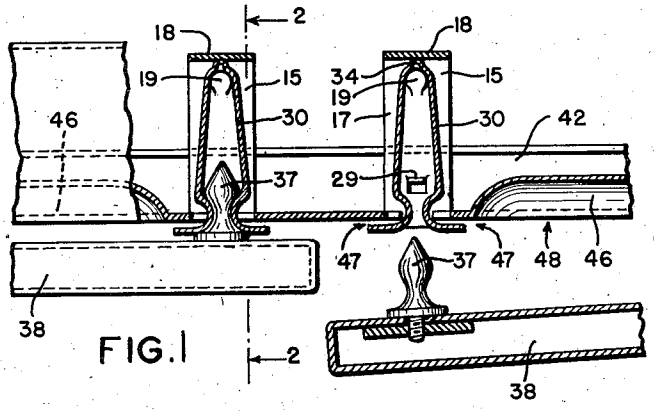

FIG. 1

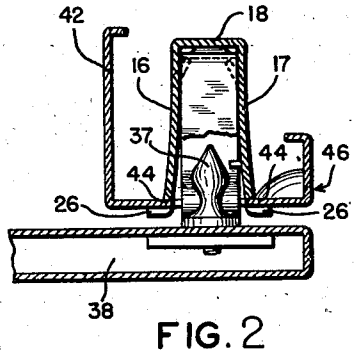

FIG. 2

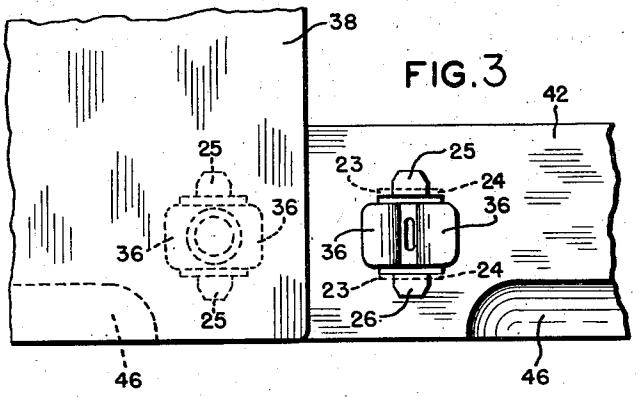

FIG. 3

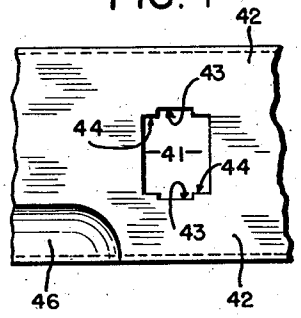

FIG. 4

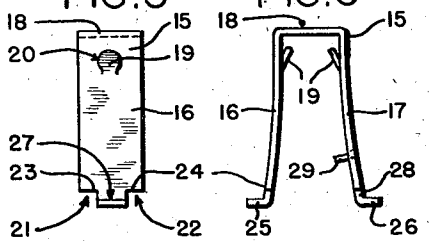

FIG. 5

FIG. 6

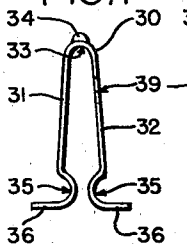

FIG. 7

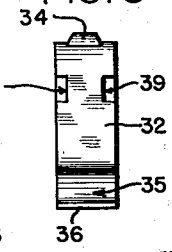

FIG. 8

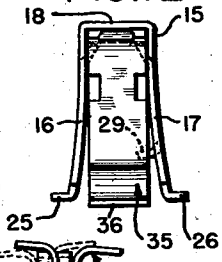

FIG. 12

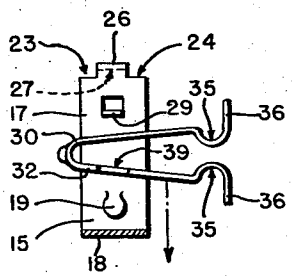

FIG. 9

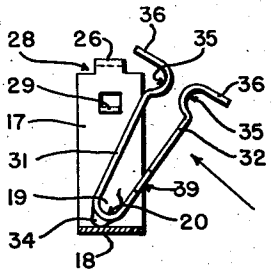

FIG. 10

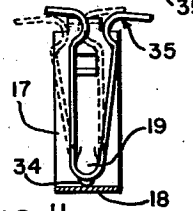

FIG. 11

INVENTOR

SAMUEL HAMMER

BY Bohlebur & Ledbetter

ATTORNEYS

Patented Aug. 15, 1939 2,169,691

UNITED STATES PATENT OFFICE

2,169,691

IMPOSITIVE LOCK

Samuel Hammer, Brooklyn, N. Y., assignor to United Metal Box Co., Inc., Brooklyn, N. Y., a corporation of New York

Application December 20, 1938, Serial No. 246,782

5 Claims. (Cl. 292—17)

This invention relates to an impositive lock or door catch for use on cabinets, cupboards, closets or the like, and particularly when such articles are made of sheet metal.

An important object of my invention is to provide a device of the class described which is adapted to be operatively mounted on a sheet metal article of the class described without the use of the usual securing means, such as screws, bolts, rivets, welding or otherwise.

Another important object of my invention is to make a door catch of simple construction which can be made economically and which will operate silently and efficiently.

Other objects and advantages of my invention will either become apparent from the description thereof written in connection with the accompanying drawing, or will be specifically referred to hereinafter.

Figure 1 of the drawing is a plan view illustrating, by way of example, the manner of mounting my improved catch on the bottom rail of a sheet metal cabinet or the like.

Figure 2 is a sectional view taken on line 2—2 of Figure 1 and looking in the direction of the arrows.

Figure 3 is a front view of the device shown in Figure 1 with the right hand door removed.

Figure 4 is a view of the outline of an opening pierced in the face of the bottom rail of a cabinet suitable for cooperating with my catch to retain the same in operative position.

Figures 5 to 8 are side and plan views respectively of two hingeably cooperating outside and inside members comprising the part of my catch which is secured to the cabinet as distinguished from the door.

Figures 9 and 10 are detail views of the manner of assembling the outside and inside members shown in Figures 5 to 8.

Figures 11 and 12 show my improved catch as assembled and prior to mounting or being finally secured to the cabinet or other article on which it is to be used, as shown in Figures 1, 2 and 3.

Referring now to the drawing, and particularly to Figures 5 and 6, it will be seen that my improved catch preferably comprises a channel or U-shaped outside member 15 made of a single piece of sheet metal bent to form two side pieces 16 and 17 connected together by a base 18. Each of the side pieces 16 and 17 is flared outwardly from each other, as shown, and comprises a hinge lug 19 having a rounded end 20 struck out at a point proximate the base 18 and bent inwardly. The end of each of the sides 16 and 17 is notched, as at 21 and 22, to form shoulders 23 and 24. The portions of the side pieces remaining between the notches 21 and 22 are bent outwardly to form respectively a lug 25 on the end of the side 16 and a lug 26 on the end of the side 17. It will be noted, for reasons to be hereinafter referred to, that the inside surface 27 of the lugs 25 and 26 are spaced from the shoulders 23 and 24 a distance approximately equal to the gauge of the metal from which the rail 42, to be hereinafter described, is formed, leaving the lugs 25 and 26 connected, as it were, to the sides 16 and 17 by a neck 28. A lug 29 is struck out of the side 17 and bent inwardly, as shown, for a purpose to be hereinafter described.

Referring now to Figures 7 and 8, it will be seen that a second U-shaped or inside member 30 is made of a single strip of sheet metal which is bent to form a pair of side pieces 31 and 32 connected at one end to a more or less circular shaped base 33, having an inside curvature similar to that of the rounded end 20 of the lugs 19 above described. A portion of the base 33 is swaged or otherwise bumped or bulged outwardly to form a knob 34 projecting in the direction of the longitudinal axis of the member 30 and adapted to cooperate with the base 18 of the member 15. The free ends of the side pieces 31 and 32 are formed with inwardly curved portions 35 having outwardly extending ends 36 adapted to engageably cooperate with a suitably formed keeper 37, secured in any suitable way to the doors 38, all as shown in Figures 1 and 2. The keeper here shown is cylindrical and made to resemble, somewhat, the head of a pointed collar button, although it will be understood that keepers of other forms may be used. Clearance notches 39 are formed on opposite edges of the side 32 of the inside member 30 to facilitate the assembly of the device.

Referring now to Figures 9 and 10, it will be understood that the outside and inside members 15 and 30, above described, may be assembled by disposing the member 30 between the sides of the member 15 and moving the former in the direction of the arrow shown in Figure 9, until the inwardly projecting hinge lugs 19 on the member 15 have passed through the notches 39 on the member 30, after which the member 30 is moved bodily to the right whereby the side 32 proximate the base 33 is disposed between the hinge lugs 19 and the base 18 of the member 15, whereupon the member 30 is then rotated in the direction illustrated by the arrow in Figure 10 to hingeably connect the same to the mem-

ber 15. The two members 15 and 30 are finally assembled as shown in Figure 12 with the sides of each member disposed normal to the sides of the other, by opening the sides 16 and 17, far enough to permit the lug 29 to be disposed between the sides 31 and 32 of the member 30. Figure 11 illustrates how the lug 29 will limit the oscillating movement of the member 30 between two extreme positions when said member 30 is finally hingedly assembled on the lugs 19 to the member 15, as above described. It will be understood that the purpose of the knob 34 is to insure that the base 33 of the member 30 fits snugly, albeit hingeably, between the base 18 and lugs 19 of the member 15.

Referring now to Figure 4, it will be seen that a generally rectangular hole or opening 41 is pierced in a rail 42 in which the lock or catch is to be positioned. It will be understood that the lock may be located on any other suitable part of the cabinet or cupboard and that the manner here shown for mounting the same is merely illustrative. The hole 41 comprises notches 43 formed opposite each other in the short sides thereof, whereby abutments 44 are formed for the purpose of cooperating with the shoulders 23 and 24 of the member 15 to secure the lock in operative position on the cabinet. The width of the hole 41 is approximately equal to the width of the sides 16 and 17 while the length of the hole 41 is somewhat less than the distance between the flared ends of the sides 16 and 17 whereby the member 15, with the member 30 assembled therein, may be pressed into the hole 41 against the resilient pressure offered by the sides 16 and 17 against the abutments 44 until the surfaces 27 of the lugs 25 and 26 come into engagement with the surface of the rails 42, whereupon the sides 16 and 17, being resilient, will spring outwardly and dispose the shoulders 23 and 24 beneath the abutments 44 with the neck 29 disposed in the notches 43 of the hole 41 and prevent the withdrawal of the catch from the rail 42.

Referring now to Figures 1 and 3, it will be seen that I have illustrated diagrammatically how a pair of impositive locks like those above described may be mounted proximate the center and on the bottom rail of a cabinet having two doors 38 hinged respectively at points remote from the center of the cabinet by means not shown. A depression 46 is formed in the lower forward edge of the rail to enable one to take hold of the inside of the door and open the same by withdrawing the keeper 37 from between the ends 35 of the member 30 when the same is mounted on the cabinet, as above described.

Other advantages of my improved lock are that the inner member 30 is adapted to move from side to side, as shown in Figure 11, and align itself so as to properly cooperate with the keeper 37 and make it unnecessary to use extreme care in properly mounting the keeper with respect to the front edge of the door. Moreover, the width of the member 30 and its outward ends is larger than the keeper member so that the lock is adapted to cooperate therewith if the cabinet becomes twisted slightly or the keeper located at slightly varying distances from the lower edge of the door. The binding action between the knob 34 on the member 30 and the base 18 of the member 15, is preferably made to prevent the former from rattling with respect to the latter and at the same time insure proper movement thereof and that the catch will operate quickly in adjusting itself as occasion requires.

A further advantage in a catch of the class described is that the same may be assembled on a cabinet after the cabinet is enameled without marring the finished surface.

In Figure 1, it will be seen that a space 47 is provided between the ends 36 of the member 30 and the finished surface 48 of the cabinet so that the member 30 is adapted to move from side to side and automatically adjust itself without scraping the finished surface of the member on which it is mounted.

Various modifications in the configuration, composition and disposition of the component elements which in combination constitute my improved impositive lock may occur to those skilled in the art, hence the foregoing description of my invention is intended as an aid in understanding the scope of the appended claims and not to unnecessarily limit the same.

What is claimed is:

1. In an impositive lock for a cabinet or the like comprising a keeper adapted to be mounted on a door of a cabinet, means for yieldably engaging said keeper and adapted to be mounted on the cabinet, said engaging means comprising in combination a pair of hingeably cooperating inside and outside members, said inside member comprising a rounded base terminating in a pair of relatively yieldable keeper engaging portions, and said outside member comprising a pair of lugs upon which the inside member is hinged through cooperation with the rounded base of said inside member, and yieldable means adapted to secure said keeper engaging elements to said cabinet.

2. An article of manufacture forming a part of an impositive lock adapted to be mounted on a cabinet, comprising an outside member having hinge means carried thereby, said outside member being formed with resilient wall means having engaging means thereon to attach said member yieldably in an opening formed in said cabinet, in combination with an inside member adapted to oscillate within said outside member and yieldably to engage a keeper, said inside member comprising means hingeably cooperating with the hinge means carried by the outside member.

3. An article of manufacture forming a part of an impositive lock adapted to be mounted on a cabinet, comprising an outside member having hinge means carried thereby, said outside member being formed with resilient wall means having engaging means thereon to attach said member yieldably in an opening formed in said cabinet, in combination with an inside member adapted to oscillate within said outside member and yieldably engage a keeper, said inside member comprising means hingeably cooperating with the hinge means carried by the outside member and means for limiting the movement of said inside member with respect to said outside member.

4. An article of manufacture forming a part of an impositive lock adapted to be mounted on a cabinet by engagement with the marginal edge of an opening formed in said cabinet, comprising an outside member having a pair of relatively yieldable sides and a hinge lug projecting inwardly from each of said sides, and means on each side adapted to engage the marginal edge of an opening in said cabinet in combination with an inside member movably disposed within said outside member and adapted yieldably to engage

a keeper, said inside member comprising a base hingeably mounted between the lugs on said outside member, and means for limiting the movement of said inside member with respect to said outside member.

5. An article of manufacture forming a part of an impositive lock adapted to be mounted on a cabinet by engagement with the marginal edge of an opening suitably formed in said cabinet, comprising an outside U-shaped member having a base, two sides and a hinge lug proximate said base projecting inwardly from each of said sides, and means on each side adapted to engage the marginal edge of an opening in said cabinet in combination with an inside U-shaped member movably disposed in said outside member with the sides of the latter disposed substantially normal to the sides of the former and being adapted yieldably to engage a keeper, said inside member comprising a base hingeably mounted between the lugs and base of said outside member, means for limiting the movement of said inside member with respect to said outside member, and a knob frictionally engaging the base of said outside member.

SAMUEL HAMMER.