United States Patent

[11] 3,593,708

[72] Inventor Victor Steele
6311 Yucca, Hollywood, Calif. 90028

[21] Appl. No. 848,823
[22] Filed Aug. 11, 1969
[45] Patented July 20, 1971

[54] **BODY SUSPENSION DEVICE**
8 Claims, 21 Drawing Figs.

[52] U.S. Cl. 128/75, 272/61
[51] Int. Cl. A61h 1/02
[50] Field of Search 128/68, 70, 68.1, 75; 272/61, 85; 269/322, 323

[56] References Cited

UNITED STATES PATENTS

2,444,618	7/1948	Seamster	272/85
2,887,151	5/1959	Springer	128/70 X

FOREIGN PATENTS

1,151,095	7/1963	Germany	128/70

Primary Examiner—L. W. Trapp
Attorney—Smyth, Roston & Pavitt

ABSTRACT: A device for suspending the portion of a human body above the pelvic region in an inverted position to provide a natural traction and to relieve the spinal column of gravitational compression which occurs when the body is in its normal upright position. The device includes a trapeze bar upon which is provided at least one rotatable platform having a padded face. When this face is initially disposed in a vertical position, the upper thighs of the legs may be pressed against it and if the upper part of the body is bent over the bar, the padded platform rotates on the bar to enable the person's body to be swung over the bar until the torso hangs downwardly, being supported by the thighs resting on the platform face. The legs of the body may be bent at the knees until the soles of the feet rest against vertical elements supporting the trapeze bar. Various other means are provided to facilitate the mounting and dismounting of the body for suspension and to render the latter more comfortable.

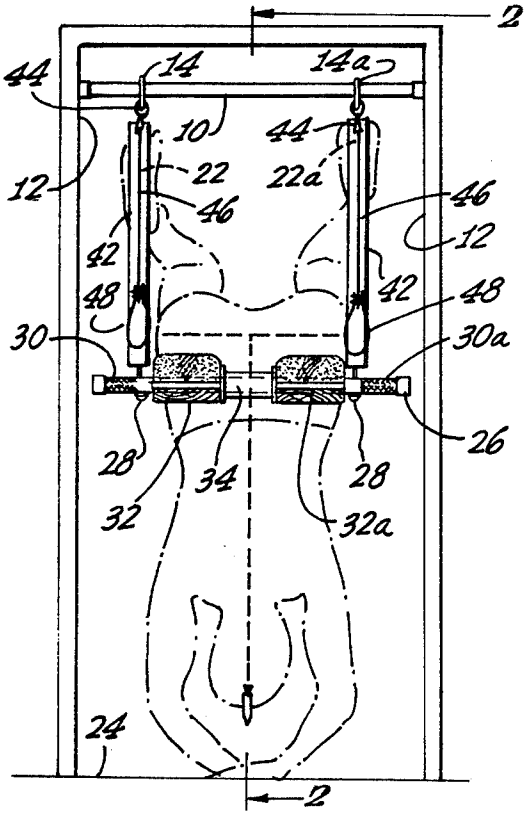

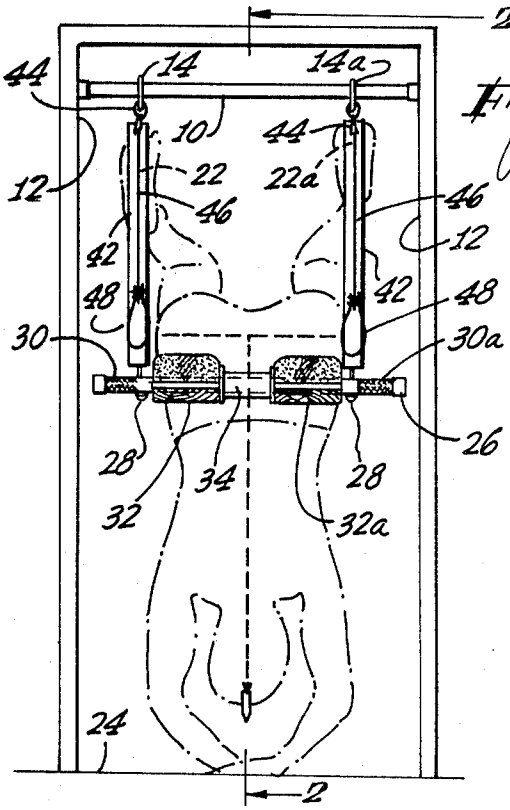

Fig. 1

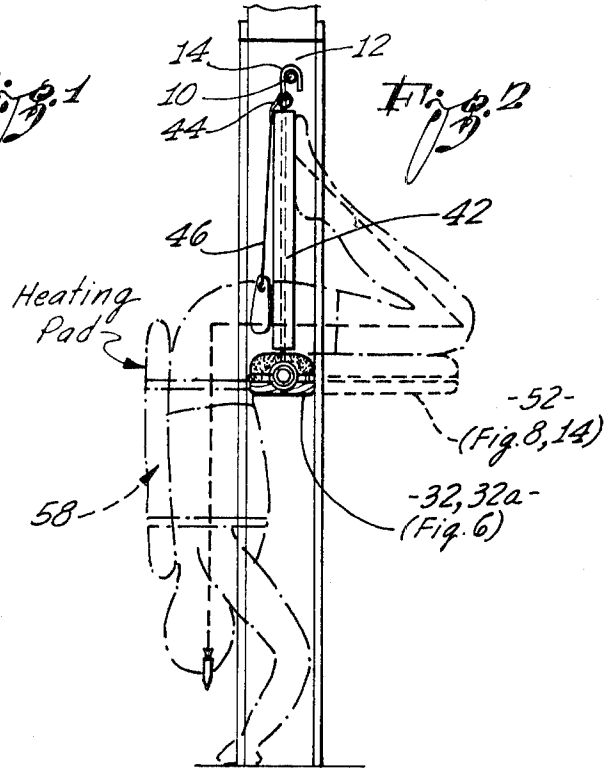

Fig. 2

Fig. 3

Fig. 1a

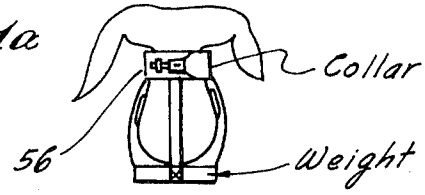

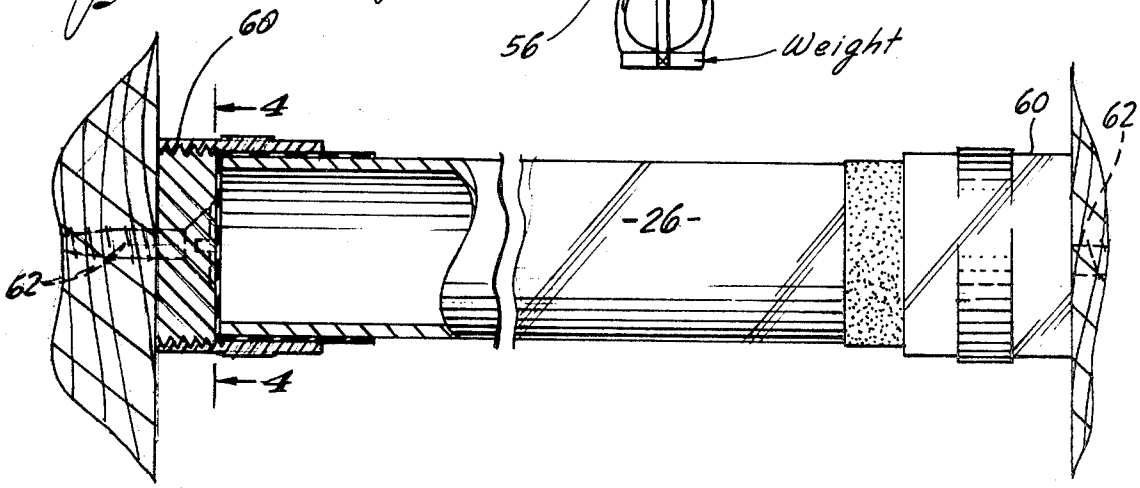

Fig. 4

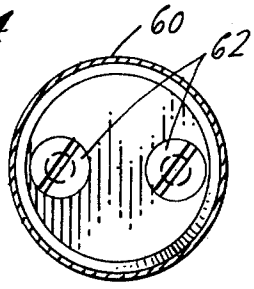

INVENTOR:
Victor Steele

By Smyth, Roston & Pavitt

ATTORNEYS

Fig. 5

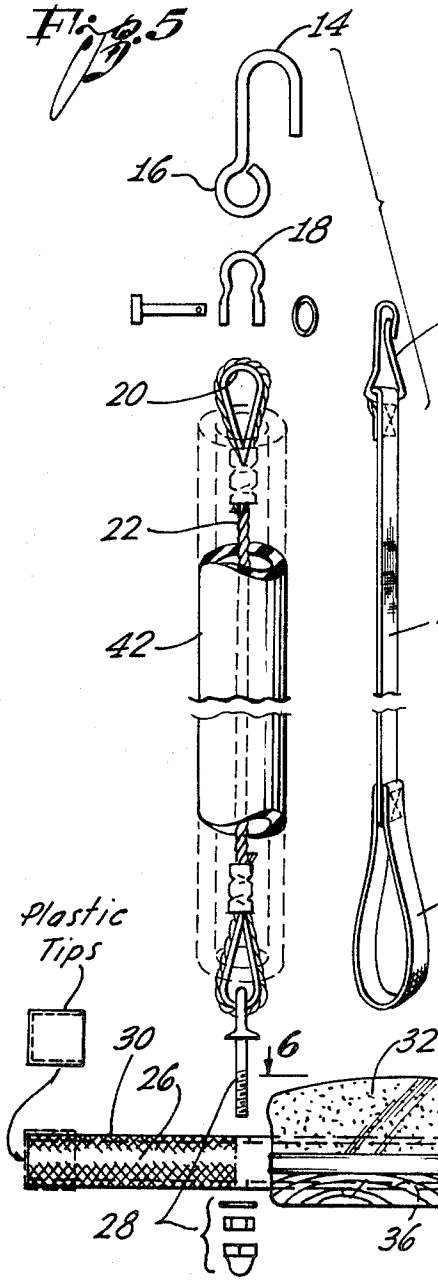

Fig. 7

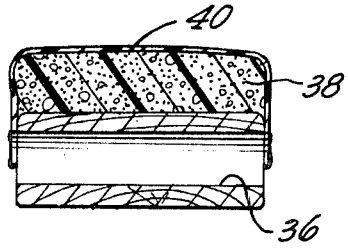

Fig. 8

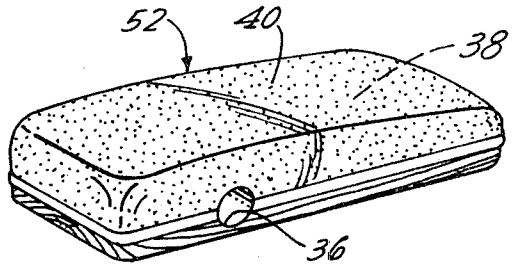

Fig. 9

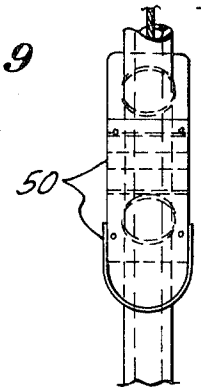

Fig. 10

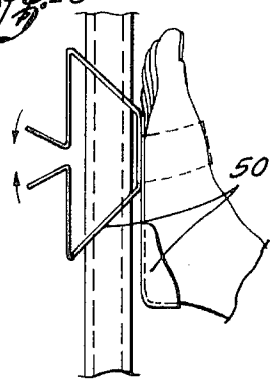

Fig. 6

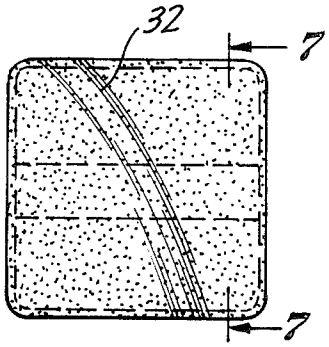

INVENTOR.
Victor Steele

By Smyth, Roston & Pavitt

ATTORNEYS

Fig. 11

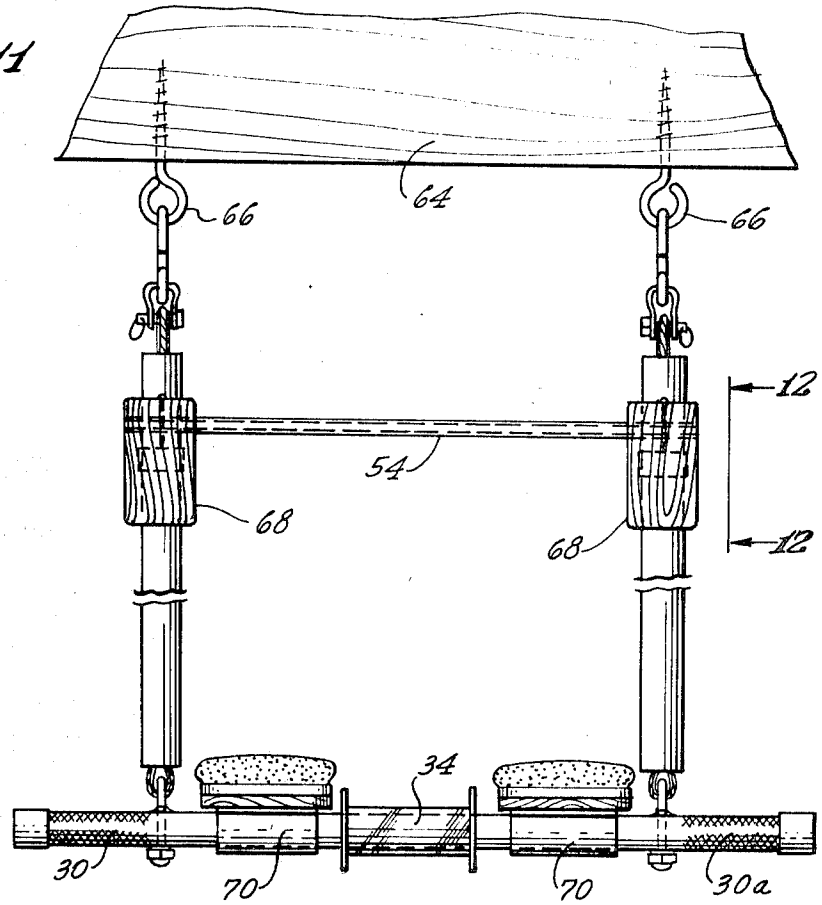

Fig. 12

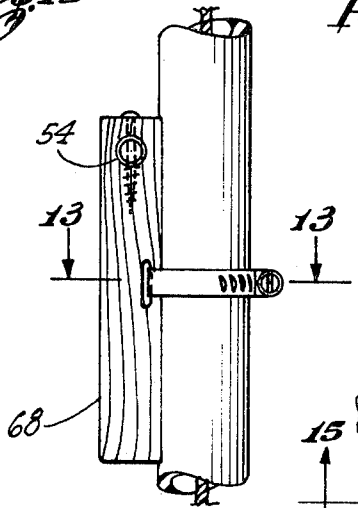

Fig. 13

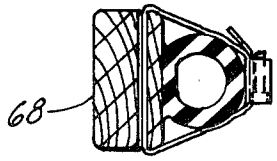

Fig. 16

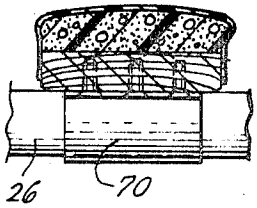

Fig. 14

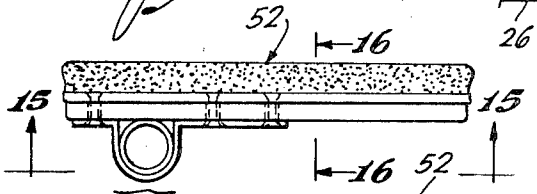

Fig. 15

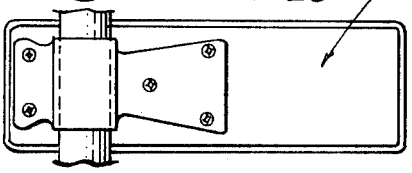

INVENTOR:
Victor Steele

By Smyth, Pastor & Pavitt

ATTORNEYS

Fig. 17

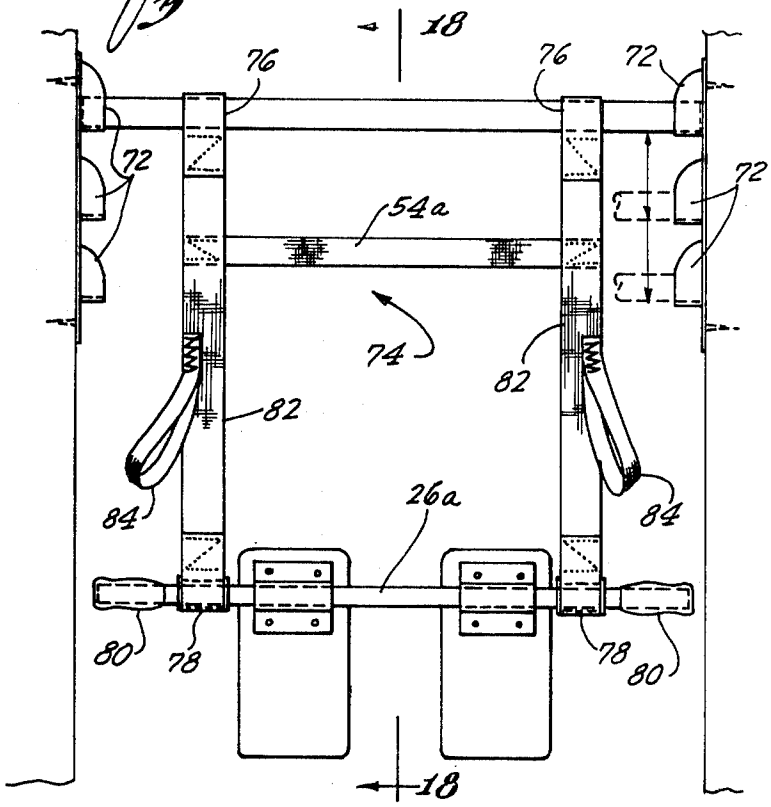

Fig. 18

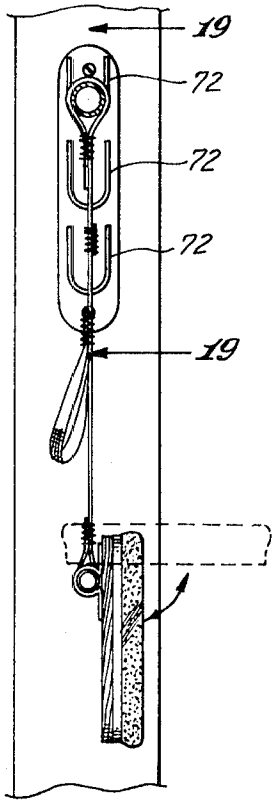

Fig. 19

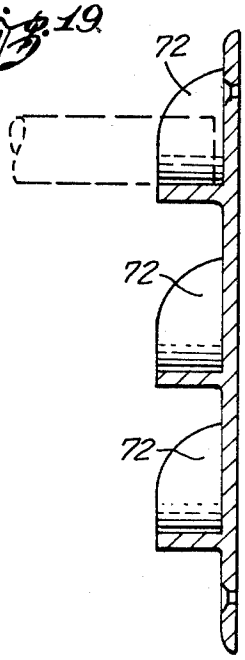

Fig. 20

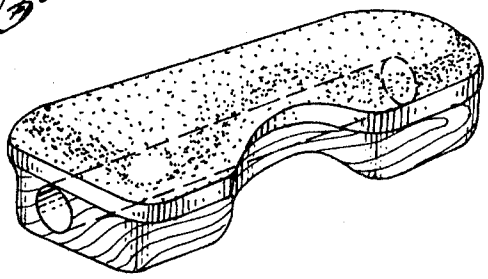

INVENTOR
Victor Steele

By Smyth, Lostaw & Lavitt
ATTORNEYS

BODY SUSPENSION DEVICE

BACKGROUND OF THE INVENTION

1. Field of the Invention

This invention relates to therapeutic devices in general and in particular to those which are designed to enable the human body to relieve itself of certain mechanical stresses which it develops through walking, standing and sitting in an erect or somewhat erect position. However, since this invention involves the use of a trapeze bar like that employed in the field of acrobatics, it also relates to devices utilized in that field as well. With the present invention, however, the basic trapeze bar is adapted to support the body weight relatively comfortably in an inverted body position for limited periods of time to provide natural traction and to relieve spinal compression which naturally occurs when the body is in its normal upright position.

2. Description of the Prior Art

As far as the medical field is concerned, traction is usually accomplished by providing various types of mechanical devices such as cables, pulleys, weights and cycling machines designed to apply a pulling force.

So far as known by the present inventor, prior to the present invention doctors prescribing traction treatment for patients have not recommended a trapeze-bar-type device for such treatment.

Trapeze bars are, of course, quite ancient in their use in acrobatics. However, they do not lend themselves to comfortably suspending a person in an inverted position with all his weight supported on his thighs since the entire body weight would be distributed over a very small area of the thighs in contact with the bar. For this reason, such trapeze bars have not been utilized for therapeutic purposes in treating back disorders.

SUMMARY OF THE INVENTION

The present invention permits a trapeze bar to be employed for treating back disorders by permitting the human body to be suspended in an inverted position by the leg thighs and stabilized by disposing the legs upwardly with the feet resting upon the pair of vertical elements which support the bar. This is accomplished by providing at least one rotatable platform on the bar one face of which platform is padded. By the use of this platform, the body weight is distributed over a much greater area than it would be were it all supported by the thighs resting on the bar itself. The padding further affords additional comfort by itself yielding under the pressure of the user's thigh muscles. To prevent the person, when mounting the bar from a standing position and swinging over it to the inverted position, from overswinging and possibly falling off, a transverse element is extended between the vertical elements above from the bar at approximately the level where the person's ankles would pass in an arc about the bar if overswinging should occur. In addition, since most people who would use the present invention are not acrobats, pullup loops are preferably provided on or in proximity to the vertical elements just above the bar in order to permit the person, when dismounting, the swing himself back about the bar to the standing position on the floor. Without such straps, the average person might find himself forced to dismount by swinging completely over the bar and to land on the floor in a sitting position.

BRIEF DESCRIPTION OF THE DRAWINGS

FIG. **1** is an elevational view of a doorway illustrating the manner in which a device of the present invention is set up and utilized.

FIG. **1***a* shows a collar with a weight which may be employed to provide additional traction.

FIG. **2** is a section taken on the line **2–2** of FIG. **1**.

FIG. **3** is an enlarged elevation, partly in section, illustrating one way of mounting the support bar.

FIG. **4** is a section on the line **4–4** of FIG. **3**.

FIG. **5** is an exploded and enlarged view of the left hand vertical support element and left side of the bar shown in FIG. **1**, together with a looped strap which may be used in association therewith.

FIG. **6** is a plan view of one of the blocks shown in FIG. **5**, looking in the direction of the arrows on the line **6–6** of that figure.

FIG. **7** is a section on the line **7–7** of FIG. **6**.

FIG. **8** is a perspective view of a modified form of padded block.

FIG. **9** is an elevation of a type of stirrup which may be provided on each vertical element shown in FIG. **1**.

FIG. **10** is a section taken on the line **10–10** of FIG. **9**.

FIG. **11** is an elevational view of another embodiment of the invention.

FIG. **12** is a fragmentary side elevation looking in the direction of the arrows **12–12** in FIG. **11**.

FIG. **13** is a section on the line **13–13** of FIG. **12**.

FIG. **14** is an elevational view, partly in section of one of the platform elements shown in FIG. **11**.

FIG. **15** is a bottom view, looking in the direction of the arrows **15–15** of FIG. **14**.

FIG. **16** is a section on the line **16–16** of FIG. **14**.

FIG. **17** is an elevation of a further embodiment of the invention.

FIG. **18** is a section on the line **18–18** of FIG. **17**.

FIG. **19** is a section on the line **19–19** of FIG. **17**.

FIG. **20** is a perspective view of an alternative supporting platform.

DESCRIPTION OF THE PREFERRED EMBODIMENTS

FIG. **1** illustrates the manner in which the preferred embodiment of the invention is set up and utilized. A cross-support bar **10** is secured between the sides of a door frame **12** and over this bar **10** are slipped two hooks **14**, **14***a*, the lower extremities of which are formed as eyes **16** to receive a locking fixture **18** securing the upper bight or loop **20** of a cable **22**. The cable **22** hangs downwardly about half the distance between the bar **10** and the floor **24**, and with another similar cable **22***a* supported by the other hook **14***a*, serves to support a trapeze-type transverse bar **26** by a stud-nut combination **28**. The bar is preferably knurled toward both ends at **30**, **30***a*. The bar **10**, before assembly, however, is passed through a pair of padded blocks **32**, **32***a*, separated by a tubular collar **34**. Each block **32**, **32***a* as shown in FIGS. **5**, **6** and **7**, is preferably made of wood, and is bored through at **36**.

One face of such block **32**, **32***a*, however, is provided with a foam rubber pad **38**, which is covered by a naugahyde or leather sheet **40**. Each cable **22** may be covered by a rubber or plastic sheath **42**. In addition, the bight or loop **16** of each cable **22**, **22***a* may serve to receive a clip fixture **44** which supports a looped pullup strap **46**. Optionally, there may be provided over the sheathed cable **22**, as shown in FIGS. **9** and **10**, a foot stirrup **50**. Although it is preferred that each block **32** be substantially square, as shown in FIG. **6**, an alternative form of the block could be rectangular, as is **52** in FIGS. **8**, **14** and **15**. Lastly, a crosspiece **54** may desirably be provided to extend between the upper portions of the cables **22**.

In use, a person approaches the bar from a standing position until both thighs of his legs come in contact with the padded faces of the blocks **32**, **32***a*. Although both blocks tend to rest with their padded faces **38** facing upwardly, the blocks **32**, **32***a* are rotatable on the bar **26**. Consequently, when a person's thighs are brought into contact with the blocks, the blocks may be rotated 90° to a vertical position, thereby to enable the person to be placed in contact with the padded faces **38** of the block. The person then grasps the knurled ends **30** and **30***a* of the bar **26** and swings his body over the bar until his feet strike either the sheathed cables **22**, **22***a* or the crosspiece **54**, whereupon the feet may be inserted in the stirrups **50** and the upper part of the body is then left to hang for a prescribed period, such as 2 or 3 minutes. This suspension of the body

will be found greatly to relieve the compressional stress to which the back skeleton is normally subjected through gravity when the human body is in its erect position. The natural traction may be further increased by providing a weighted collar **56** as shown in FIG. **1A**. In addition, if the back should require some heat treatment, a heating pad **58** may be strapped on prior to the person's mounting the bar. If the bar is mounted in sockets **60** which are secured to the doorjamb by heavy screws **62**, there will be no danger of the person pulling the bar **10** from its support position. When the person has suspended himself the proper length of time, he then grasps the loops **48** of the pullup straps **46** and rotates his body about the bar in the opposite direction until his feet again touched the floor.

In the alternative embodiments of the invention, shown in FIGS. **11** through **19**, a unit similar to that of the FIGS. **1** through **7** embodiment may be mounted without the use of the crossbar **10** directly into the upper transverse portion of the doorjamb **64** by heavy eye screws **66**. In lieu of the foot stirrups **50**, flat blocklike footrests **68** may be employed. In addition, in lieu of bored blocks, the blocks may be mounted on the bar **26*a*** by means of brackets **70**.

In the embodiment of FIGS. **17** through **18**, a series of U-shaped receptacles **72** are screwed into the wall and serve to receive the bar **10**, the purpose of these receptacles being to permit the bar to be raised or lowered depending upon whether the device is to be employed by a short or tall person. In addition, in this embodiment, in lieu of the supported cables **22**, there is provided a fabric-type support assembly **74**. This assembly may be fabricated of a material such as is employed for seat belts or cargo straps and may be put together with suitable end loops **76** and **78** to receive respectively the bars **10** and **26*a***. The latter bar may further be provided with bicycle-type handles **80** in lieu of the knurling **30**, **30*a*** of the bar **26** of FIGS. **1** through **7** embodiment. In addition, the crosspiece **54*a*** may be stitched directly to the vertical support **82** as may also pullups **84**.

It will be noted that in each of the several embodiments thus far described, thigh support has been provided by pairs of rotatable blocks. While these are to be preferred particularly to support a male, support could be provided by a single wide wooden platform as illustrated in FIG. **20**.

I claim:

1. A device for suspending the portion of a human body above the pelvis in an inverted position to provide natural traction and to relieve the spinal column of gravitational compression which occurs when the body is in its normal upright position, said device comprising:

a. a horizontal cylindrical trapeze bar;

b. a pair of parallel vertical elements, said elements being of equal length, being secured to hand from a location above the floor or ground at least as great as the height of an average male person, and being spaced from each other by a distance greater than the width of a human body in its pelvic region, the lower extremities of said elements being secured to said bar, and the upper ends of said elements being pivotally supported along an axis parallel to said bar to permit said elements and said bar to swing in an arc about said axis;

c. at least one platform member, said member being rotatably disposed on said bar and having at least one flat padded face, said face, when directed upwardly, serving to support the weight of a person's body when his upper thighs are brought into horizontal contact with said face and the portion of the body above the pelvic region is disposed in a pendant position downwardly from one side of said platform face, the legs of the body being bent back at the knees at an angle of approximately **45** degrees so that the sole of each foot may be placed in contact with one of said vertical elements.

2. The device as described in claim **1**, wherein a transverse element is provided to extend between the upper section of said vertical element, to prevent the person's legs from overswinging when mounting the device, in such a way that the person's feet pass beyond the vertical elements and thereby create the danger of a fall from the device.

3. The device as described in claim **2**, wherein looped straps are provided to hang above the bar outside the vertical elements, which straps may be grasped by the person while in an inverted suspended position, to aid such person in dismounting by swinging his body back to its normal upright position.

4. The device as described in claim **1**, wherein looped straps are provided to hang above the bar outside the vertical elements, which straps may be grasped by the person while in an inverted suspended position, to aid such person while in an inverted suspended position, to aid such person in dismounting by swinging his body back to its normal upright position.

5. The device as described in claim **4**, wherein the vertical elements, the transverse element and looped straps are all constructed of a heavy fabric and the straps are further stitched to the vertical elements.

6. The device as described in claim **1**, wherein the vertical elements each comprise a steel cable which are covered by a flexible resilient tubular shield.

7. The device as described in claim **1**, wherein two rotatably padded platform members as provided, said members being spaced from each other by a tubular collar by a sufficient distance to permit the thighs to rest on the padded faces of each said member.

8. The device as described in claim **1**, wherein the rotatable padded platform member is formed as a single wide block with a central cutout area to accommodate comfortably the male genitals.