(12) INTERNATIONAL APPLICATION PUBLISHED UNDER THE PATENT COOPERATION TREATY (PCT)

(19) World Intellectual Property Organization
International Bureau

(43) International Publication Date
25 July 2013 (25.07.2013)

WIPO | PCT

(10) International Publication Number
WO 2013/107680 A3

(51) International Patent Classification:
B65B 55/10 (2006.01) *B67C 7/00* (2006.01)

(21) International Application Number:
PCT/EP2013/050360

(22) International Filing Date:
10 January 2013 (10.01.2013)

(25) Filing Language: English

(26) Publication Language: English

(30) Priority Data:
1250020-3 16 January 2012 (16.01.2012) SE

(71) Applicant: **TETRA LAVAL HOLDINGS & FINANCE S.A.** [CH/CH]; 70, Avenue Général-Guisan, CH-1009 Pully (CH).

(72) Inventors: **KEIKHAEE, Manoochehr**; Sadelmakare byn 7A, S-281 40 Bunkeflostrand (SE). **NYSTRÖM, Rasmus**; Sävstaholmsgatan 4, S-212 24 Malmö (SE). **RIIS MÖRK, Jörgen**; Äblehaven 16, DK-4390 Vipperöd (DK).

(74) Agent: **ASSOCIATION "TETRA PAK - ATTORNEYS SE"**; AB Tetra Pak, Patent Department, Ruben Rausings gata, S-221 86 Lund (SE).

(81) Designated States *(unless otherwise indicated, for every kind of national protection available)*: AE, AG, AL, AM, AO, AT, AU, AZ, BA, BB, BG, BH, BN, BR, BW, BY, BZ, CA, CH, CL, CN, CO, CR, CU, CZ, DE, DK, DM, DO, DZ, EC, EE, EG, ES, FI, GB, GD, GE, GH, GM, GT, HN, HR, HU, ID, IL, IN, IS, JP, KE, KG, KM, KN, KP, KR, KZ, LA, LC, LK, LR, LS, LT, LU, LY, MA, MD, ME, MG, MK, MN, MW, MX, MY, MZ, NA, NG, NI, NO, NZ, OM, PA, PE, PG, PH, PL, PT, QA, RO, RS, RU, RW, SC, SD, SE, SG, SK, SL, SM, ST, SV, SY, TH, TJ, TM, TN, TR, TT, TZ, UA, UG, US, UZ, VC, VN, ZA, ZM, ZW.

(84) Designated States *(unless otherwise indicated, for every kind of regional protection available)*: ARIPO (BW, GH, GM, KE, LR, LS, MW, MZ, NA, RW, SD, SL, SZ, TZ, UG, ZM, ZW), Eurasian (AM, AZ, BY, KG, KZ, RU, TJ, TM), European (AL, AT, BE, BG, CH, CY, CZ, DE, DK, EE, ES, FI, FR, GB, GR, HR, HU, IE, IS, IT, LT, LU, LV, MC, MK, MT, NL, NO, PL, PT, RO, RS, SE, SI, SK, SM, TR), OAPI (BF, BJ, CF, CG, CI, CM, GA, GN, GQ, GW, ML, MR, NE, SN, TD, TG).

Published:

— *with international search report (Art. 21(3))*

— *before the expiration of the time limit for amending the claims and to be republished in the event of receipt of amendments (Rule 48.2(h))*

(88) Date of publication of the international search report:
19 September 2013

(54) Title: STERILIZATION UNIT AND METHOD FOR A FILLING MACHINE

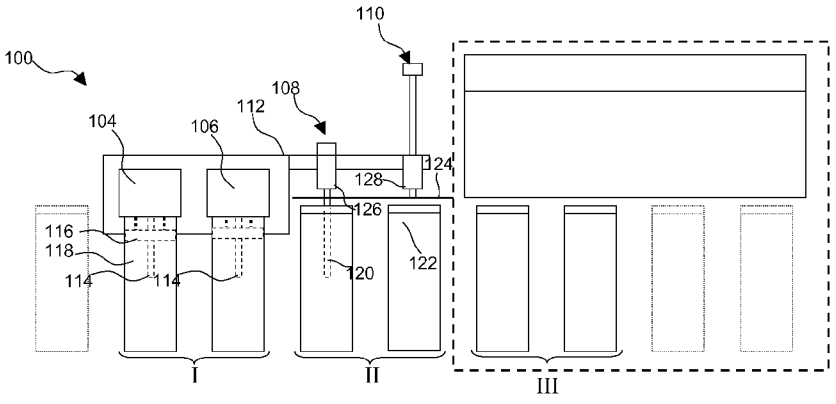

Fig. 2

(57) Abstract: A sterilization unit (100, 108, 110) comprises at least one nozzle pipe (120, 122) for injection of a sterilization agent into a packaging container (102) to be sterilized. The sterilization unit is driven to move in an axial direction, in a downward stroke and an upward stroke, corresponding to a longitudinal direction of the nozzle pipe (120, 122) such that it is inserted into an open end of the packaging container (102) during sterilization thereof. The nozzle pipe (120, 122) is suspended such as to be displaceable in relation to the sterilization unit (100, 108, 110), in the axial direction.

WO 2013/107680 A3

INTERNATIONAL SEARCH REPORT

International application No
PCT/EP2013/050360

A. CLASSIFICATION OF SUBJECT MATTER
INV. B65B55/10
ADD. B67C7/00

According to International Patent Classification (IPC) or to both national classification and IPC

B. FIELDS SEARCHED

Minimum documentation searched (classification system followed by classification symbols)
B65B B67C

Documentation searched other than minimum documentation to the extent that such documents are included in the fields searched

Electronic data base consulted during the international search (name of data base and, where practicable, search terms used)
EPO-Internal

C. DOCUMENTS CONSIDERED TO BE RELEVANT

Category*	Citation of document, with indication, where appropriate, of the relevant passages	Relevant to claim No.
A	EP 1 220 787 B1 (GEA FINNAH) 17 September 2003 (2003-09-17) column 2, line 7 - column 3, line 23; figures	1
A	EP 0 394 734 A1 (TETRA PAK HOLDINGS & FINANCE) 31 October 1990 (1990-10-31) column 4, line 1 - column 5, line 21; figures	1
A	EP 0 597 355 A2 (TETRA LAVAL HOLDINGS & FINANCE) 18 May 1994 (1994-05-18) column 5, line 29 - column 7, line 3; figures	1
A	WO 2009/016500 A1 (A.C.M.A.) 5 February 2009 (2009-02-05) page 5, line 28 - page 6, line 23; figures	1

-/--

[X] Further documents are listed in the continuation of Box C.

[X] See patent family annex.

* Special categories of cited documents :

"A" document defining the general state of the art which is not considered to be of particular relevance

"E" earlier application or patent but published on or after the international filing date

"L" document which may throw doubts on priority claim(s) or which is cited to establish the publication date of another citation or other special reason (as specified)

"O" document referring to an oral disclosure, use, exhibition or other means

"P" document published prior to the international filing date but later than the priority date claimed

"T" later document published after the international filing date or priority date and not in conflict with the application but cited to understand the principle or theory underlying the invention

"X" document of particular relevance; the claimed invention cannot be considered novel or cannot be considered to involve an inventive step when the document is taken alone

"Y" document of particular relevance; the claimed invention cannot be considered to involve an inventive step when the document is combined with one or more other such documents, such combination being obvious to a person skilled in the art

"&" document member of the same patent family

Date of the actual completion of the international search	Date of mailing of the international search report
26 April 2013	30/07/2013

Name and mailing address of the ISA/	Authorized officer
European Patent Office, P.B. 5818 Patentlaan 2 NL - 2280 HV Rijswijk Tel. (+31-70) 340-2040, Fax: (+31-70) 340-3016	Jagusiak, Antony

2

Form PCT/ISA/210 (second sheet) (April 2005)

INTERNATIONAL SEARCH REPORT

International application No
PCT/EP2013/050360

C(Continuation). DOCUMENTS CONSIDERED TO BE RELEVANT

Category*	Citation of document, with indication, where appropriate, of the relevant passages	Relevant to claim No.
A	US 6 692 684 B1 (TETRA LAVAL HOLDINGS & FINANCE) 17 February 2004 (2004-02-17) column 6, line 11 - line 67; figures	1

INTERNATIONAL SEARCH REPORT

International application No.
PCT/EP2013/050360

Box No. II Observations where certain claims were found unsearchable (Continuation of item 2 of first sheet)

This international search report has not been established in respect of certain claims under Article 17(2)(a) for the following reasons:

1. ☐ Claims Nos.:
because they relate to subject matter not required to be searched by this Authority, namely:

2. ☐ Claims Nos.:
because they relate to parts of the international application that do not comply with the prescribed requirements to such an extent that no meaningful international search can be carried out, specifically:

3. ☐ Claims Nos.:
because they are dependent claims and are not drafted in accordance with the second and third sentences of Rule 6.4(a).

Box No. III Observations where unity of invention is lacking (Continuation of item 3 of first sheet)

This International Searching Authority found multiple inventions in this international application, as follows:

see additional sheet

1. ☐ As all required additional search fees were timely paid by the applicant, this international search report covers all searchable claims.

2. ☐ As all searchable claims could be searched without effort justifying an additional fees, this Authority did not invite payment of additional fees.

3. ☐ As only some of the required additional search fees were timely paid by the applicant, this international search report covers only those claims for which fees were paid, specifically claims Nos.:

4. ☒ No required additional search fees were timely paid by the applicant. Consequently, this international search report is restricted to the invention first mentioned in the claims; it is covered by claims Nos.:

see additional sheet(s)

Remark on Protest

☐ The additional search fees were accompanied by the applicant's protest and, where applicable, the payment of a protest fee.

☐ The additional search fees were accompanied by the applicant's protest but the applicable protest fee was not paid within the time limit specified in the invitation.

☐ No protest accompanied the payment of additional search fees.

FURTHER INFORMATION CONTINUED FROM PCT/ISA/ 210

This International Searching Authority found multiple (groups of) inventions in this international application, as follows:

1. claims: 1-7

   Sterilization unit for a filling machine provided with a suspended nozzle pipe.

   ---

2. claims: 8-10

   Method for sterilizing a packaging container by means of a nozzle pipe.

INTERNATIONAL SEARCH REPORT

Information on patent family members

International application No
PCT/EP2013/050360

Patent document cited in search report	Publication date	Patent family member(s)	Publication date
EP 1220787 B1	17-09-2003	AT 249971 T	15-10-2003
		DE 19949692 A1	19-04-2001
		DK 1220787 T3	26-01-2004
		EP 1220787 A1	10-07-2002
		ES 2208422 T3	16-06-2004
		JP 2003512260 A	02-04-2003
		WO 0128863 A1	26-04-2001
EP 394734 A1	31-10-1990	AT 118356 T	15-03-1995
		AU 622792 B2	16-04-1992
		AU 5380090 A	01-11-1990
		CA 2014398 A1	25-10-1990
		DE 69016819 D1	23-03-1995
		DE 69016819 T2	08-06-1995
		DK 0394734 T3	10-04-1995
		EP 0394734 A1	31-10-1990
		ES 2068271 T3	16-04-1995
		GR 3015452 T3	30-06-1995
		JP 2912675 B2	28-06-1999
		JP H0363056 A	19-03-1991
		SE 500355 C2	06-06-1994
		SE 8901498 A	26-10-1990
EP 597355 A2	18-05-1994	AT 161787 T	15-01-1998
		AU 666049 B2	25-01-1996
		AU 5041493 A	19-05-1994
		CA 2109390 A1	10-05-1994
		CZ 9302384 A3	18-05-1994
		DE 69316161 D1	12-02-1998
		DE 69316161 T2	18-06-1998
		EP 0597355 A2	18-05-1994
		FI 934938 A	10-05-1994
		JP H072203 A	06-01-1995
		JP 2642854 B2	20-08-1997
		NO 934038 A	10-05-1994
		RU 2134221 C1	10-08-1999
		US 5350568 A	27-09-1994
		US 5445793 A	29-08-1995
WO 2009016500 A1	05-02-2009	CN 101772456 A	07-07-2010
		EP 2170710 A1	07-04-2010
		US 2010199605 A1	12-08-2010
		WO 2009016500 A1	05-02-2009
US 6692684 B1	17-02-2004	AU 3856299 A	25-10-1999
		BR 9909454 A	12-12-2000
		CN 1295525 A	16-05-2001
		DE 69927151 D1	13-10-2005
		DE 69927151 T2	22-06-2006
		EP 1086019 A1	28-03-2001
		ES 2245509 T3	01-01-2006
		JP 2002510585 A	09-04-2002
		RU 2220080 C2	27-12-2003
		SE 511861 C2	06-12-1999
		SE 9801217 A	08-10-1999
		TW 440518 B	16-06-2001
		US 6692684 B1	17-02-2004
		WO 9951497 A1	14-10-1999

INTERNATIONAL SEARCH REPORT

Information on patent family members

International application No
PCT/EP2013/050360

Patent document cited in search report	Publication date	Patent family member(s)	Publication date

---