(No Model.) 2 Sheets—Sheet 1.

E. E. RENSHAW & T. J. CLANAHAN.

PLOW.

No. 456,522. Patented July 21, 1891.

Fig. 1.

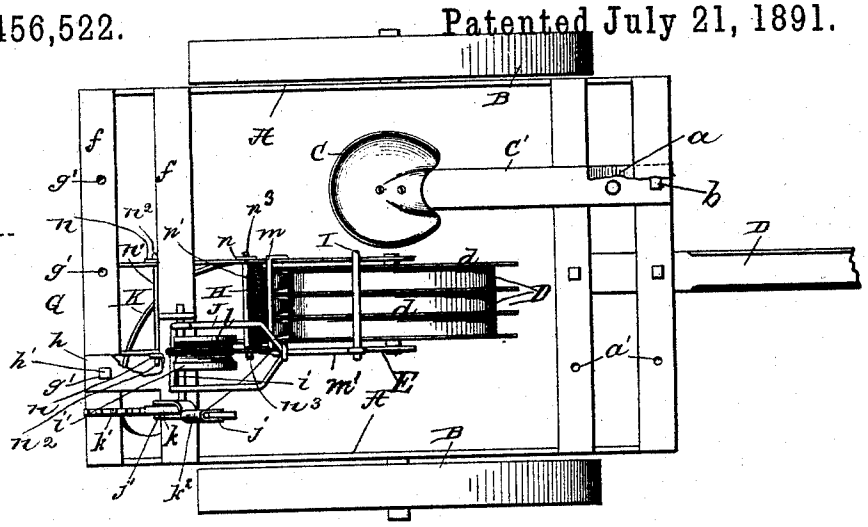

Fig. 2.

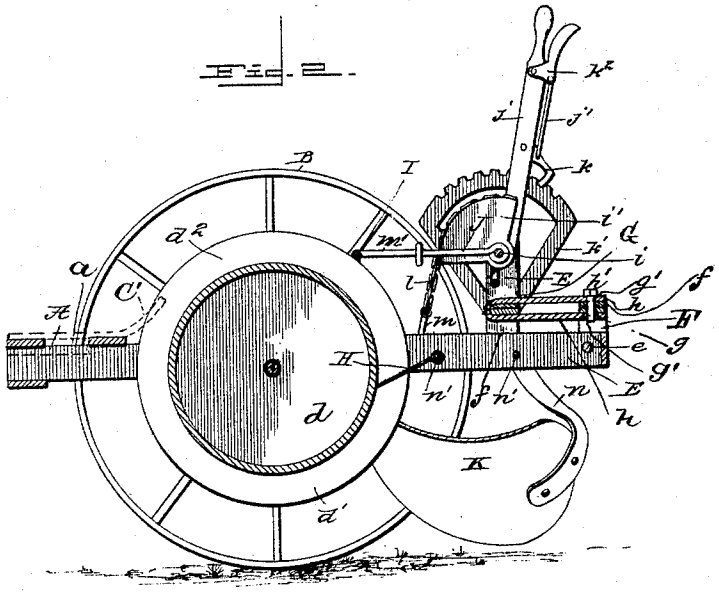

Witnesses
Myer Myers
Josef A. Hogmann

Inventor
Elmer E. Renshaw
Thomas J. Clanahan
By their Attorneys.
Myers & Co

THE NORRIS PETERS CO., PHOTO-LITHO., WASHINGTON, D. C.

(No Model.) 2 Sheets—Sheet 2.

E. E. RENSHAW & T. J. CLANAHAN.

PLOW.

No. 456,522. Patented July 21, 1891.

Fig. 2.

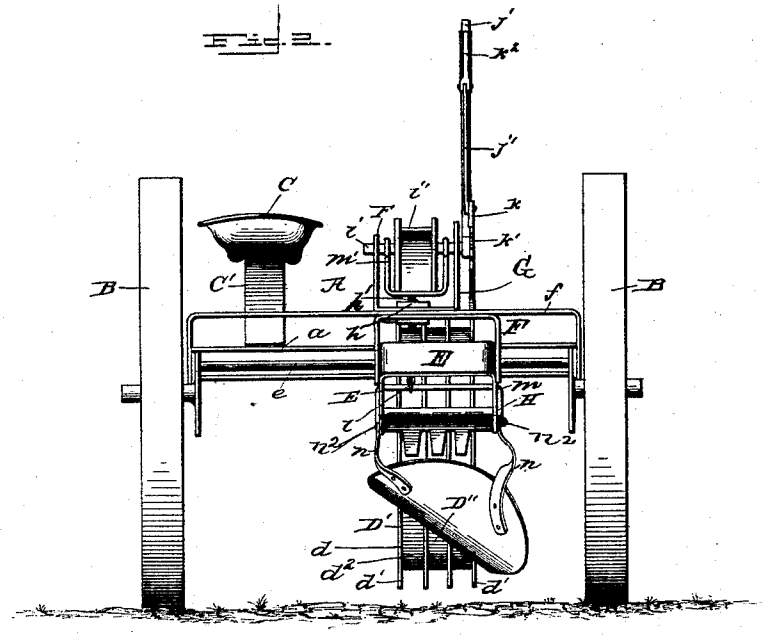

Fig. 5.

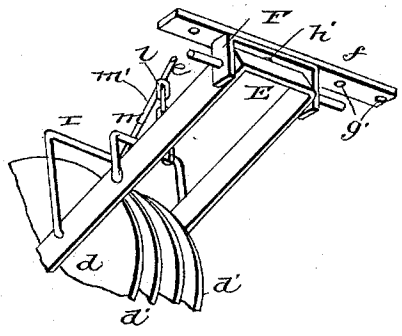

Fig. 4.

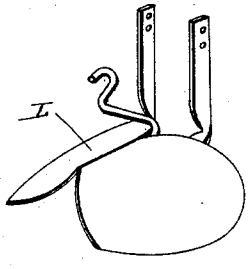

Witnesses
Mercer Myers
Josef A. Hagmann

Inventor
Elmer E. Renshaw
Thomas J. Clanahan
By their Attorneys.
Myers & Co

THE NORRIS PETERS CO., PHOTO-LITHO., WASHINGTON, D. C.

UNITED STATES PATENT OFFICE.

ELMER E. RENSHAW AND THOMAS J. CLANAHAN, OF GOLCONDA, ILLINOIS.

PLOW.

SPECIFICATION forming part of Letters Patent No. 456,522, dated July 21, 1891.

Application filed October 29, 1890. Serial No. 369,695. (No model.)

To all whom it may concern:

Be it known that we, ELMER E. RENSHAW and THOMAS J. CLANAHAN, citizens of the United States of America, residing at Golconda, in the county of Pope and State of Illinois, have invented certain new and useful Improvements in Plows, of which the following is a specification, reference being had therein to the accompanying drawings.

Our invention relates to certain improvements in plows; and it consists in the detailed construction and combination of parts hereinafter disclosed.

In the accompanying drawings, illustrating our invention, Figure 1 is a plan view, Fig. 2 a sectional elevation, Fig. 3 a rear elevation, and Fig. 4 a detached view, of a modified form of shovel-plow. Fig. 5 is a detail view illustrating more fully the plow-carrying frame and its adjunctive parts, including the adjusting-yoke and co-operative parts.

In carrying out our invention we provide a frame A, mounted upon axles and wheels B, in sulky style, mounting the driver's seat C adjustably thereon—*i. e.*, so as to be shifted from one side to the other of the tongue D or line of draft. To this end the supporting spring-bar C′ of the seat C has at its lower end a keeper or loop *a*, through coincident apertures *a′* in which and the front cross-bar of the frame A is inserted a pin or bolt *b*.

D is the plow, of the rotary pattern, comprising a series of circular plates or disks *d d*, suitably spaced apart and extending beyond and forming peripherical flanges *d′* upon the periphery of the drum or cylinder D′, thus providing annular interspaces *d²* to receive and carry the dirt loosened by the cutting action of said flanges as they penetrate the ground. This form of plow avoids the pressure or strain resulting in the use of the ordinary mold-board plow. The plow D is rotatably hung upon an axis or studs at its center, engaging or bearing in the side bars or arms of a frame E at their inner ends, the upper end of said frame being pivoted upon and also having a sliding connection with a rod *e*, secured in the side bars of frame A at their rear ends.

Embracing or standing astride of the upper end of the frame E, and also adapted to slide on the rod *e* and with the said frame, is a yoke F, having an adjustable connection with one of the rear cross-bars *f f* of said frame, said yoke having an opening *g*, adapted to register with coincident openings *g′* in said rear cross-bar and in the rearwardly-extending portions of the keeper *h* of the plow-adjusting-lever support G. A pin or bolt *h′*, passed through or engaging the openings *g g′*, holds the yoke at its point of adjustment, together with the plow-adjusting-lever support, in the center of the carrying-frame A or at either side thereof, according as the plow is slid near to and with the right wheel traveling in the furrow, as in first going over the ground, or with the plow slid near the left-hand wheel, as in "ridge-plowing."

Held in the plow-carrying frame E is a spring-metal notched scraper H, having tongues fitting or projecting into the annular interspaces of the plow D, thus adapting it to remove the adhering dirt from said interspaces.

Upon the support G is carried a shaft *i*, to which is fixed a segment *i′*, and to one end of said shaft is secured a hand-lever *j*, having a pawl *k*, adapted to engage a segmental rack *k′*, a fixture of said support. The pawl *k* has connected to it by a link or rod *j′* an actuating spring-pressed lever *k²*, pivoted upon the lever *j* and so arranged as to be conveniently operated by the hand as the latter lever is grasped for operation.

L is a chain connected to the upper edge of the segment *i′* and resting in the grooved face of said segment and connecting with a bail *m*, fixed to the plow-carrying frame E, by means of which and the actuation of the lever *j* the plow is capable of adjustment to and from the ground and of being held elevated.

I is a vertical bail, also affixed to the plow-carrying frame E, and having connected to its upper end a right-angled bail J by a forwardly-extending arm *m′* thereof. One arm of the right-angled bail J rests against the rear side of the segment *i′* when the plow is at work or depressed. Therefore the tendency of the plow to be forced upwardly by resistance from the ground is prevented.

K is the mold-board arranged at the rear and just touching the periphery of the plow to direct or discharge the dirt removed from the latter to one side of the forming furrow.

The mold-board is connected by three arms $n\,n$, two adapted to engage either two of the end projections $n^2\,n^3$ of bracing-rods $n'\,n'$ of the frame E, according as the mold-board may be adjusted to discharge to one side or the other of the furrow. The other arm of the mold-board is adapted accordingly to engage either one or the other of the end projections $n^2\,n^2$ of one (the upper one) of the bracing-rods n'.

In lieu of this mold-board may be used the mold-board L, adapted to discharge the dirt to both sides of the furrow at the same operation.

Having thus fully described our invention, we claim—

1. The rotary plow, in combination with the carrying-frame pivoted to and adapted to slide laterally upon a rod of the supporting-frame of the machine, substantially as set forth.

2. The rotary plow, in combination with the carrying-frame having a pivoted and a sliding connection with a rod of the supporting-frame, the yoke pivoted or bolted to said carrying-frame, and the adjusting-lever support having a sliding connection with the supporting-frame, substantially as specified.

3. In a rotary plow, the combination, with the plow-carrying frame having a pivoted and sliding connection with a rod of the supporting-frame, and the yoke embracing the upper end of said carrying-frame, of the adjusting-lever and its support having a rearwardly-extending keeper adapted to be connected to said yoke and carrying-frame, substantially as set forth.

4. In a rotary plow, the combination, with the plow-carrying frame, of the fixed bail linked or connected to a right-angled bail, the plow-carrying frame, and the adjusting-lever fixed to a shaft carrying a fixed chain-actuating segment, one arm of said right-angled lever adapted to rest against the rear edge of said segment, substantially as described.

5. In a rotary plow, the combination, with the disk-shaped cutting-plow and the scraper, of the mold-board having arms having interchangeable connection with end projections on opposite sides of the supporting-frame, substantially as specified.

In testimony whereof we affix our signatures in presence of two witnesses.

ELMER E. RENSHAW.
THOMAS J. CLANAHAN.

Witnesses:
W. H. ROSE,
J. T. CUMMINS.