US 20120197389A1

(19) **United States**

(12) **Patent Application Publication**

(10) **Pub. No.: US 2012/0197389 A1**

(43) **Pub. Date: Aug. 2, 2012**

**Alferness et al.**

(54) **DEVICE AND METHOD FOR MODIFYING THE SHAPE OF A BODY ORGAN**

(76) Inventors: **Clifton A. Alferness**, Redmond, WA (US); **John M. Adams**, Sammamish, WA (US); **Mark L. Mathis**, Fremont, CA (US); **David G. Reuter**, Bothell, WA (US); **Cruz Beeson**, Kirkland, WA (US); **Leonard Kowalsky**, Bothell, WA (US)

(21) Appl. No.: **13/443,709**

(22) Filed: **Apr. 10, 2012**

**Related U.S. Application Data**

(60) Division of application No. 12/719,758, filed on Mar. 8, 2010, now Pat. No. 8,172,898, which is a continuation of application No. 11/467,105, filed on Aug. 24, 2006, now Pat. No. 7,674,287, which is a continuation of application No. 10/429,171, filed on May 2, 2003, now Pat. No. 7,179,282.

**Publication Classification**

(51) **Int. Cl.**
*A61F 2/24* (2006.01)

(52) **U.S. Cl.** ..... **623/2.11**

(57) **ABSTRACT**

An intravascular support device includes a support or reshaper wire, a proximal anchor and a distal anchor. The support wire engages a vessel wall to change the shape of tissue adjacent the vessel in which the intravascular support is placed. The anchors and support wire are designed such that the vessel in which the support is placed remains open and can be accessed by other devices if necessary. The device provides a minimal metal surface area to blood flowing within the vessel to limit the creation of thrombosis. The anchors can be locked in place to secure the support within the vessel.

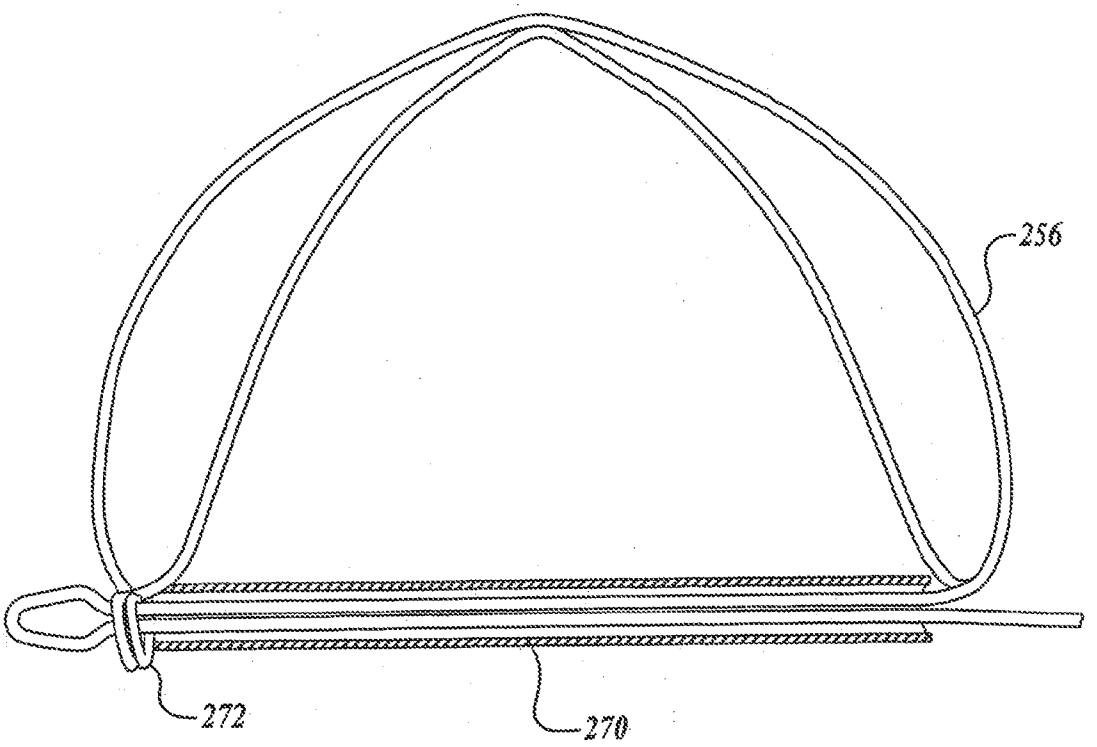

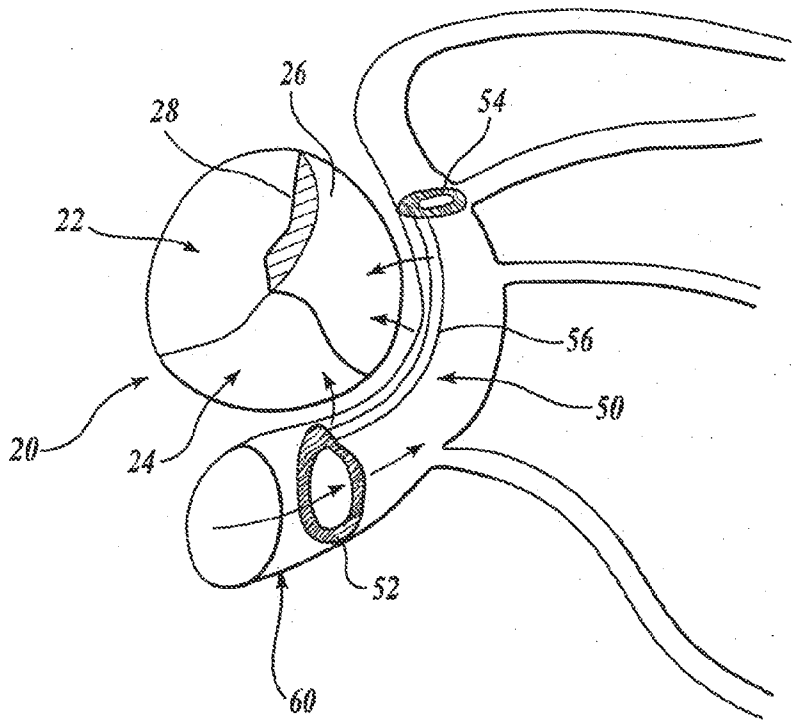


*Fig.1.*

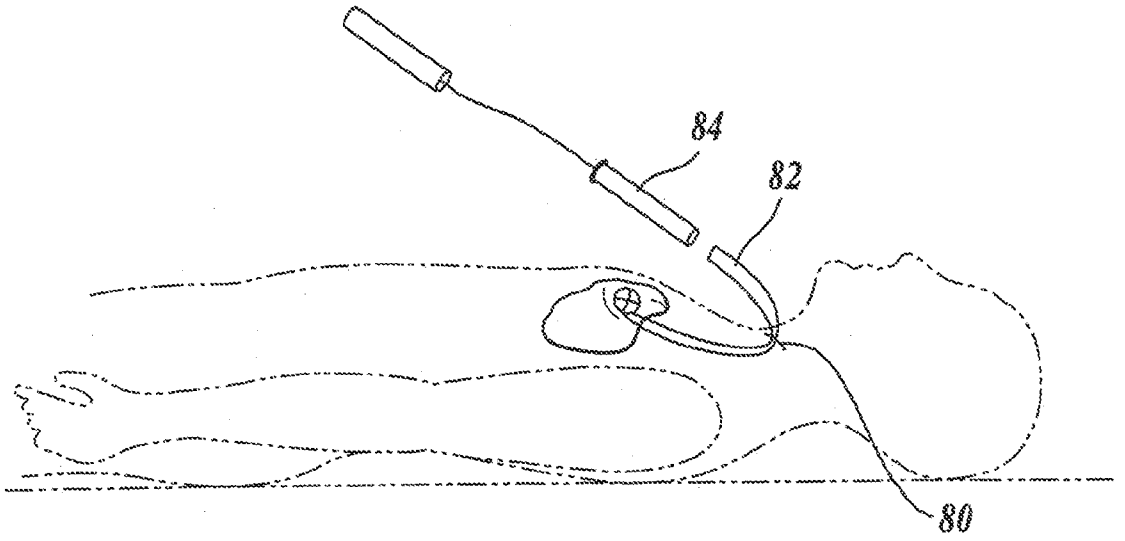


*Fig.2.*

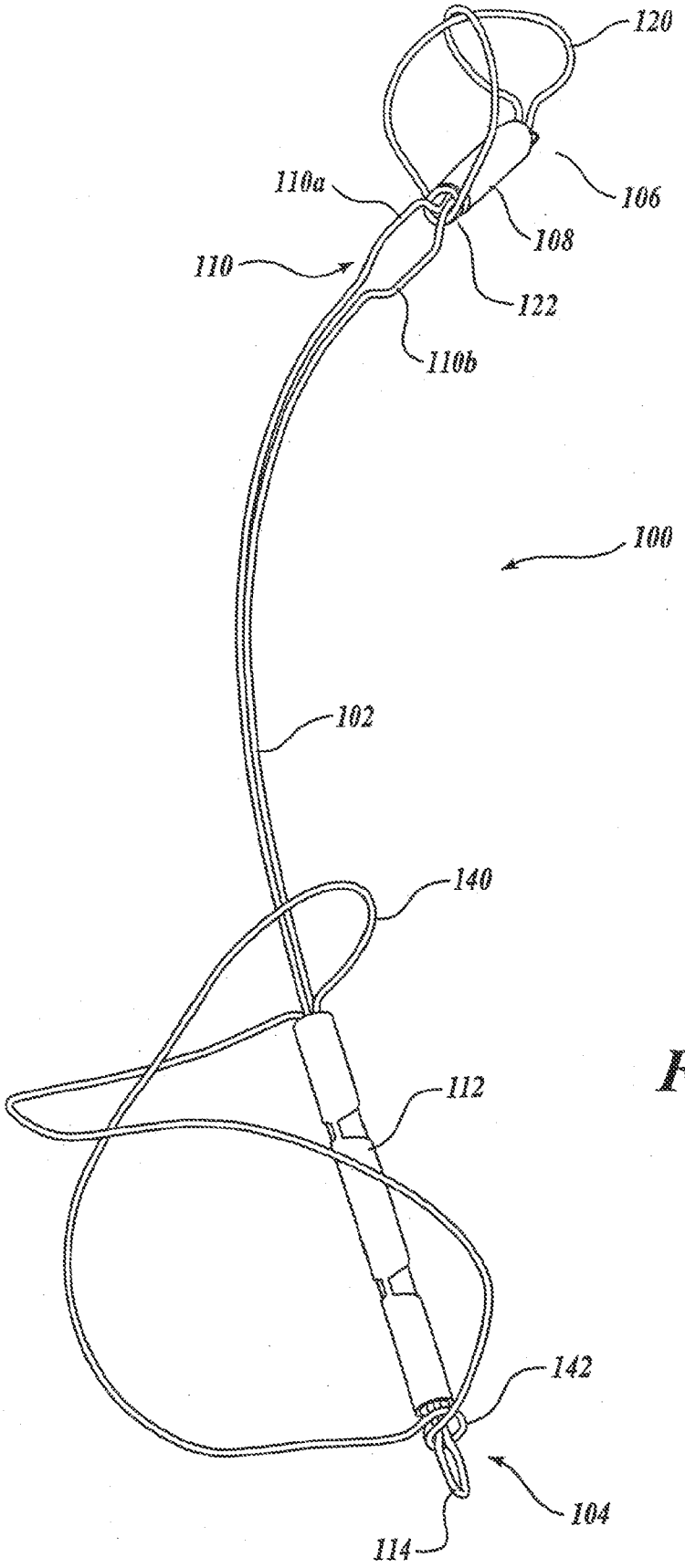


Fig.3.

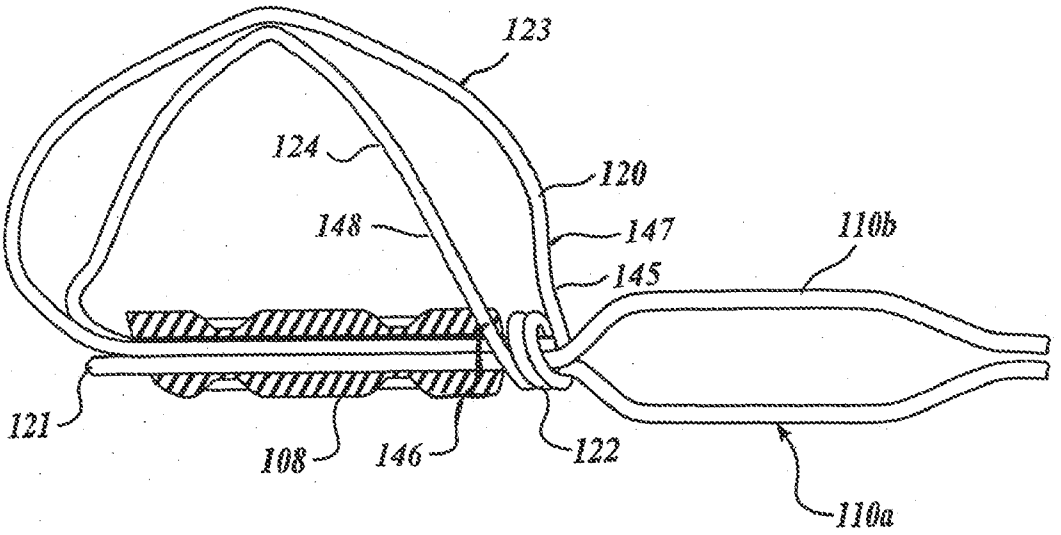


*Fig. 4.*

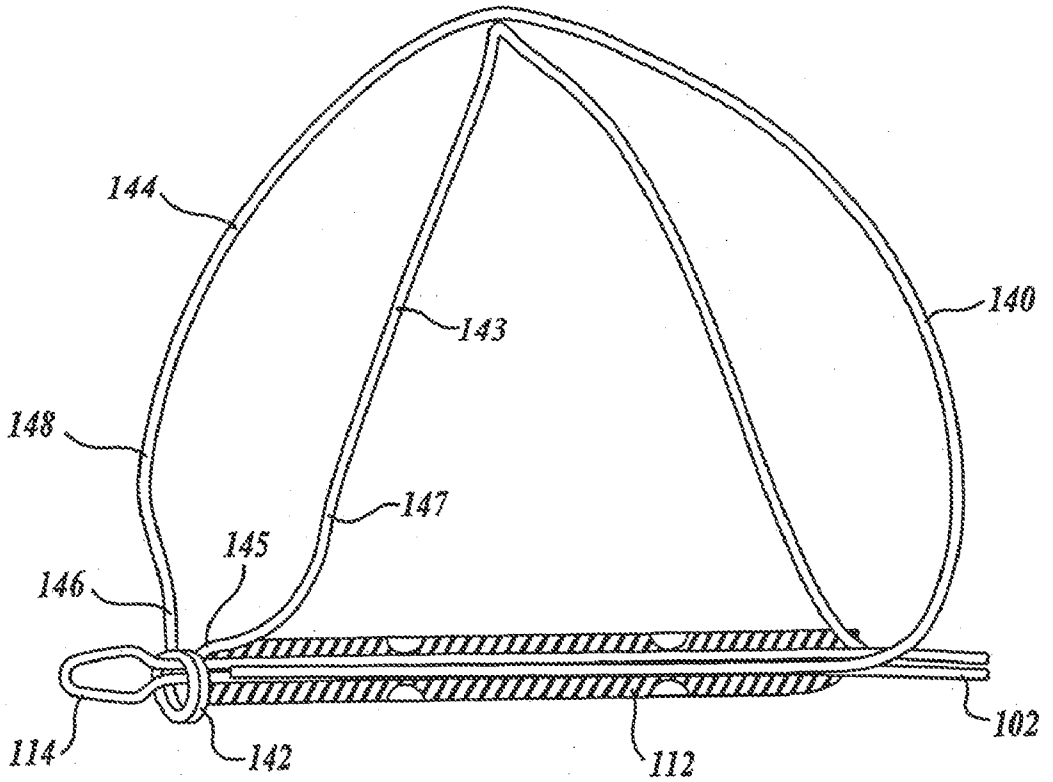


*Fig. 5.*

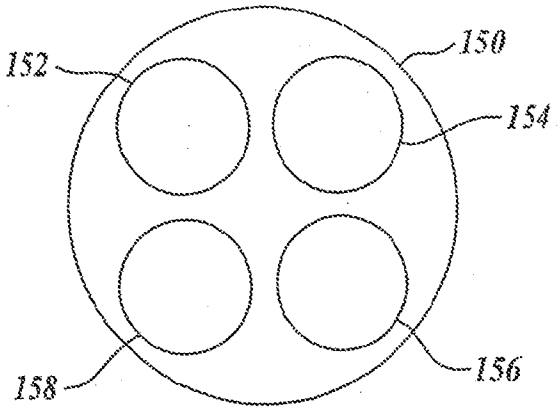


Fig.6A.

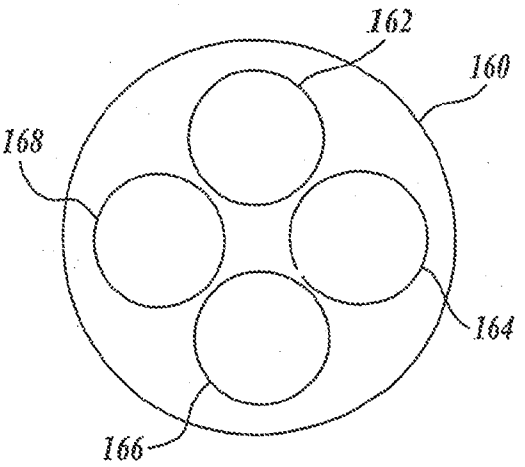


Fig.6B.

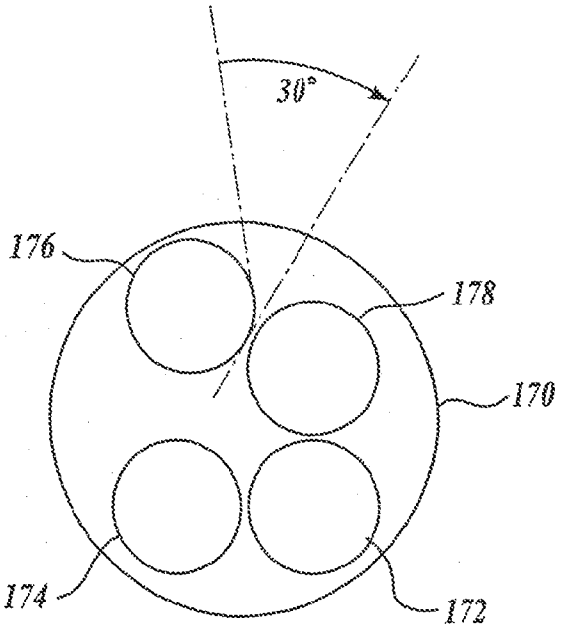


Fig.6C.

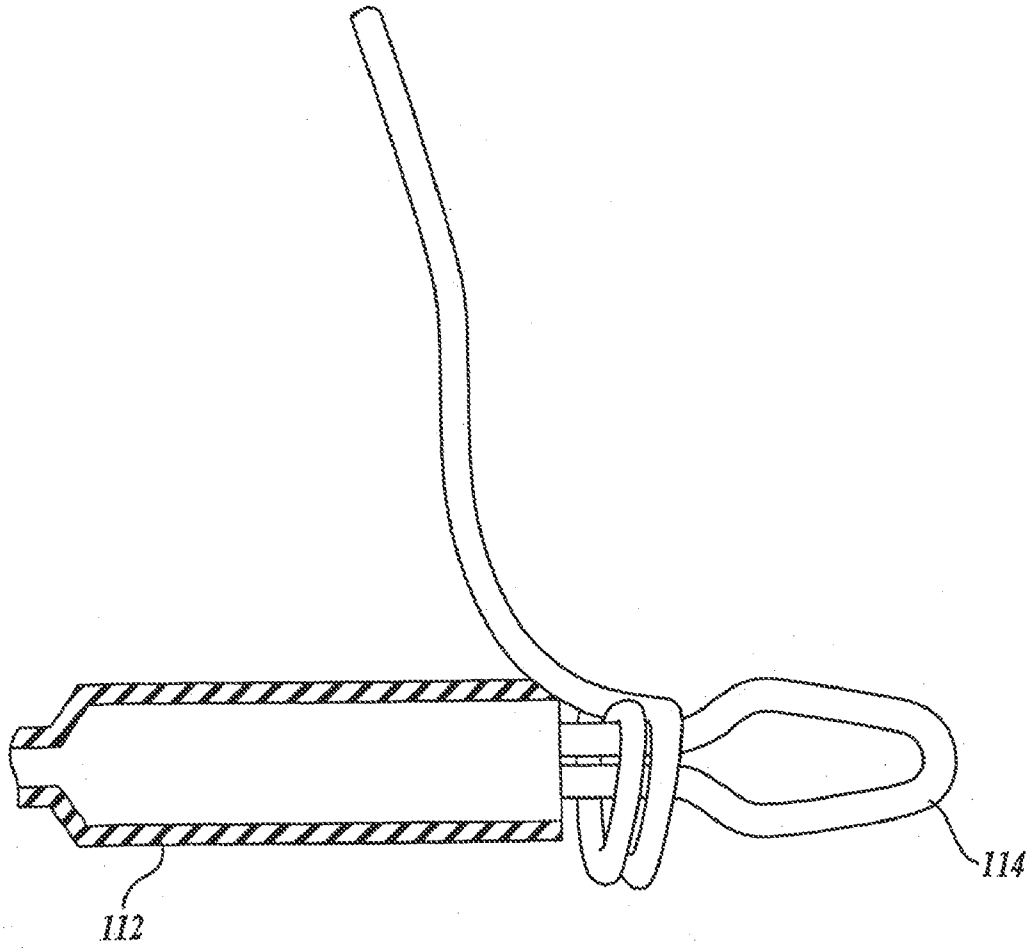


*Fig. 7.*

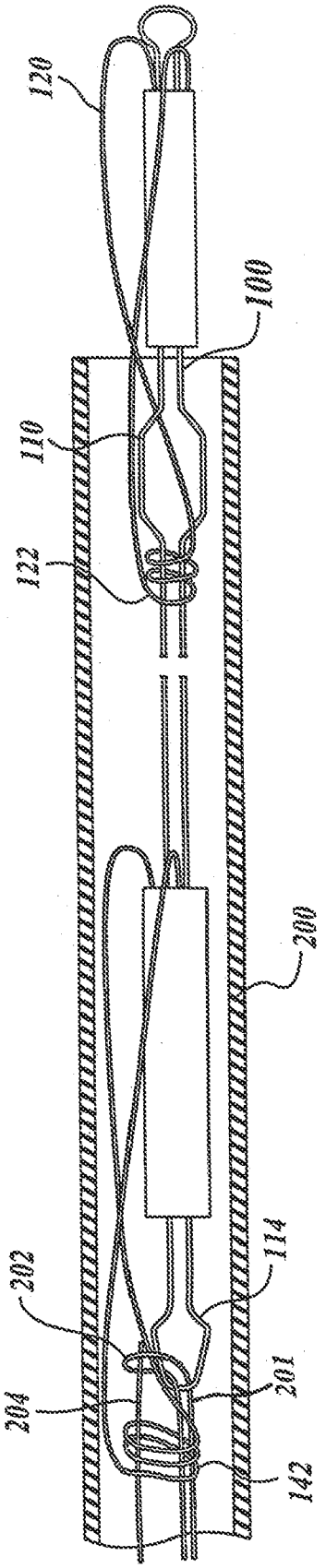


Fig. 8.

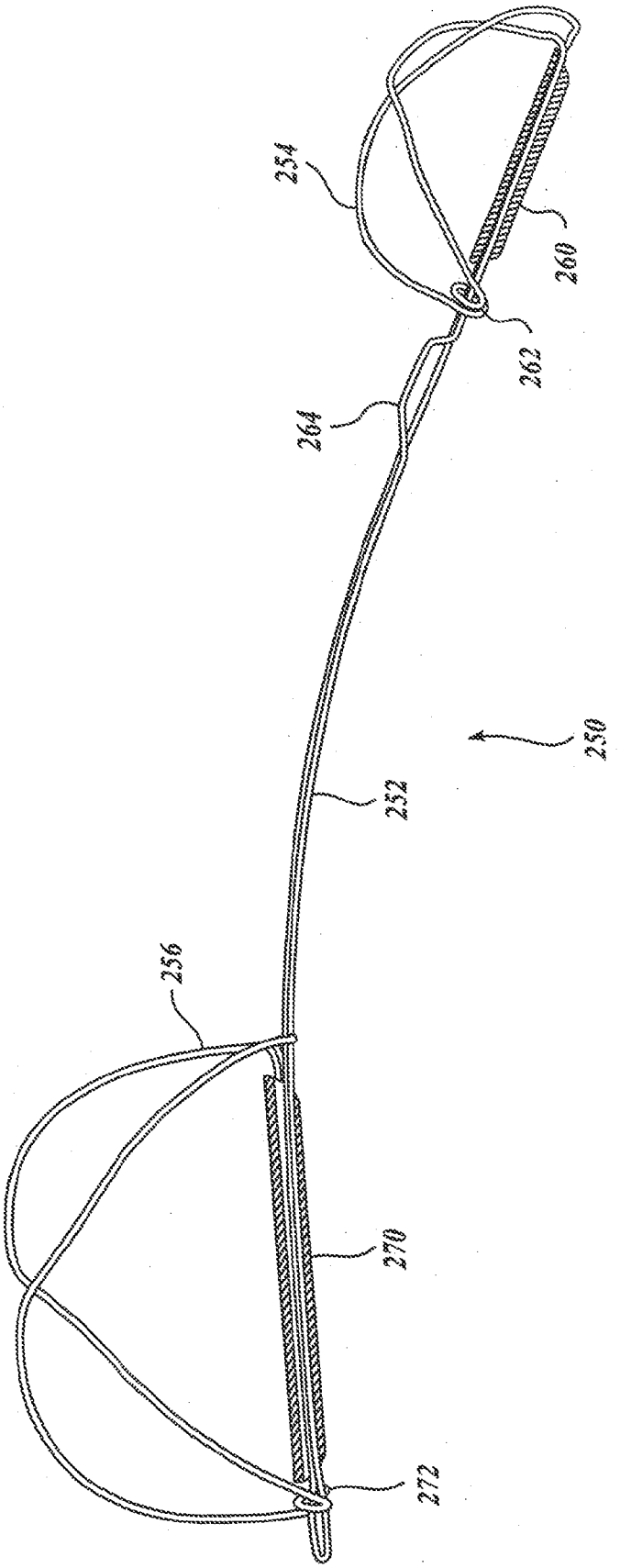


Fig. 9.

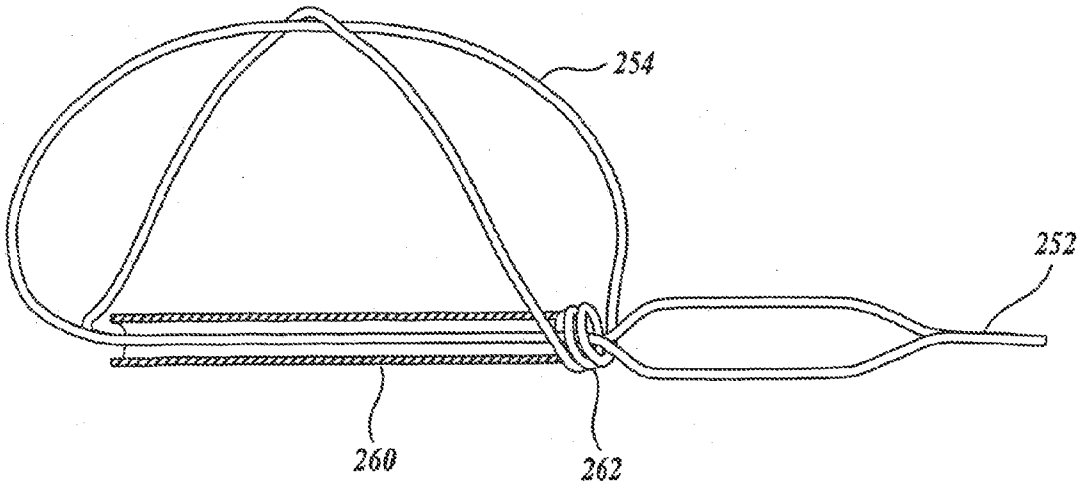


*Fig.10.*

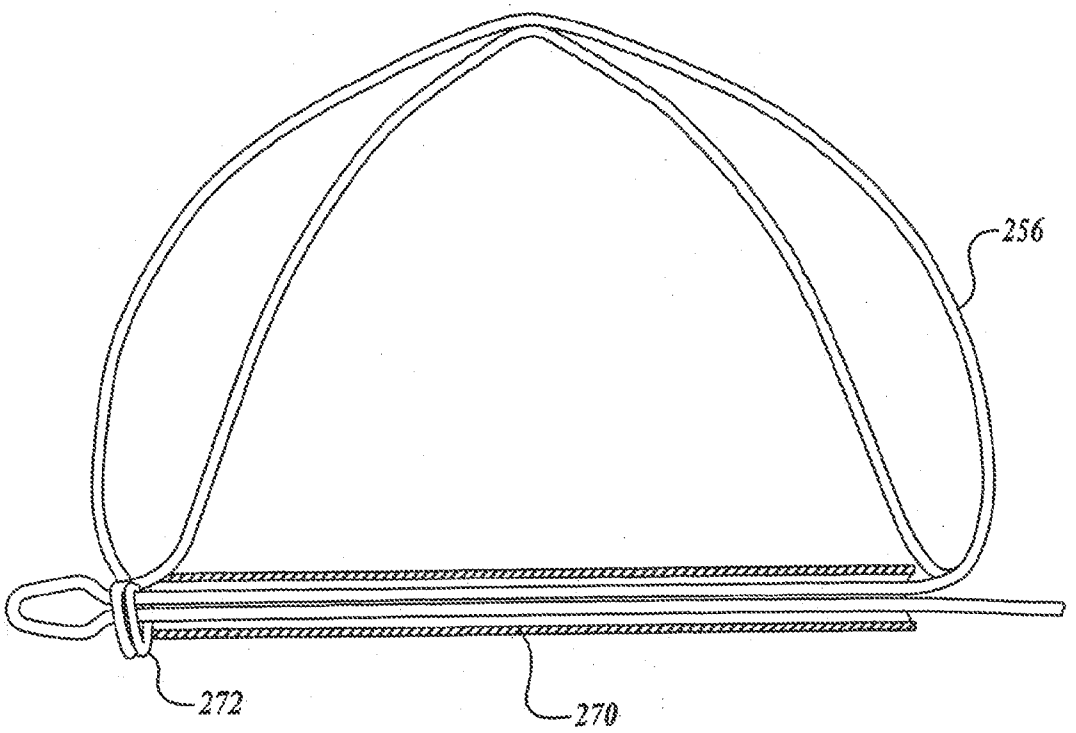


*Fig.11.*

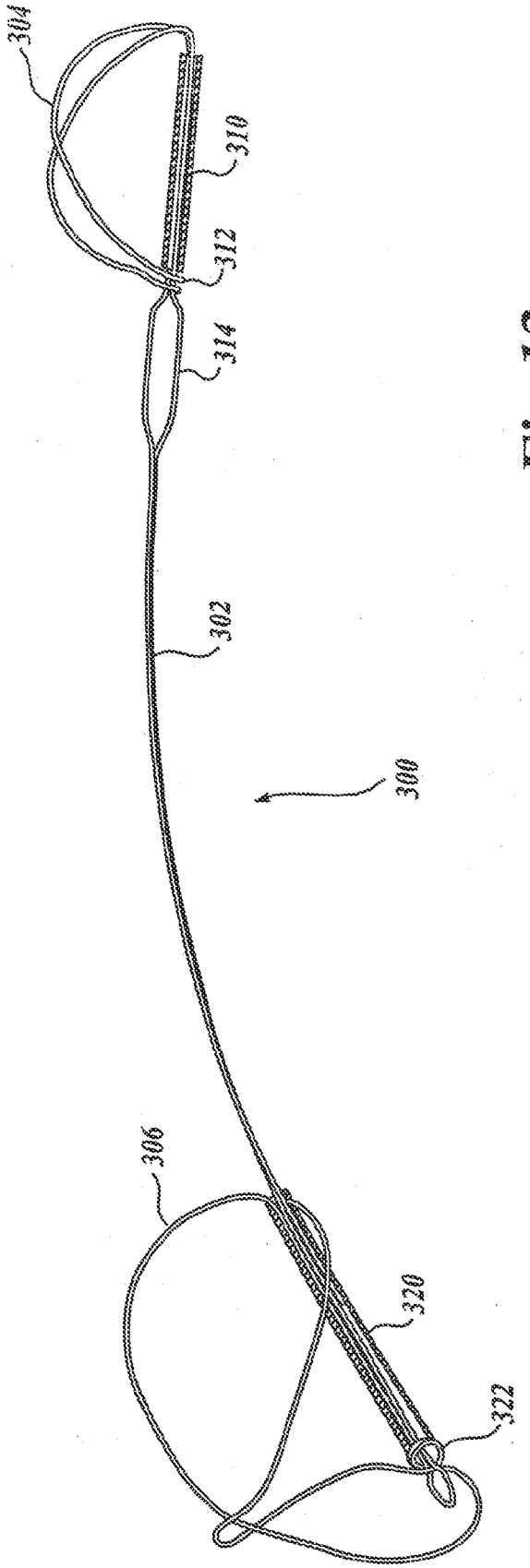


Fig. 12.

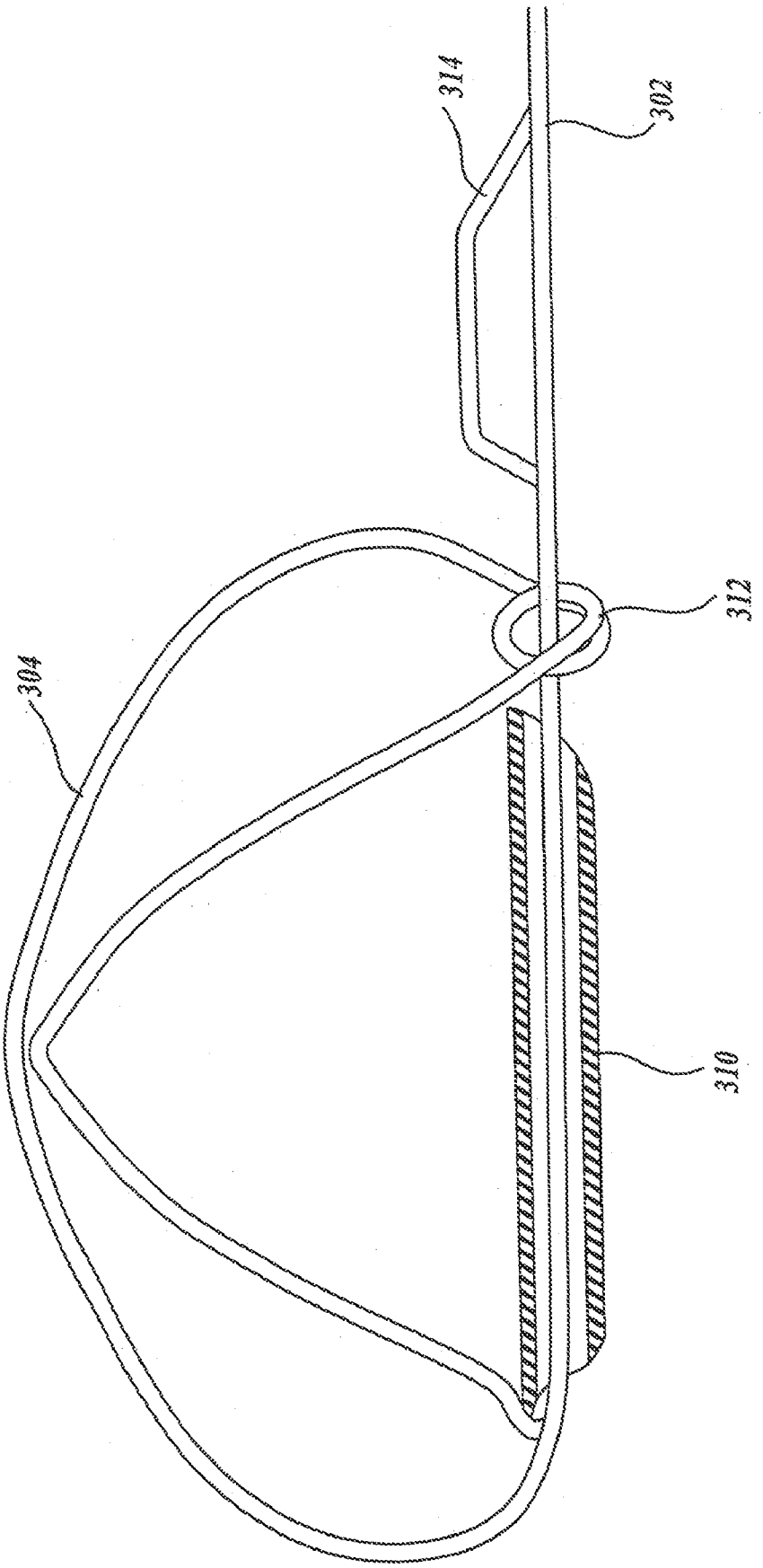


Fig. 13.

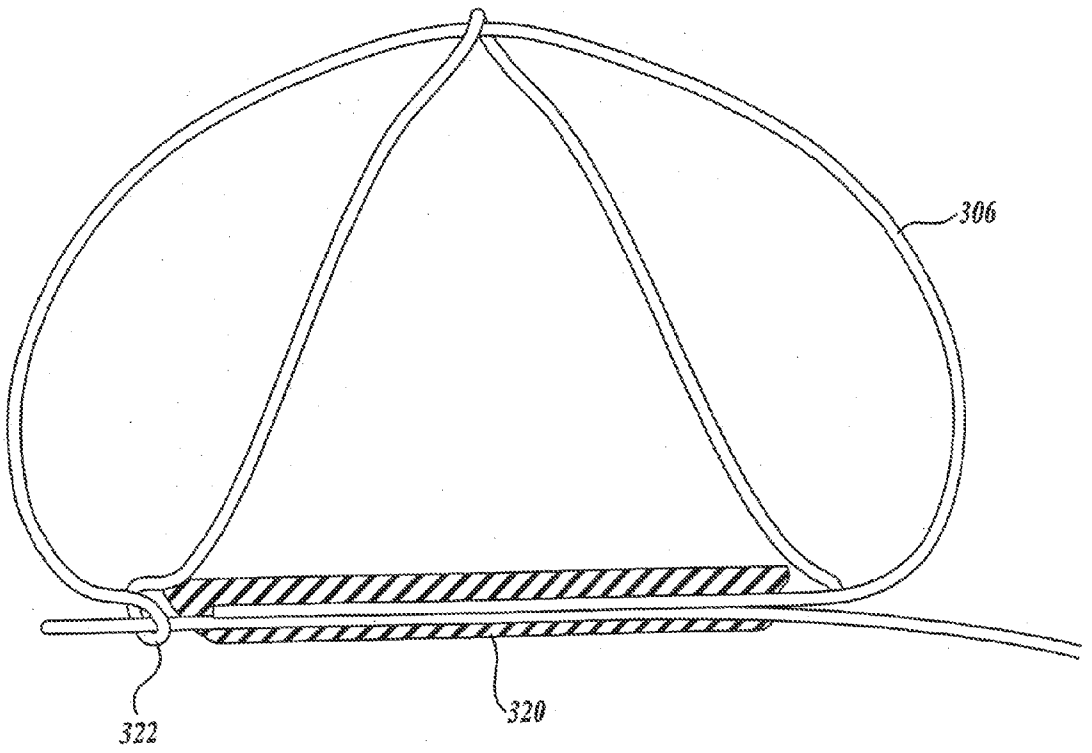


*Fig.14.*

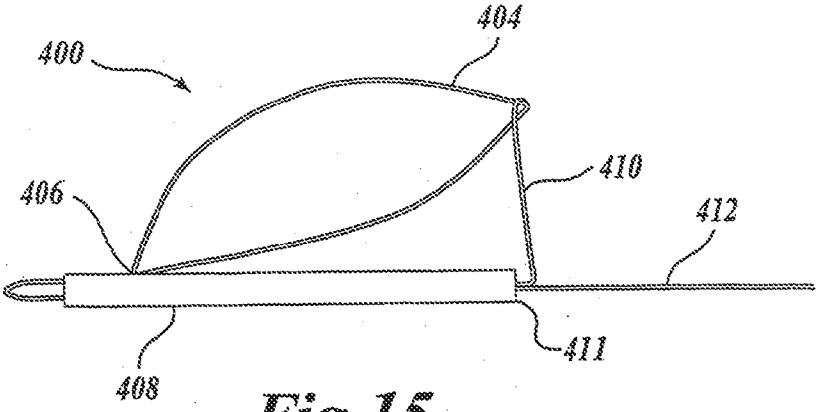


Fig.15.

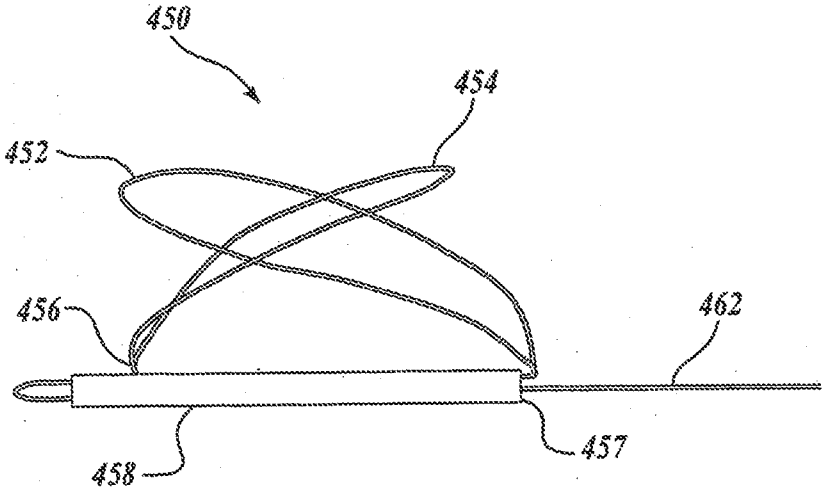


Fig.16.

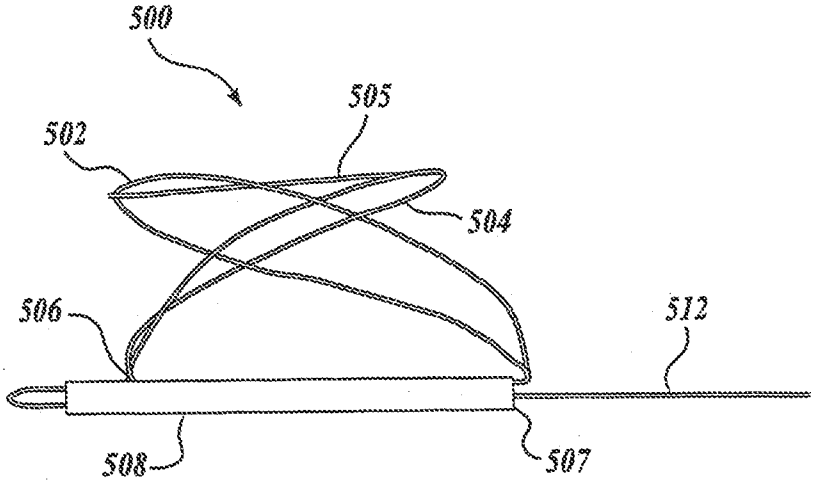


Fig.17.

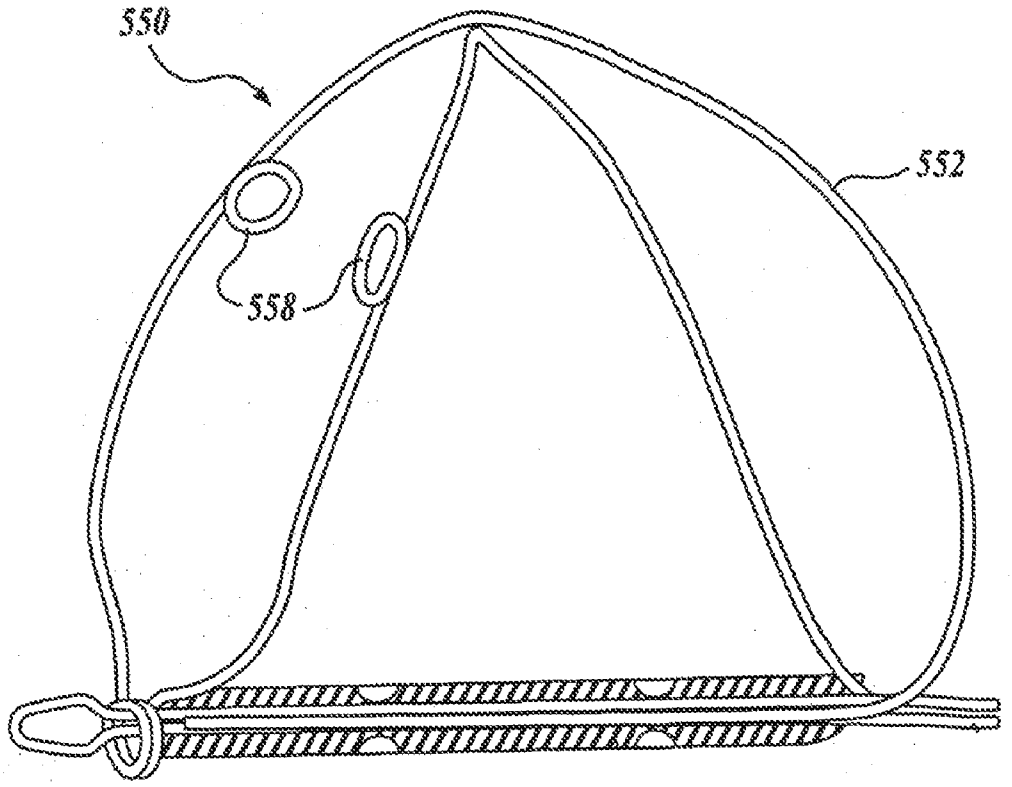


*Fig.18.*

# DEVICE AND METHOD FOR MODIFYING THE SHAPE OF A BODY ORGAN

## CROSS-REFERENCE TO RELATED APPLICATIONS

**[0001]** The present application is a divisional of U.S. application Ser. No. 12/719,758, filed Mar. 8, 2010, which is a continuation of U.S. application Ser. No. 11/467,105, filed Aug. 24, 2006, now U.S. Pat. No. 7,674,287; which is a continuation of U.S. application Ser. No. 10/429,171 filed May 2, 2003, now U.S. Pat. No. 7,179,282, the disclosures of which are incorporated by reference in their entirety as if fully set forth herein.

## FIELD OF THE INVENTION

**[0002]** The present invention relates to medical devices in general, and in particular to devices for supporting internal body organs.

## BACKGROUND OF THE INVENTION

**[0003]** The mitral valve is a portion of the heart that is located between the chambers of the left atrium and the left ventricle. When the left ventricle contracts to pump blood throughout the body, the mitral valve closes to prevent the blood being pumped back into the left atrium. In some patients, whether due to genetic malformation, disease or injury, the mitral valve fails to close properly causing a condition known as regurgitation, whereby blood is pumped into the atrium upon each contraction of the heart muscle. Regurgitation is a serious, often rapidly deteriorating, condition that reduces circulatory efficiency and must be corrected.

**[0004]** Two of the more common techniques for restoring the function of a damaged mitral valve are to surgically replace the valve with a mechanical valve or to suture a flexible ring around the valve to support it. Each of these procedures is highly invasive because access to the heart is obtained through an opening in the patient's chest. Patients with mitral valve regurgitation are often relatively frail thereby increasing the risks associated with such an operation.

**[0005]** One less invasive approach for aiding the closure of the mitral valve involves the placement of a support structure in the cardiac sinus and vessel that passes adjacent the mitral valve. The support structure is designed to push the vessel and surrounding tissue against the valve to aid its closure. This technique has the advantage over other methods of mitral valve repair because it can be performed percutaneously without opening the chest wall. While this technique appears promising, some proposed supports appear to limit the amount of blood that can flow through the coronary sinus and may contribute to the formation of thrombosis in the vessel. Therefore, there is a need for a tissue support structure that does not inhibit the flow of blood in the vessel in which it is placed and reduces the likelihood of thrombosis formation. Furthermore, the device should be flexible and securely anchored such that it moves with the body and can adapt to changes in the shape of the vessel over time.

## SUMMARY OF THE INVENTION

**[0006]** The present invention is an intravascular support that is designed to change the shape of a body organ that is adjacent to a vessel in which the support is placed. In one embodiment of the invention, the support is designed to aid the closure of a mitral valve. The support is placed in a coronary sinus and vessel that are located adjacent the mitral valve and urges the vessel wall against the valve to aid its closure.

**[0007]** The intravascular support of the present invention includes a proximal and distal anchor and a support wire or reshaper disposed therebetween. The proximal and distal anchors circumferentially engage a vessel in which the support is placed. A support wire is urged against the vessel by the proximal and distal anchors to support the tissue adjacent the vessel.

**[0008]** In one embodiment of the invention, the proximal and distal supports are made from a wire hoop that presents a low metal coverage area to blood flowing within the vessel. The wire hoops may allow tissue to grow over the anchors to reduce the chance of thrombosis formation. The wire hoops have a figure eight configuration and can expand to maintain contact with the vessel walls if no vessel expands or changes shape.

**[0009]** In another embodiment of the invention, the proximal and distal anchors of the intravascular support are rotationally offset from each other. Locks on the support wire allow a physician to ensure that the anchors have been successfully deployed and prevent the support wire from collapsing within a vessel.

## INCORPORATION BY REFERENCE

**[0010]** All publications and patent applications mentioned in this specification are herein incorporated by reference to the same extent as if each individual publication or patent application was specifically and individually indicated to be incorporated by reference.

## BRIEF DESCRIPTION OF THE DRAWINGS

**[0011]** The foregoing aspects and many of the attendant advantages of this invention will become more readily appreciated as the same become better understood by reference to the following detailed description, when taken in conjunction with the accompanying drawings, wherein:

**[0012]** FIG. **1** illustrates an intravascular support for changing the shape of an internal body organ in accordance with one embodiment of the present invention;

**[0013]** FIG. **2** illustrates one method of deploying an intravascular support in accordance with the present invention;

**[0014]** FIG. **3** illustrates one embodiment of the intravascular support in accordance with the present invention;

**[0015]** FIG. **4** illustrates a distal anchor of the embodiment shown in FIG. **3**;

**[0016]** FIG. **5** illustrates a proximal anchor of the embodiment shown in FIG. **3**;

**[0017]** FIGS. **6**A-**6**C are cross-sectional views of crimp tubes for use with one embodiment of the present invention;

**[0018]** FIG. **7** illustrates a proximal lock at the proximal end of the intravascular support as shown in FIG. **3**;

**[0019]** FIG. **8** illustrates how the embodiment of the intravascular support shown in FIG. **3** is deployed from a catheter;

**[0020]** FIG. **9** illustrates an intravascular support in accordance with another embodiment of the present invention;

**[0021]** FIG. **10** illustrates a distal anchor of the intravascular support shown in FIG. **9**;

**[0022]** FIG. **11** illustrates a proximal anchor of the intravascular support shown in FIG. **9**;

**[0023]** FIG. **12** illustrates yet another embodiment of an intravascular support in accordance with the present invention;

**[0024]** FIG. **13** illustrates a distal anchor of the intravascular support shown in FIG. **12**;

**[0025]** FIG. **14** illustrates a proximal anchor of the intravascular support shown in FIG. **12**;

**[0026]** FIG. **15** illustrates an anchor and strut according to another embodiment of the invention;

**[0027]** FIG. **16** illustrates a double loop anchor according to another embodiment of the invention;

**[0028]** FIG. **17** illustrates a double loop anchor with a cross strut according to another embodiment of the invention; and

**[0029]** FIG. **18** illustrates an anchor with torsional springs according to another embodiment of the invention.

## DETAILED DESCRIPTION OF THE INVENTION

**[0030]** As indicated above, the present invention is a medical device that supports or changes the shape of tissue that is adjacent a vessel in which the device is placed. The present invention can be used in any location in the body where the tissue needing support is located near a vessel in which the device can be deployed. The present invention is particularly useful in supporting a mitral valve in an area adjacent a coronary sinus and vessel. Therefore, although the embodiments of the invention described are designed to support a mitral valve, those skilled in the art will appreciate that the invention is not limited to use in supporting a mitral valve.

**[0031]** FIG. **1** illustrates a mitral valve **20** having a number of flaps **22**, **24**, and **26** that should overlap and close when the ventricle of the heart contracts. As indicated above, some hearts may have a mitral valve that fails to close properly thereby creating one or more gaps **28** that allow blood to be pumped back into the left atrium each time the heart contracts. To add support to the mitral valve such that the valve completely closes, an intravascular support **50** is placed in a coronary sinus and vessel **60** that passes adjacent one side of the mitral valve **20**. The intravascular support **50** has a proximal anchor **52**, a distal anchor **54**, and a support wire **56** or reshaper extending between the proximal and distal anchors. With the anchors **52** and **54** in place, the support wire **56** exerts a force through the coronary sinus wall on the posterolateral mitral valve **20** thereby closing the one or more gaps **28** formed between the valve flaps. With the intravascular support **50** in place, the function of the mitral valve is improved.

**[0032]** As will be explained in further detail below, each of the proximal and distal anchors **52**, **54** preferably circumferentially engages the wall of the vessel **60** in which it is placed. The support wire **56** is secured to a peripheral edge of the proximal and distal anchors such that the support wire is urged by the anchors against the vessel wall. Therefore, the support wire **56** and anchors **52**, **54** present a minimal obstruction to blood flowing within the vessel.

**[0033]** FIG. **2** shows one possible method of delivering the intravascular support of the present invention to a desired location in a patient's body. An incision **80** is made in the patient's skin to access a blood vessel. A guide catheter **82** is advanced through the patient's vasculature until its distal end is positioned adjacent the desired location of the intravascular support. After positioning the guide catheter **82**, a delivery catheter and advancing mechanism **84** are inserted through the guide catheter **82** to deploy the intravascular support at the desired location in the patient's body. Further detail regarding one suitable advancing mechanism **84** is described in commonly assigned U.S. patent application Ser. No. 10/313,914, filed Dec. 5, 2002, the disclosure of which is hereby incorporated by reference.

**[0034]** FIG. **3** illustrates one embodiment of an intravascular support in accordance with the present invention. The intravascular support **100** includes a support wire **102** having a proximal end **104** and a distal end **106**. The support wire **102** is made of a biocompatible material such as stainless steel or a shape memory material such as nitinol wire.

**[0035]** In one embodiment of the invention, the support wire **102** comprises a double length of nitinol wire that has both ends positioned within a distal crimp tube **108**. To form the support wire **102**, the wire extends distally from the crimp tube **108** where it is bent to form a distal stop loop (see **121** in FIG. **4**) having a diameter that is larger than the lumens within the distal crimp tube **108**. After forming the distal stop loop, the wire returns proximally through the crimp tube **108** towards the proximal end of the support **100**. Proximal to the proximal end of the crimp tube **108**, is a distal lock **110** that is formed by the support wire bending away from the longitudinal axis of the support **102** and then being bent parallel to the longitudinal axis of the support before being bent again towards the longitudinal axis of the support. Therefore, the bends in the support wire form a half **110***a* of the distal lock that is used to secure the distal anchor in the manner described below. From the distal lock **110**, the wire continues proximally through a proximal crimp tube **112**. On exiting the proximal end of the proximal crimp tube **112**, the wire is bent to form an arrowhead-shaped proximal lock **114**. The wire of the support **102** then returns distally through the proximal crimp tube **112** to a position just proximal to the proximal end of the distal crimp tube **108** wherein the wire is bent to form a second half **110***b* of the distal lock **110**.

**[0036]** Support wire **102** has a length that is selected based on its intended destination within a patient's vessel. For use in supporting a mitral valve, the support wire is preferably between one and six inches long and has a curved bend between its proximal end **104** and distal end **106** with a radius of curvature between 1 and 3 inches and most preferably with a radius of curvature of 1.8 inches. In addition, the wire used to form the support wire **102** is flexible enough to move with each heartbeat (thereby changing the force applied to the mitral valve annulus during the heartbeat) and stiff enough to support the mitral valve. In one embodiment, the wire used to form the support wire **102** is made of nitinol having a modulus of elasticity of 5-20×106 psi and a diameter of between 0.0110" and 0.0150" and most preferably 0.0140". Other shape memory materials may be used for support wire as well.

**[0037]** At the distal end of the support wire **102** is a distal anchor **120** that is formed of a flexible wire such as nitinol or some other shape memory material. As is best shown in FIGS. **3** and **4**, the wire forming the distal anchor has one end positioned within the distal crimp tube **108**. After exiting the distal end of the crimp tube **108**, the wire forms a figure eight configuration whereby it bends upward and radially outward from the longitudinal axis of the crimp tube **108**. The wire then bends back proximally and crosses the longitudinal axis of the crimp tube **108** to form one leg of the figure eight. The wire is then bent to form a double loop eyelet or loop **122** around the longitudinal axis of the support wire **102** before extending radially outwards and distally back over the longitudinal axis of the crimp tube **108** to form the other leg of the

figure eight. Finally, the wire is bent proximally into the distal end of the crimp tube **108** to complete the distal anchor **120**.

**[0038]** The distal anchor is expanded by sliding the double eyelet **122** of the distal anchor from a position that is proximal to the distal lock **110** on the support wire to a position that is distal to the distal lock **110**. The bent-out portions **110***a* and **110***b* of distal lock **110** are spaced wider than the width of double eyelet **122** and provide camming surfaces for the locking action. Distal movement of eyelet **122** pushes these camming surfaces inward to permit eyelet **122** to pass distally of the lock **110**, then return to their original spacing to keep eyelet **122** in the locked position.

**[0039]** The dimensions of the distal anchor are selected so that the diameter of the distal anchor in a plane perpendicular to the axis of the lumen in which the anchor is deployed is preferably between 100% and 300%, most preferably between 130% and 200%, of the diameter of the lumen prior to deployment. When treating mitral valve regurgitation by placement of the device in the coronary sinus, the diameter of the coronary sinus may expand over time after deployment. Oversizing the anchor combined with the inherent deformability and recoverability properties of the anchor material (particularly nitinol or some other shape memory material) enables the anchor to continue to expand from its initial deployment size as the lumen distends and expands over time.

**[0040]** Upon expansion, the distal anchor circumferentially engages the vessel wall with a radially outwardly directed force that is distributed unequally around the circumference of the anchor by distending the vessel wall in variable amounts along the axial length of the anchor. The unequal distribution of force helps the anchor contact the lumen wall securely by creating bumps and ridges that are not parallel to the central axis of the lumen. In its expanded configuration, the distal anchor's diameter is at least 150%-500% and most preferably 150%-300% of the anchor's diameter in the unexpanded configuration. The open cross-sectional area of the lumen through the anchor is at least 50%, and most preferably 80%-100% of the lumen cross-sectional area prior to redeployment of the anchor.

**[0041]** In addition, the metal coverage of the anchor, as defined by the percentage of the lumen surface area through which the device extends that is exposed to a metal surface, is between 5% and 30% and most preferably 10%. The wire used to form the distal anchor **120** is preferably nitinol having a diameter of between 0.0110" and 0.0150" and most preferably 0.0140 inches. Other shape memory materials may be used as well.

**[0042]** During insertion, a physician can tactilely feel when the eyelet **122** has been slid over the distal lock **110** in order to determine when the distal anchor has been set within a vessel lumen. In addition, if the anchor is misplaced, it can be collapsed by pulling the eyelet **122** proximally over the distal lock **110** and repositioning the anchor in the unexpanded configuration. The force required to capture the distal anchor is preferably less than 20 lbs. and more preferably less than 10 lbs.

**[0043]** FIG. **4** also illustrates how the crimp tube **108** is held in place between the distal lock **110** on the proximal side and the stop loop **121** at the distal end of the support wire **102**. The wires of the distal anchor **120** exit the distal end of the crimp tube **108** at an angle of approximately 45 degrees before looping back over the length of the distal crimp tube **108**. Therefore, the distal end of the anchor is relatively atraumatic to avoid damage to a vessel during placement.

**[0044]** At the proximal end of the intravascular support is a proximal anchor **140** that is preferably formed of a biocompatible, elastic wire such as stainless steel or a shape memory material such as nitinol. As is best shown in FIGS. **3** and **5**, the proximal anchor **140** in one embodiment is made of a single length of wire having a first end positioned within a proximal crimp tube **112**. The wire extends distally from the crimp tube **112** and bends radially outward and away from the longitudinal axis of the crimp tube **112** before being bent proximally and crossing the longitudinal axis of the crimp tube **112** in order to form a first leg of a figure eight configuration. The wire then is bent to form a double eyelet or loop **142** around the longitudinal axis of the support wire **102** wherein the eyelet **142** has a diameter that allows it to be forced over the proximal lock **114**. After forming the eyelet **142**, the wire extends outwardly and away from the longitudinal axis of the crimp tube **112** before being bent distally over and across the longitudinal axis of the crimp tube **112** to form the second leg of a figure eight. Finally, the wire is bent proximally and extends into the distal end of the crimp tube **112**.

**[0045]** Like the distal anchor, the proximal anchor is expanded and locked by sliding the double eyelet **142** of the proximal anchor from a position that is proximal to the proximal lock **114** on the support wire to a position that is distal to the proximal lock **114**. As can be seen in FIG. **7**, the proximal lock **114** has an "arrowhead" shape whereby the proximal end of the lock is bent away from the longitudinal axis of the support wire at an angle that is less steep than the distal end of the proximal lock. The less steep section makes it easier to advance the eyelet **142** over the lock in the distal direction than to retrieve the eyelet **142** over the proximal lock **114** in the proximal direction. Distal movement of eyelet **142** cams the less steep proximal surfaces inward to permit eyelet **142** to pass distally of the lock **114**, then return to their original spacing to keep eyelet **142** in the locked position.

**[0046]** As can be seen by comparing the proximal anchor **140** with the distal anchor **120** in FIG. **3**, the proximal anchor has a larger radius of curvature because it is designed to fit within a larger diameter portion of the coronary sinus. The dimensions of the proximal anchor are selected so that the diameter of the proximal anchor in a plane perpendicular to the axis of the lumen in which the anchor is deployed is preferably between 100% and 300%, most preferably between 130% and 200%, of the diameter of the lumen prior to deployment. As with the distal anchor, oversizing the proximal anchor combined with the inherent deformability and recoverability properties of the anchor material (particularly nitinol or some other shape memory material) enables the anchor to continue to expand from its initial deployment size as the lumen distends and expands over time.

**[0047]** Upon expansion, the proximal anchor circumferentially engages the vessel wall with a radially outwardly directed a force that is distributed unequally around the circumference of the anchor by distending the vessel wall in variable amounts along the axial length of the anchor. As with the distal anchor, the unequal distribution of force helps the proximal anchor contact the lumen wall securely by creating bumps and ridges that are not parallel to the central axis of the lumen. In its expanded configuration, the proximal anchor's diameter is at least 200%-500% and most preferably 200%-300% of the anchor's diameter in the unexpanded configuration. The open cross-sectional area of the lumen through the

anchor is at least 50% and most preferably 80%-100% of the lumen cross sectional area prior to redeployment of the anchor.

**[0048]** FIG. **3** illustrates an embodiment external to a patient's body. That is, the anchors are shown in expanded configurations and in the absence of bodily forces acting on the anchors.

**[0049]** In one embodiment of the invention, the proximal and distal anchors are oriented such that the planes of the anchors are offset with respect to each other by an angle of approximately 30 degrees. The offset helps the intravascular support **100** seat itself in the coronary sinus and vessel surrounding the mitral valve in certain mammals. However, it will be appreciated that if the support is designed for other uses, the proximal and distal anchors may be offset by more or less depending upon the anatomy of the intended destination.

**[0050]** FIGS. **6**A-**6**C illustrate cross-sectional views of the crimp tubes in which the wires that form the support wire **102** and proximal and distal anchors **120**, **140** are threaded. In one embodiment, the crimp tubes comprise a biocompatible material such as titanium having a number of holes extending longitudinally through the tube through which the wires are threaded. In FIG. **6**A, a tube **150** has four holes **152**, **154**, **156**, **158** positioned in approximately a square configuration within the circumference of the tube **150**. As shown in FIG. **6**B, a tube **160** includes four holes **162**, **164**, **166**, **168** therein that are positioned in a diamond configuration. FIG. **6**C shows another tube **170** having four holes **172**, **174**, **176**, **178**. Here the holes **172**, **174** lie in a first plane and the second pair of holes **176**, **178** lie in a second plane that is offset from the plane of the holes **172**, **174**. By changing the orientation of the holes **176**, **178** with respect to the holes **172**, **174**, the relative plane of wires passing through the holes can be adjusted. Thus in the example shown in FIG. **3**, the proximal anchor may be formed with a crimp tube such as that shown in FIG. **6**A or FIG. **6**B while the proximal anchor may be formed in a crimp tube such as that shown in FIG. **6**C in order to adjust the angular orientation between the proximal anchor and the distal anchor. In an alternative embodiment, the crimp tubes at the proximal and distal ends of the support wire **102** are the same and the angular offset between the proximal and distal anchor is achieved by bending the wires at the desired angle. Although the crimp tubes shown use one hole for each wire passing through the crimp tube, it will be appreciated that other configurations may be provided such as slots or other passages for the wires to pass through.

**[0051]** In another embodiment, the distal and proximal anchors are attached to the support wire by a wire, such as nitinol wire or other shape memory material. The attaching wire may be spiral wrapped around the base of each anchor and around the support wire. In another embodiment, each anchor may be attached to the support wire by wrapping the anchor wire around the support wire. In yet another embodiment, the two anchors and the support wire may be made from a single wire, such as nitinol wire or other shape memory material.

**[0052]** FIG. **8** illustrates one method for delivering an intravascular support **100** in accordance with the present invention to a desired location in the body. As indicated above, intravascular support **100** is preferably loaded into and routed to a desired location within a catheter **200** with the proximal and distal anchors in a collapsed or deformed condition. That is, the eyelet **122** of the distal anchor **120** is positioned proximally of the distal lock **110** and the eyelet **142** of the proximal anchor **140** is positioned proximal to the proximal lock **114**. The physician ejects the distal end of the intravascular support from the catheter **200** into the lumen by advancing the intravascular support or retracting the catheter or a combination thereof. A pusher (not shown) provides distal movement of the intravascular support with respect to catheter **200**, and a tether **201** provides proximal movement of the intravascular support with respect to catheter **200**. Because of the inherent recoverability of the material from which it is formed, the distal anchor begins to expand as soon as it is outside the catheter. Once the intravascular support is properly positioned, the eyelet **122** of the distal anchor is pushed distally over the distal lock **110** so that the distal anchor **120** further expands and locks in place to securely engage the lumen wall and remains in the expanded condition. Next, the proximal end of the support wire **102** is tensioned by applying a proximally-directed force on the support wire and distal anchor to apply sufficient pressure on the tissue adjacent the support wire to modify the shape of that tissue. In the case of the mitral valve, fluoroscopy, ultrasound or other imaging technology may be used to see when the support wire supplies sufficient pressure on the mitral valve to aid in its complete closure with each ventricular contraction without otherwise adversely affecting the patient. A preferred method of assessing efficacy and safety during a mitral valve procedure is disclosed in copending U.S. patent application Ser. No. 10/366,585, filed Feb. 12, 2003, and titled "Method of Implanting a Mitral Valve Therapy Device," the disclosure of which is incorporated herein by reference. Once the proper pressure of the support wire has been determined, the proximal anchor is deployed from the catheter and allowed to begin its expansion. The eyelet **142** of the proximal anchor **140** is advanced distally over the proximal lock **114** to expand and lock the proximal anchor, thereby securely engaging the lumen wall and maintaining the pressure of the support wire against the lumen wall. Finally, the mechanism for securing the proximal end of the intravascular support can be released. In one embodiment, the securement is made with a braided loop **202** at the end of tether **201** and a hitch pin **204**. The hitch pin **204** is withdrawn thereby releasing the loop **202** so it can be pulled through the proximal lock **114** at the proximal end of the intravascular support **100**.

**[0053]** In many contexts, it is important for the device to occupy as little of the lumen as possible. For example, when using the device and method of this invention to treat mitral valve regurgitation, the device should be as open as possible to blood flow in the coronary sinus (and to the introduction of other medical devices, such as pacing leads) while still providing the support necessary to reshape the mitral valve annulus through the coronary sinus wall. The combination of the device's open design and the use of nitinol or some other shape memory material enables the invention to meet these goals. When deployed in the coronary sinus or other lumen, the device preferably occupies between about 1.5% and about 5.5% of the overall volume of the section of lumen in which it is deployed.

**[0054]** In many embodiments of the invention, the use of a shape memory material such as nitinol is particularly important. The percentage of shape memory material by volume in the device is preferably between about 30% and 100%, most preferably between about 40% and 60%.

**[0055]** In some instances, it may be necessary to move or remove an intravascular support after deployment by recapturing the device into a catheter. Prior to deployment of the

proximal anchor, the distal anchor may be recaptured into the delivery catheter by simultaneously holding the device in place with tether **201** while advancing catheter distally over distal anchor **120** so that the entire device is once again inside catheter **200**. The distally directed force of the catheter collapses distal anchor **120** into a size small enough to fit into catheter **200** again. Likewise, after deployment of both anchors but prior to releasing the securement mechanism as described above, the intravascular support may be recaptured into the delivery catheter by simultaneously holding the device in place with tether **201** while advancing catheter distally first over proximal anchor **140**, over support wire **102**, and finally over distal anchor **120**. The distally directed forced of catheter **200** collapses anchors **120** and **140** into a size small enough to fit into catheter **200** again. If the securement mechanism has been detached from the device prior to recapture, the device still may be recaptured into the delivery catheter or another catheter by grasping the proximal end of the device with a grasper or tether and by advancing the catheter distally over the device.

**[0056]** In one embodiment of the invention, proximal anchor **140** includes a recapture guidance and compression element. In the embodiment shown in FIG. **5**, the slope of the two proximal arms **143** and **144** of proximal anchor **140** is small in proximal portions **145** and **146** of the arms, then increases in more distal portions **147** and **148** of the arms. This shape guides the catheter to move distally over the anchor more easily and to help compress the anchor to a collapsed shape as the catheter advances during recapture.

**[0057]** Likewise, the two proximal arms **123** and **124** of distal anchor **120** have a shallower slope in their proximal portions **145** and **146** and an increased slope in more distal portions **147** and **148**. While recapture of the distal anchor is somewhat easier due to its smaller size compared to the proximal anchor, this recapture guidance and compression feature enhances the ease with which recapture is performed.

**[0058]** FIG. **9** illustrates an alternative embodiment of the intravascular support of the present invention. In this embodiment, an intravascular support **250** has a support wire **252** and a distal anchor **254** and a proximal anchor **256**. In the embodiment shown in FIG. **9**, the distal anchor **254** is made from the same wire used to form the support wire **252**. As best shown in FIG. **10**, the wire used to form the support wire **252** extends distally through a distal crimp tube **260** before looping radially outward and returning proximally and across the longitudinal axis of the crimp tube **260** to form one leg of a figure eight. The wire then winds around the axis of the suspension wire **252** to form an eyelet **262**. The wire then continues radially outward and distally across the longitudinal axis of the crimp tube **260** to form the second leg of a figure eight. After forming the figure eight, the wire enters the distal end of the crimp tube **260** in the proximal direction to form the other half of the support wire **252**. A distal lock **264** is formed proximal to the distal crimp tube **260** by outwardly extending bends in the wires that form the support wire **252**. The distal lock **264** prevents the double eyelet **262** from sliding proximally and collapsing the distal anchor **254** when positioned in a vessel.

**[0059]** As shown in FIG. **11**, a proximal anchor **256** is constructed in a fashion similar to the proximal anchor **140** shown in FIG. **3**. That is, the proximal anchor **256** is formed of a separate wire than the wire used to form the support wire **252** and distal anchor **254**. The wire of the proximal anchor has one end within a proximal crimp tube **270**. The wire extends distally out of the end of the crimp tube and bends radially outward before returning back and across the longitudinal axis of the crimp tube **270**. At the proximal end of the crimp tube **270**, the wire of the proximal anchor forms a double eyelet **272** around the longitudinal axis of the support wire **252**. The wire then continues radially outward and distally over the longitudinal axis of the crimp tube **270** to form the second leg of the figure eight whereupon it is bent proximally into the distal end of the crimp tube **270**.

**[0060]** FIG. **12** shows yet another embodiment of an intravascular support in accordance with the present invention. Here, an intravascular support **300** comprises a support wire **302**, a distal anchor **304** and a proximal anchor **306**. As in the embodiment shown in FIG. **9**, the distal anchor **304** and the support wire **302** are formed of the same wire. To form the distal anchor, the wire extends distally through a distal crimp tube **310** and exits out the distal end before extending radially outward and bending back and across the longitudinal axis of the crimp tube **310** to form one leg of a figure eight. The loop then forms an eyelet **312** around the longitudinal axis of the support wire **302** before bending radially outward and distally across the longitudinal axis of the crimp tube **310** to form a second leg of the figure eight. The wire then enters the distal end of the crimp tube **310** in the proximal direction. The support wire **302** may have one or two outwardly extending sections that form a distal stop **314** to maintain the position of the eyelet **312** once the distal anchor is set in the expanded configuration.

**[0061]** The proximal anchor **306** is formed from a separate wire as shown in FIG. **14**. The wire has one end positioned within the proximal crimp tube **320** that extends distally outward and radially away from the longitudinal axis of the crimp tube **320** before being bent proximally and across the longitudinal axis of the crimp tube **320** to form one leg of the figure eight. The wire then winds around the longitudinal axis of the support wire to form an eyelet **322** before being bent distally and across the longitudinal axis of the crimp tube **320** to enter the distal end of the crimp tube **320** in the proximal direction. As will be appreciated, the proximal crimp tube **320** of the embodiment shown in FIG. **12** holds four wires wherein the distal crimp tube **310** need only hold two wires.

**[0062]** FIGS. **15-18** show other embodiments of the invention. In the embodiment shown in FIG. **15**, the intravascular support has an anchor **400** formed as a loop **404** emerging from a window **406** in a crimp tube **408**. Extending from one end **411** of crimp tube **408** is a support strut **410** which connects with loop **404**. Also extending from the crimp tube **408** is a support wire **412**. Loop **404** and support **410** may be formed from nitinol, stainless steel, or any other appropriate material. The intravascular support includes another anchor. The intravascular support of this embodiment may be delivered and deployed in the manner discussed above with respect to the embodiment described above.

**[0063]** FIG. **16** shows another embodiment of an anchor **450** for an intravascular support. Anchor **450** is formed from two loops **452** and **454** emerging from a window **456** and an end **457** of a crimp tube **458**. A support wire **462** also extends from the crimp tube. Loops **452** and **454** may be formed from nitinol, stainless steel, or any other appropriate material. The intravascular support includes another anchor. The intravascular support of this embodiment may be delivered and deployed in the manner discussed above with respect to the embodiment described above.

**[0064]** FIG. **17** shows yet another embodiment of an anchor **500** for an intravascular support according to this invention. Anchor **500** is formed from two loops **502** and **504** emerging from a window **506** and an end **507** of a crimp tube **508**. A cross strut **505** connects the loops. A support wire **512** also extends from the crimp tube. Loops **502** and **504** and strut **505** may be formed from nitinol, stainless steel, or any other appropriate material. The intravascular support includes another anchor. The intravascular support of this embodiment may be delivered and deployed in the manner discussed above with respect to the embodiment described above.

**[0065]** FIG. **18** is a modification of the embodiment shown in FIGS. **3-7**. In this embodiment, torsional springs **558** of proximal anchor **550** have been formed as single loops or eyelets in the anchor's wire **552**. These springs make the anchor **550** more compliant by absorbing some of the force applied to the anchor during locking. While FIG. **18** shows a proximal anchor with two springs **558**, any number of springs could be used on either the proximal or the distal anchor.

**[0066]** While the preferred embodiment of the invention has been illustrated and described, it will be appreciated that various changes can be made therein without departing from the spirit and scope of the invention.

What is claimed is:

**1**. A method of treating mitral valve regurgitation, comprising:

providing a device comprising a distal anchor, a proximal anchor, and a connector connecting the distal and proximal anchors;

advancing the device through a patient's vasculature within a delivery device;

expanding the distal anchor from a collapsed configuration within the delivery device to an expanded configuration with an expanded diameter in a coronary vessel lumen;

expanding the proximal anchor from a collapsed configuration within the delivery device to an expanded configuration with an expanded diameter at a location proximal to the distal anchor,

wherein the expanding steps comprise expanding the proximal anchor to an expanded configuration with an expanded diameter than is at least about 133% greater than the expanded diameter of the distal anchor.

**2**. The method of claim **1** wherein the advancing step comprises advancing the distal anchor and the proximal anchor within the delivery device in collapsed configurations which have substantially the same diameters.

**3**. The method of claim **1** wherein the expanding steps comprise expanding the proximal anchor to an expanded configuration with an expanded diameter than is at least about 200% greater than the expanded diameter of the distal anchor.

**4**. The method of claim **1** wherein the expanding steps comprise expanding the proximal anchor to an expanded configuration with an expanded diameter than is at least about 333% greater than the expanded diameter of the distal anchor.

**5**. The method of claim **1** wherein expanding the distal anchor comprises moving the delivery device proximally relative to the distal anchor to allow the distal anchor to self-expand.

**6**. The method of claim **1** wherein expanding the proximal anchor comprises moving the delivery device proximally relative to the proximal anchor to allow the proximal anchor to self-expand.

**7**. The method of claim **1** further comprising locking the distal anchor in the expanded configuration.

**8**. The method of claim **1** further comprising locking the proximal anchor in the expanded configuration.

**9**. The method of claim **1** wherein the distal expansion step comprises anchoring the distal anchor in the coronary vessel lumen, and wherein the proximal expansion step comprises anchoring the proximal anchor at a location proximal relative to the distal anchor.

**10**. The method of claim **9** further comprising pulling the proximal anchor proximally after the distal anchor is expanded and anchored in the lumen to cause the geometry of the mitral valve annulus to be modified.

**11**. The method of claim **10** wherein the proximal expansion step occurs after the proximal anchor is pulled in the proximal direction, and wherein the proximal expansion step maintains the modified geometry of the mitral valve annulus.

* * * * *