2 Sheets—Sheet 1.

J. MORGAN.

Machine for Making Bolts and Rivets.

No. 233,685. **Patented Oct. 26, 1880.**

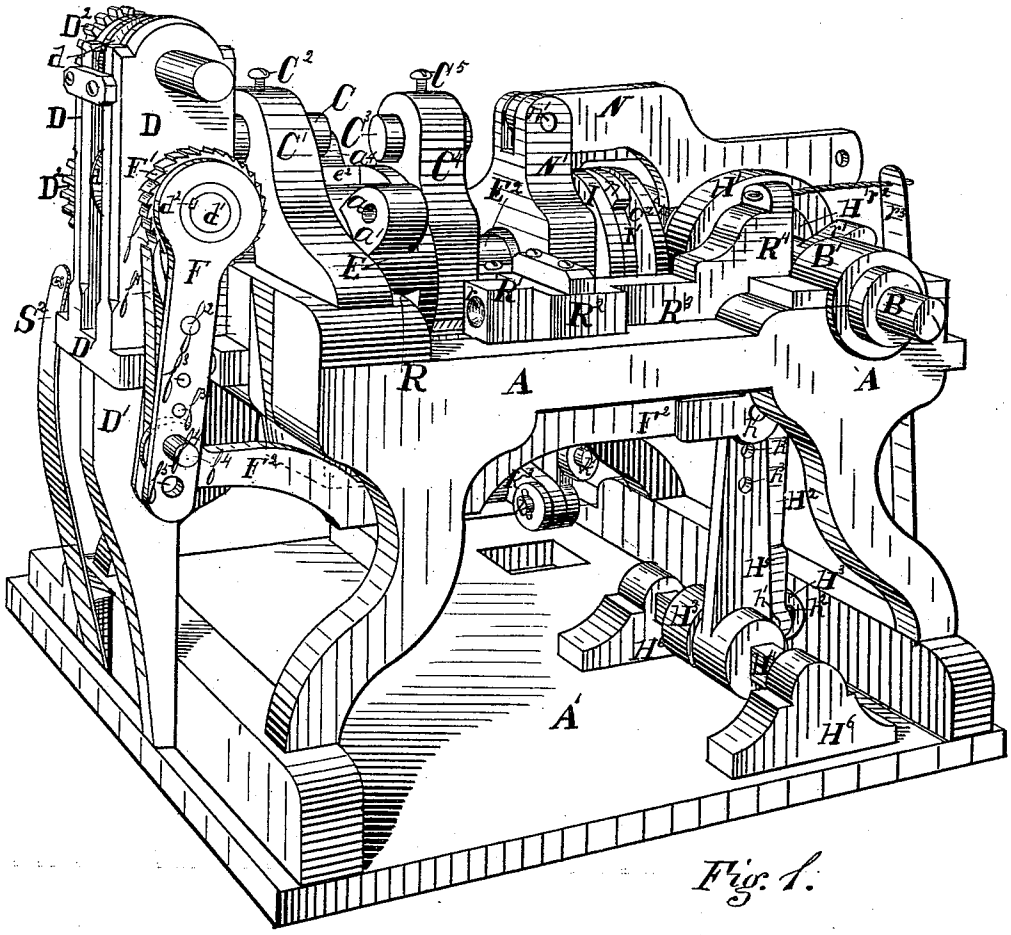

Fig. 1.

Witnesses
R. F. Whittlesey
E. L. Parker

Inventor James Morgan,
By Attorney George A. Christy

N. PETERS, PHOTO-LITHOGRAPHER, WASHINGTON, D. C.

2 Sheets—Sheet 2.

J. MORGAN.

Machine for Making Bolts and Rivets.

No. 233,685. Patented Oct. 26, 1880.

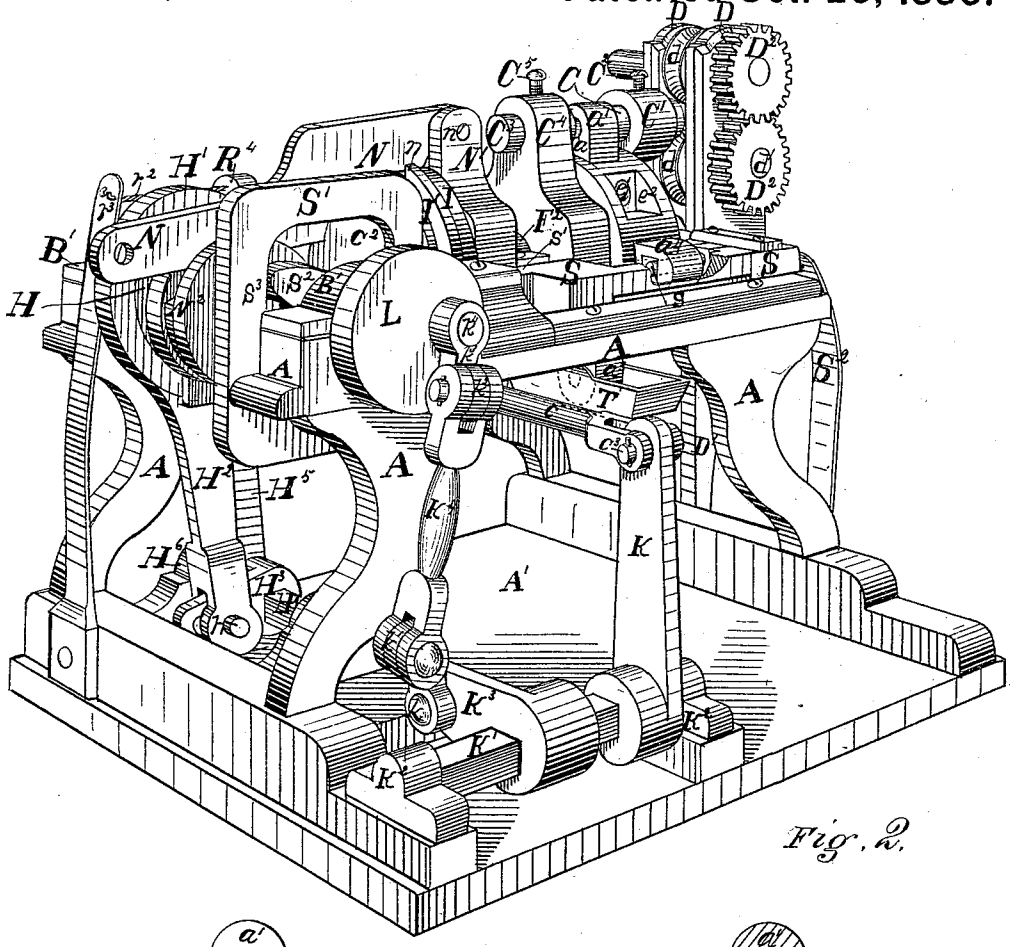

Fig. 2.

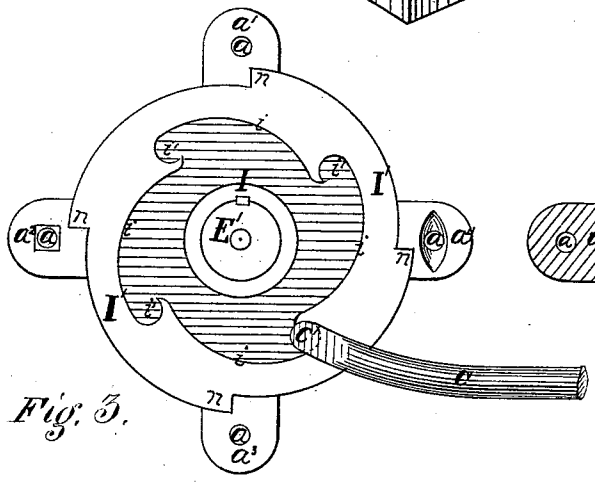

Fig. 3.

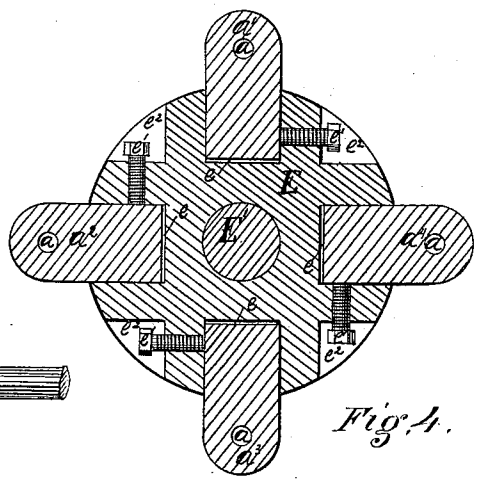

Fig. 4.

Witnesses
R. F. Whitlesey
E. L. Parker

Inventor James Morgan
By Attorney George H. Christy

N. PETERS, PHOTO-LITHOGRAPHER, WASHINGTON, D. C.

UNITED STATES PATENT OFFICE.

JAMES MORGAN, OF PITTSBURG, PENNSYLVANIA.

MACHINE FOR MAKING BOLTS AND RIVETS.

SPECIFICATION forming part of Letters Patent No. 233,685, dated October 26, 1880.

Application filed December 1, 1879.

To all whom it may concern:

Be it known that I, JAMES MORGAN, of Pittsburg, county of Allegheny, State of Pennsylvania, have invented or discovered a new and useful Improvement in Bolt and Rivet Machines; and I do hereby declare the following to be a full, clear, concise, and exact description thereof, reference being had to the accompanying drawings, making a part of this specification, in which—like letters indicating like parts—

Figure 1 is a front perspective view, showing one side of my improved bolt and rivet machine. Fig. 2 is a rear perspective view, showing the other side of the machine. Fig. 3 shows an end elevation of the dies, die-shaft, and its driving mechanism; and Fig. 4 is a vertical sectional view of the dies, die head or holder, and shaft.

My invention relates to a machine for forming bolts, rivets, and similar articles, by which I secure not only an improved product, free from fins and other like irregularities incident to the use of divided or two or more part forming or griping dies; but I also secure a greatly-increased capacity in the machine for manufacturing.

In my invention I make use of an automatic feeding device, undivided or solid forming-dies, preferably four in number, which are arranged on the periphery of a die head or holder, which has an intermittent rotary motion, a shear device for severing the blanks from the rod, a header for upsetting the blank and forming a head on the end of the same, a cooling device for loosening the blank in the die or dies, and also for keeping the dies in proper working condition, and a discharging device for forcing the finished article from the dies, such feeding and shearing devices being arranged to co-operate with the successive dies at one point of rest in their revolution, while the header, cooler, and discharger are arranged to successively operate at other and succeeding points of rest in such revolution.

I will describe the construction of these several parts or devices, with the mechanism for operating the same, substantially in the order above named.

A suitable frame, A, is erected from or secured to a bed or foundation, A′. The top of this frame may consist of a plate or of suitable cross-pieces adapted to carry the parts of the machine, as hereinafter described. At the rear end of this frame is journaled a driving-shaft, B, in boxes B′. Any suitable power may be employed to drive the shaft.

At the front of the frame, upon a projecting table or bracket, D′, are erected housings D, in which are journaled a pair of grooved feeding-rolls, *d*. These rolls may be mounted and made adjustable in the usual or any convenient way, so as to pass or feed to the machine rods of different sizes. They are geared together by pinions D^2, mounted on the ends of their respective shafts, and an intermittent rotary motion is given to them by a vibrating arm, F, which is pivoted on the ends of the sleeve or hollow axis of the ratchet-wheel F′. This ratchet is keyed to the end of shaft *d*′, as at d^2. A pawl, *f*, is pivoted, by pin f^2, between the two plates of the arm F, and the free end of the pawl is held against the periphery of the ratchet by a spring, *f*′, which is secured to a block held between the plates of arm F by pins or bolts f^3. Motion is given to vibrating arm F by a reciprocating bar, F^2, which has a pivoted or jointed connection with this arm by pin f^4, while its opposite end is connected in a similar manner, by pin-and-socket joint *h*, with a lever-arm, H^5, extending upward from a rock-shaft, H^4, which is journaled in bearings H^6. To an arm, H^3, extending horizontally from rock-shaft H^4, is coupled an arm or bar, H^2, by pin *h*′ and slot h^2. The bar H^2 is connected at its upper end with a yoke or collar, H′, which encircles an eccentric, H, on the driving-shaft. The revolution of eccentric H gives to arm H^2 a vertically-reciprocating motion, which is converted into a horizontal reciprocating motion in the bar F^2 by means of the described connections, and the vibratory motion thus given to arm F imparts, through the ratchet-and-pawl connection described, an intermittent feed-motion to the rolls. The extent of this feed-motion may be regulated as desired by making additional pin-holes f^5 and h^3 in the arms F and H^5, respectively, in which the bar F^2 may be pivoted to give a greater or less vibratory movement

to arm F. This adjustment should be made to correspond to the different lengths of bolts or rivets required.

A guide-tube, C, having a bore equal to the size of rod which is to be worked, is arranged in the line of feed, and it is secured by passing through a block or bracket, C′, which is secured to one end or corner of the frame A. A binding-screw, C^2, or equivalent means may be employed to retain tube C in its proper endwise adjustment. A stop, C^3, is also arranged in the line of feed at a little distance from the end of tube C, and it is secured in block C^4 by binding-screw C^5 in substantially the same manner as tube C. The stop C^3 is also adjustable endwise, and it is set with its front or working face removed from the adjacent end of tube C a distance equal to the length of blank required to form the desired bolt or rivet.

Solid or undivided forming-dies a', a^2, a^3, and a^4, having therein open-ended cavities a, adapted in size and form to shape the desired stem and shank of the product, are arranged or seated in recesses or sockets e made in the face or periphery of the die head or holder E. These dies are arranged at equal distances apart, and they are secured by set-screws e'. In order to facilitate their removal when desired, notches e^2 are cut in the face or periphery of E. If preferred, other convenient means for securing the dies may be employed; but I prefer to make them readily removable, so that others of different size or form of cavity may be substituted. The thickness of these dies, or rather the length of cavity from end to end, should be equal to the length of stem and shank of the bolt or article required, and the die-cavities may be so shaped as to give a round, square, or oval shank, as illustrated in dies a', a^2, and a^4, respectively, Fig. 3.

The die head or holder E is mounted on the forward end of a shaft, E′, which is journaled in suitable bearings E^2 on the bed of frame A. The position of this shaft is such that by its rotation the dies a', a^2, a^3, and a^4 are brought successively between C and C^3, with their die-cavities in the line of feed, as at a', Fig. 2. In order that these dies may have a short period of rest in this line of feed, as well as at other points in their path of motion at equal distances apart, I provide for giving to the shaft an intermittent rotary motion as follows: On the rear end of shaft is mounted or keyed a disk-wheel, I, having an annulus or ring, I′, secured to its rear face. (See Fig. 3.) This annulus may be made solid with wheel I, if preferred. The inner edge of I′ is shaped or formed into four (this number depending upon the number of dies employed) curved or scroll-shaped inclines, i, leading to and from the same number of catches or hook-seats i'. A reciprocating rod, c, having a sidewise bent or hooked end, c', is so arranged that its hook c' rides on or moves over the inclines i, and in so doing drops successively into the seats i', and upon the back or reverse stroke of c the shaft E′ will be given a part turn, in which position it will remain until again moved by the next reverse stroke of c. It is during the periods of rest thus secured in the rotation of the dies that the several operations of feeding, heading, and discharging the bolts or rivets are performed, and it is by the intermittent rotary movement thus secured that the several dies are carried from the point of performing one operation upon the article to the next point of operation. The length of stroke of rod c should of course be regulated according to the distance between the hook-seats i'. The hook c' is kept in place by a disk, c^2, secured in any convenient way, either to the end of shaft E′ or to other convenient support, the space between c^2 and I′ being sufficient to allow the hook to move with freedom.

The required reciprocating motion is given to rod c by coupling its outer end to arm K, as at c^3. This arm extends upward from rock-shaft K′, which is journaled in boxes K^2. A horizontal arm, K^3, carried on shaft K^2, is coupled by pin k and socket-joint k' to pitman K^4, the upper end of which is connected to disk-wheel L by socket-joint k^2, crank k^3, and pin k^4. The disk L is carried on the end of driving-shaft B, and the pin k^4 being placed out of the axial line of rotation, a vertically-reciprocating motion will be given to pitman K^4 by such rotation. This motion of K^4 will be converted into a horizontally-reciprocating motion in c by means of the connections described. The extent of this motion can be readily adjusted by varying the length of arms K or K^3, or by varying the distance of pin k^4 from the center of wheel L. This can readily be done by the skilled mechanic.

In order, however, to arrest the rotation of shaft E′ with precision, and thereby bring the dies a' a^2, &c., accurately to position, I provide ratchet-teeth or stops n on the periphery of annulus I′ or wheel I, and also pivot or hinge a stop-bar, N, to block N′, as at n'. This bar is extended backward over wheel I and shaft B, its rear end resting in a grooved cam, N^2. The walls of this groove serve as guides to hold bar N in place, while the base of the groove is so formed and adjusted as to raise the bar at each revolution of the shaft and lift it out of engagement with stops n, as in Fig. 1. The shaft E′ can then be given a part turn, as before described; but as such part turn is being made the full part of cam N^2 passes, allowing the stop-bar N to fall, so that the next succeeding stop n will strike against it and arrest the rotation of E′ with exactness and greater precision than would be attained without such stop device, owing to the play or lost motion which is incident to jointed connections. This stoppage of shaft E′ is adjusted to bring one of the forming-dies a', a^2, &c., to

the line of feed, as in Fig. 2, when the automatic feeding device, hereinbefore described, feeds the rod (it having been previously heated) through tube C and die a' (or whichever one may be in line therewith) against stop C^3. The dies, with the die-head E, are then given a quarter-turn, (four dies being employed,) by which movement that part of the rod projecting beyond tube C through the die is severed, and such severed blank is carried forward in the die to the point of performing the next or heading operation upon the blank, which, in the device shown, is at the first quarter-stop. This heading and upsetting device consists of an anvil-block, R, which is arranged to abut closely against the shearing end of the die at such stopping point, which block prevents the heading operation from forcing the blank out of the die in that direction; also, a movable header, R', is employed, carried by a block, R^2, which is arranged to slide in a dovetail groove made in the top of frame A. A shaft or bar, R^3, extends back from block R^2 and terminates in an enlarged end or head, R^4, which is so arranged as to be acted on by a wiper, r', carried on shaft B. This wiper gives to die R' its forward motion, while a spring, r^3, connected with head R^4 by rod or cord r^2, gives the reverse or backward movement. While the forming-dies are, in turn, at rest between R and R' the die R' is made to advance, upsetting the blank within the die and making the inclosed part conform to the die-cavity, while the protruding end is formed into a head, such head corresponding in form to the face r of the header. By properly adjusting stop C^3 the amount of metal in the blank protruding from that end of the forming-dies can be adjusted to the amount of upsetting and size of head required.

The die R' or its working-face r may, if desired, be made movable, so that others of different form may be substituted.

At the second point of rest in the rotation of dies a' a^2, &c., or directly under the line of feed, I secure in any convenient way a water tank or trough, T, in which the dies and the inclosed article rest for a short time, and through which they pass as they are turned. This trough may be kept supplied with water in any convenient way, and its purpose is not only to keep the dies in proper working condition, but also to facilitate the removal of the article from the dies by taking advantage of the shrinkage caused in cooling. If desired, a stream of water may also be directed onto the forming-dies after the heading operation has been performed.

At the third stop, or when the dies are in the position of a^4, Fig. 2, the article is discharged from the dies by means of a plunger, s, the end of which is seen in the cavity of a^4, while the body is shown by dotted lines. This plunger is carried by a frame, S, which is arranged to slide in a dovetail groove made in the top of the frame A. The side bar of sliding frame S is shown broken away in part the better to show the die and plunger. A shaft or bar, s', connects sliding frame S with a yoke, S', which incloses shaft B. Motion which carries plunger s into the die-cavities, and thus discharges the article, is given by wiper s^2, which is carried by the shaft B, and acts upon the rear side, s^3, of the yoke. A reverse or backward motion is given to the plunger by spring S^2, or by wiper s^2 acting against the front side of the yoke.

It will be observed that the several operations of feeding, heading, and discharging are performed simultaneously, and therefore that the time required for performing all of these operations is no greater than would be required for performing one alone; also, that the movement of the dies from one point of rest to the next, which movement is attended with or effects the shearing operation, requires no more time than the operation of the shear in machines heretofore used. I have thus greatly increased the manufacturing capacity of this machine over machines heretofore used; also, by the use of solid or undivided forming-dies I avoid the imperfections arising from the use of divided or part dies, such as fins and irregularities in form arising from the wearing away of the walls of the die-cavities at their edges.

While I have described my improved machine with four forming-dies arranged upon the die-head E, with four stops in each revolution of the same, still I do not limit myself to this or any particular number, as any number of such dies may be used if the stops in their revolution be properly arranged, so as to correspond thereto.

I claim herein as my invention—

1. The combination of feed-rolls d, gear-wheels D^2, for gearing the rolls together, vibrating arm F, ratchet F', keyed to one roll-shaft, pawl f, spring f', for holding the pawl upon the periphery of the ratchet, reciprocating bar F^2, arm H^5, rock-shaft H^4, arm H^3, yoke-bar H^2, yoke H', cam or eccentric H, and driving-shaft B, substantially as set forth.

2. The combination of plunger s, sliding frame S, arranged to move back and forth on the frame A, connecting-bar s', yoke S', wiper s^2, shaft B, and spring S^2, substantially as and for the purpose set forth.

3. The die-carrier E and shaft E', in combination with the wheel $I\,I'$, having scroll-shaped ratchets i i' sunk in its side face, reciprocating hook-rod c, arm K, rock-shaft K', arm K^3, pitman K^4, crank-wheel L, and shaft B, substantially as set forth.

4. In combination with the shaft E', a wheel, $I\,I'$, having in its side face scroll-shaped ratchets i i' and on its periphery a corresponding number of projecting stops, n, said stops having an abrupt front edge and sloping rear edge, with lever N, pivoted at one end to block N'

and arranged to bear on the periphery of wheel I I′, and the cam N², and shaft B, substantially as and for the purpose set forth.

5. A rotary die-head or carrier, E, having therein radial mortises *e*, opening on its periphery, and notches *e′* in the periphery between the mortises, as described, in combination with dies *a a′*, &c., adapted in form to seat in the mortises and binding-screws *e²*, passing from the wall of the notches to and against the dies within the mortises, substantially as set forth.

In testimony whereof I have hereunto set my hand.

JAMES MORGAN.

Witnesses:
R. H. WHITTLESEY,
C. S. PARKER.