F. FIGARI.

PORTABLE TESTING MACHINE.

APPLICATION FILED MAR. 27, 1919.

1,332,491.

Patented Mar. 2, 1920.

Fig. 1

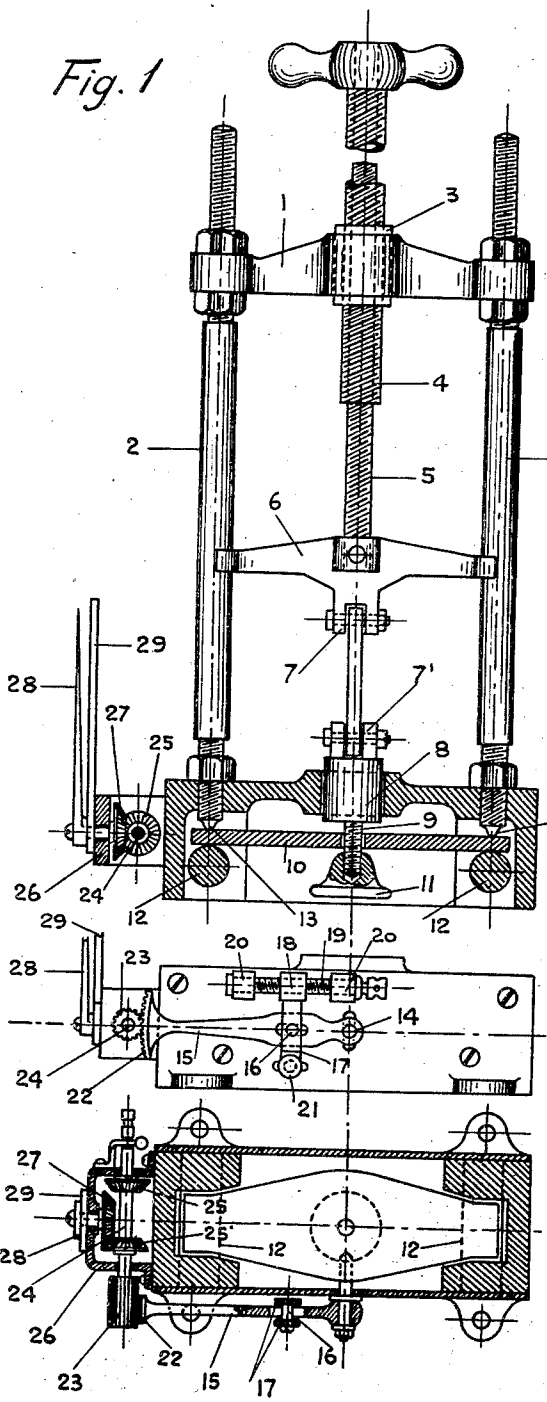

Fig. 5

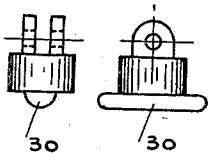

Fig. 2

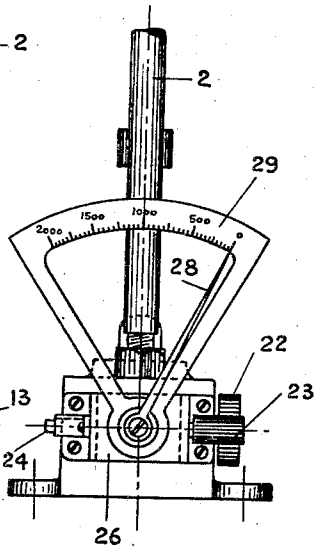

Fig. 3

Fig. 4

Inventor.
F. Figari.
By H. R. Kerslake
Atty.

UNITED STATES PATENT OFFICE.

FRANCESCO FIGARI, OF GENOA, ITALY.

PORTABLE TESTING-MACHINE.

1,332,491. Specification of Letters Patent. Patented Mar. 2, 1920.

Application filed March 27, 1919. Serial No. 285,687.

To all whom it may concern:

Be it known that I, FRANCESCO FIGARI, a subject of the King of Italy, residing at Genoa, Italy, have invented a new and useful Portable Testing-Machine, of which the following is a specification.

The invention relates to a portable testing machine in which a differential screw is employed for exerting strains upon the pieces under test, these strains being transmitted upon a plate, the deflections of which being utilized for the measurement of the exerted strains.

The invention also refers to a special device of registration of the strains exerted on the plate with utilization of the sustained deflections, by which device the indication of the compression as well as of the tension strains takes place by one graduation and with one indicator displaced in one direction only.

The invention is illustrated in a form of execution in the accompanying drawing in which:

Figure 1 is a front elevation of the machine with a sectional middle view of the pedestal.

Fig. 2 is a partial side view of the machine.

Fig. 3 is a front view of the pedestal of the machine.

Fig. 4 is a horizontal sectional view according to line A—B of Fig. 3 and

Fig. 5 shows a detail of the machine.

In these figures upon the cross bar 1 fastened with nut and counternut upon the columns 2 of the machine, is arranged the nut 3, which is penetrated by the two telescopic screws 4 and 5. The inner screws 5 is coupled with the cross bar 6, which travels by means of its jawed ends, preventing the rotation of this screw, upon the columns 2. The piece to be tested is fastened with one end within the jaw 7 of the cross bar 6 and with the other end within the jaw 7′ of the cylindrical body 8 which body slidably penetrating the pedestal of the machine, terminates with the pin 9. Pin 9 passes a hole of the plate 10 and is threaded into the body 11. The plate 10 is laterally and on the bottom supported by two pins 12 fastened on the pedestal of the machine, while two stops 13 are arranged opposite the pins 12 in contact with the upper surface of the plate. With the plate 10 is connected by the pin 14 the lever 15, having its fulcrum on the pin 16. The pin 16 is arranged on a movable block 17, shaped as a nut 18 in its upper part and supplied with a screw 19 supported against the wall of the pedestal by supports 20. The block 17 is supplied with a bolt 21 in its lower part, which allows to fix the position of the block and of the fulcrum of the lever 15 upon the wall of the pedestal. The lever 15 terminates on its other end with a toothed segment 22 engaging with the pinion 23, fastened on the shaft 24. The shaft 24 on which are keyed the two bevel gears 25 and 25′ can be displaced axially within the frame 26, so as to permit the engagement of the gear 25 or 25′ with the bevel gear 27 according as the machine will be subjected to compression or tensile strains and this for the purpose to obtain always the same sense of rotation of the gear 27 on its shaft on which is fastened the indicator 28 sliding on the graduation 29. In turning the screw 19 the block 17 is displaced and with it the pin 16 and in this manner the device of registration may be regulated before starting the machine, or if the substitution of a plate is requisite.

The parts illustrated in Fig. 1 allow of executing tensile tests on the test piece fastened within the jaws 7 and 7′. During this proceeding the plate 10 is bearing against the stops 13 and pushed in its central part by the block 11, deflects toward the top, the tensile strains exerted by the machine and corresponding with these deflections being registered by the indicator 28 and the graduation 29.

For compression tests the cylindrical body 8 of Fig. 1 is substituted by the block 8 of Fig. 5, which by its lower rib 30 causes the deflection of the plate 10 supported on the pins 12, the compression strains exerted by the machine corresponding with these deflections being registered again by the indicator 28 on the graduation 29.

The machine is just as well adapted for "Brinell" tests.

It is understood that there must always exist a difference between the pitches of the screws 4 and 5. The smaller this difference is, the bigger is the strain which can be exerted. According to studies and practical tests made by the inventor it results that the two pitches of the screws 4 and 5 must be very large ones and thus that the inclination of the thread of the driven screw will con-

stitute a bigger angle than the friction angle in order to obtain a good mechanical working of the screws.

Having thus described my invention, what I claim is:—

1. A portable testing machine including a differential screw for the exertion of tensile and compression strains, a plate to which the strains are transmitted, means for supporting the plate in a horizontal position and means associated with the central part of the plate for registering the deflections of the plate and thereby indicate the tensile and compression strains.

2. A portable testing machine including a differential screw for the exertion of tensile and compression strains and having a large pitch and a small difference between the pitches, a plate to which the strains are transmitted, stops engaging the upper and lower surfaces of the plate near the ends thereof and supporting the plate in a horizontal position and means associated with the central part of the plate for registering the deflections of the plate.

3. A portable testing machine comprising a differential screw for the exertion of tensile and compression strains, a plate to which the strains are imparted, means associated with the ends of the plate for supporting the plate in a horizontal position, a pivotal mounted lever one of which is associated with the central part of the plate, a toothed segment formed on the opposite end of the lever, a rotatably mounted shaft, a pinion carried by the shaft and meshing with the toothed segment, beveled gears carried by the shaft, a rockably mounted indicator and another gear coupled with the indicator and engageable by either one of the first mentioned gears for registering the deflections of the plate.

4. A portable testing machine including a supporting pedestal, a differential screw supported above the pedestal and designed for exerting tensile and compression strains, a plate arranged in the pedestal, stops mounted in the pedestal and engageable with the upper and lower surfaces of the plate near the ends thereof and supporting the plate in a horizontal position, a lever adjustably fulcrumed to the pedestal and having one end connected with the central part of the plate, a toothed segment formed on the other end of the lever, a shaft rotatably mounted on the pinion carried by the shaft and arranged in mesh with toothed segment, spaced beveled gears on the shaft, a rockably mounted indicator on the pedestal and another gear coupled with the indicator and designed to be engaged by one of the other beveled gears so as to register the deflections of the plate.

In testimony whereof I have signed my name to this specification in the presence of two subscribing witnesses.

FRANCESCO FIGARI.

Witnesses:
DOLFO DEBER,
WILLIAM P. SHOCKLEY.