ORIGINAL

194 DELWP 12
12 JUN 2012

USER EQUIPMENT AND METHOD FOR EXECUTING A SERVICE

Abstract of the Invention

User equipment and method for executing an application, which uses application data, and which is executed in an Application Server in a VoIP based telecommunications network. The method comprises providing a user equipment including a database having the data stored therein, wherein the user equipment further includes an Application Server. The method further comprises invoking the SIP-AS included in the user equipment by a network node of the telecommunications network, providing, within the user equipment, the data to the Application Server included in the user equipment, executing the application, using the data, by the Application Server included in the user equipment, and communicating a result of executing the application from the Application Server included in the user equipment to the network.

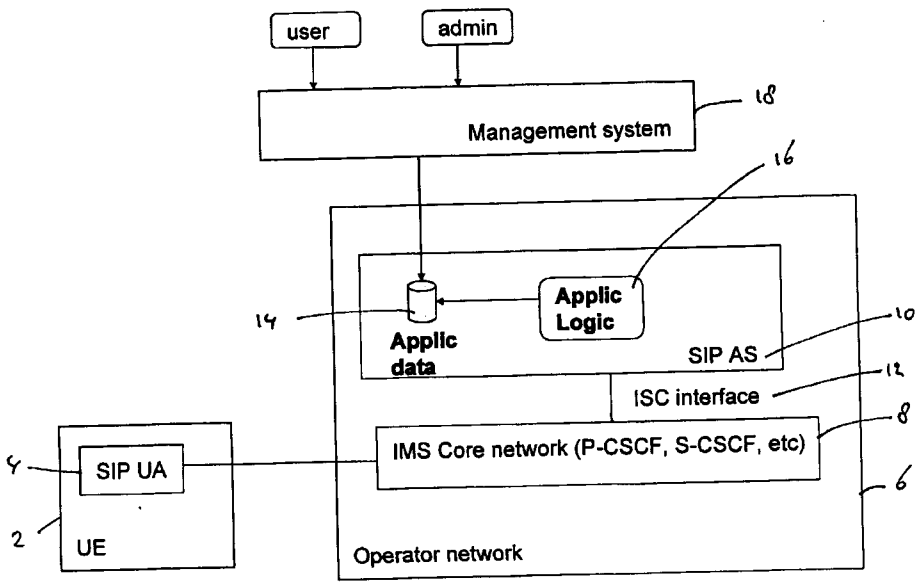

Fig. 1

WE CLAIM:

1. User equipment (2, 2A) for use in a Voice over Internet Protocol based telecommunications network (6), having associated therewith a User Agent (4) arranged for using an Internet Protocol based communications protocol, the user equipment comprising:

- a database storing data,
- an Application Server (24) using the Internet Protocol based communications protocol for executing an application,
- a data transfer unit (36) arranged for transferring data from the database to the Application Server, wherein the data remains within the user equipment,
- a first communications unit (20) arranged for communication between the User Agent and the telecommunications network, and
- a second communications unit (26) arranged for communication between the Application Server and the telecommunications network,

wherein the Application Server resides in an operator space of the user equipment, wherein the user equipment is arranged such that the user cannot alter software components contained in the operator space, and/or wherein the database resides in a user space of the user equipment, wherein the user equipment is arranged such that data included in the user space cannot be viewed by a network node.

2. User equipment (2,2A) according to claim 1, wherein the second communications unit (26) is arranged for providing secure communication, e.g. via a secure tunnel.

3. User equipment (2,2A) according to claim 1 or 2, wherein the second communications unit (26) is arranged for receiving from a network node an application and for deploying that application in the Application Server.

4. User equipment (2,2A) according to claim 1, 2 or 3, comprising a data management unit (32) arranged for managing the data included in the database, e.g. via a user interface of the user equipment.

5. User equipment (2,2A) according to any one of claims 1-4, comprising an access control unit (34) arranged for determining which portion of the data included in the database may be accessed by the user equipment based Application Server.

6. User equipment (2) according to any one of claims 1-5, wherein the User Agent (4) is included in the user equipment.

7. User equipment (2,2A) according to any one of claims 1-6, wherein the user equipment is arranged for use in a Session Initiation Protocol based telecommunications network, such as an Internet Protocol Multimedia Subsystem telecommunications network, wherein the client is a Session Initiation Protocol User Agent, and wherein the Application Server is a Session Initiation Protocol Application Server for executing a Session Initiation Protocol application.

8. Method for executing an application, using data, executed in an Internet Protocol based Application Server in a Voice over Internet Protocol based telecommunications network (6), comprising the steps:

- providing a user equipment (2,2A) associated with a subscriber including a database (30) residing in a user space of the user equipment,

wherein the user equipment is arranged such that data included in the user space cannot be viewed by a network node, having the data stored therein, wherein the user equipment further includes an Internet Protocol based Application Server (24) residing in an operator space of the user equipment, wherein the user equipment is arranged such that the user cannot alter software components contained in the operator space,

- performing communication between a User Agent associated with the subscriber and the telecommunications network,
- invoking the Internet Protocol based Application Server included in the user equipment by a network node of the telecommunications network,
- providing, within the user equipment, the data to the Application Server included in the user equipment,
- executing the application, using the data, by the Application Server included in the user equipment, and
- communicating to the network a result of executing the application from the Application Server included in the user equipment.

9. Method according to claim 8, wherein communication between the Internet Protocol based Application Server (24) included in the user equipment and the network is secure communication, e.g. via a secure tunnel.

10. Method according to claim 8 or 9, including deploying an application in the Internet Protocol based Application Server (24) included in the user equipment by a network node of the network.

11. Method according to claim 8, 9 or 10, including managing, e.g. adding, deleting and/or modifying, the data included in the database, e.g. via a user interface of the user equipment, by the user.

12. Method according to any one of claims 8-11, including controlling, by the user, which portion of the data included in the database may be accessed by the user equipment based Internet Protocol based Application Server.

13. Network node for use in a Voice over Internet Protocol based telecommunications network, such as a Session Initiation Protocol based telecommunications network, arranged for deploying an application in a user equipment according to claim 3, or any one of claims 4-7 as far as dependent on claim 3.

Dated this the 12th day of June, 2012

Manisha Singh Nair

MANISHA SINGH NAIR
Agent for the Applicant [IN/PA-740]
LEX ORBIS
Intellectual Property Practice
709/710, Tolstoy House,
15-17, Tolstoy Marg,
New Delhi-110001

5194 DELNP 12

12 JUN 2012

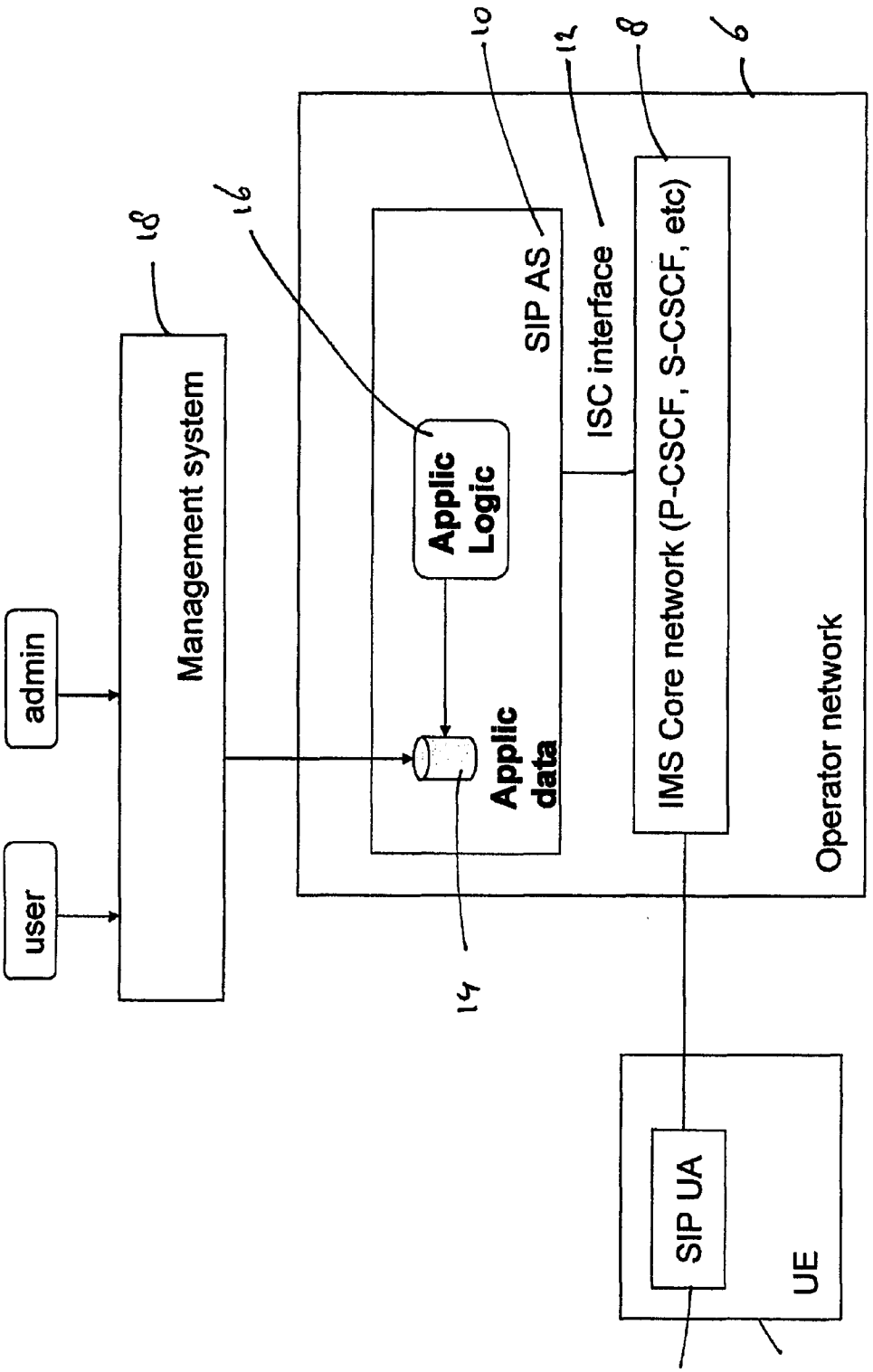

Fig. 1

MANISHA SINGH NAIR
Agent for the Applicant [IN/PA –740]
LEX ORBIS IP PRACTICE

1194 DELNP 12
12 JUN 2012

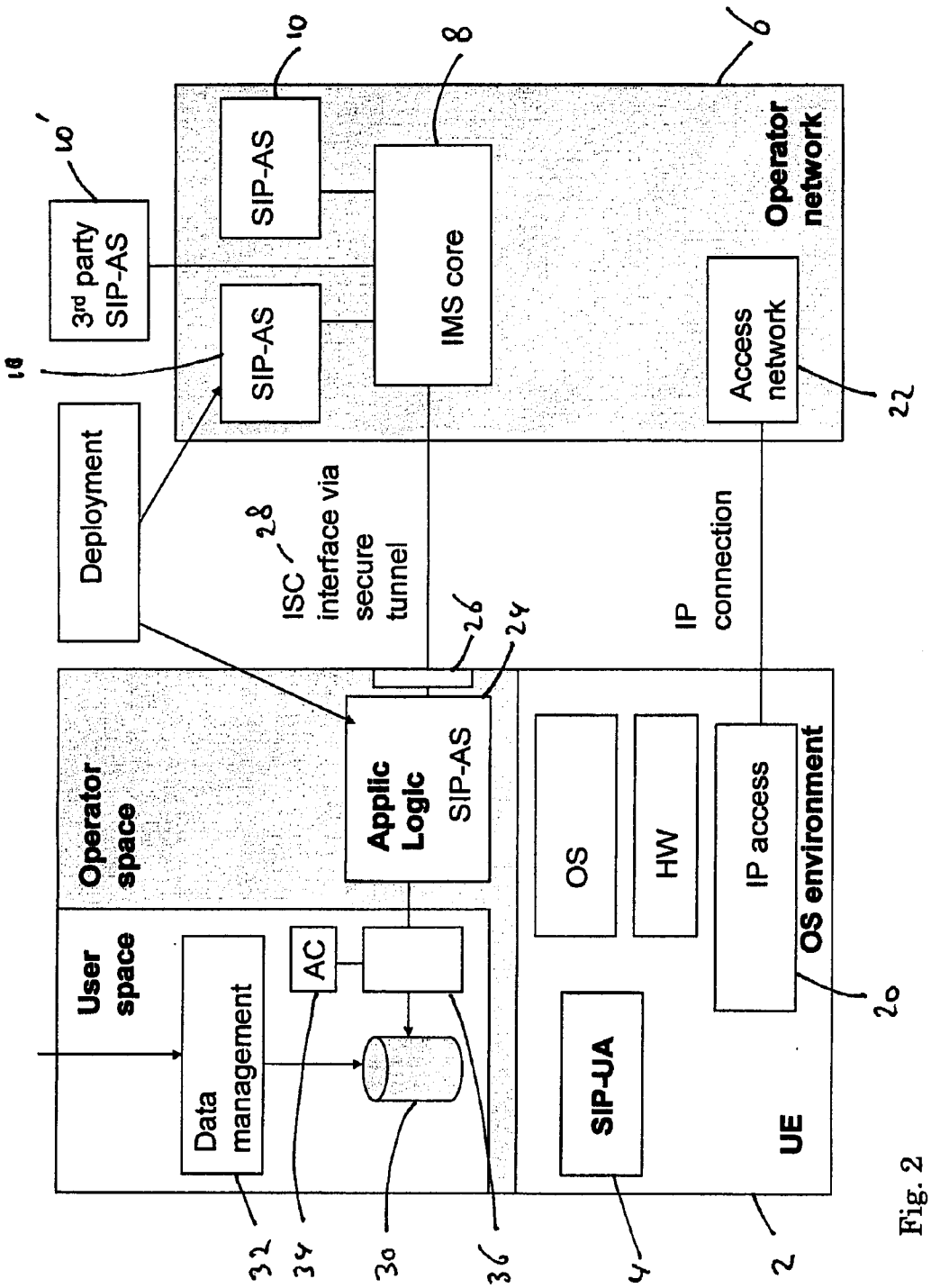

Fig. 2

Manisha Singh Nair

MANISHA SINGH NAIR
Agent for the Applicant [IN/PA –740]
LEX ORBIS IP PRACTICE

5194 DELNP 12
12 JUN 2012

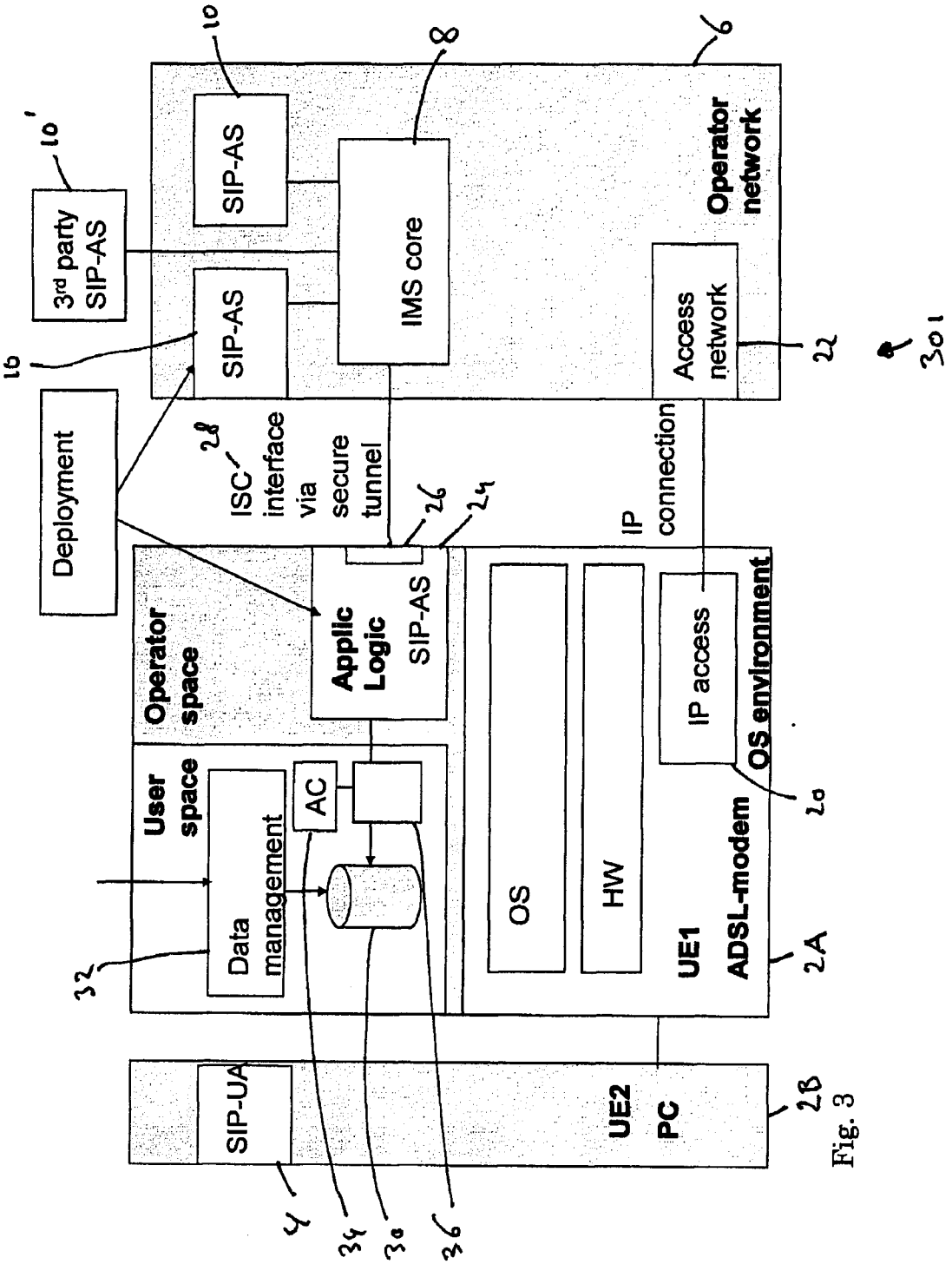

Fig. 3

Manisha Singh Nair

MANISHA SINGH NAIR
Agent for the Applicant [IN/PA –740]
LEX ORBIS IP PRACTICE

5194 DELNP 12
12 JUN 2012

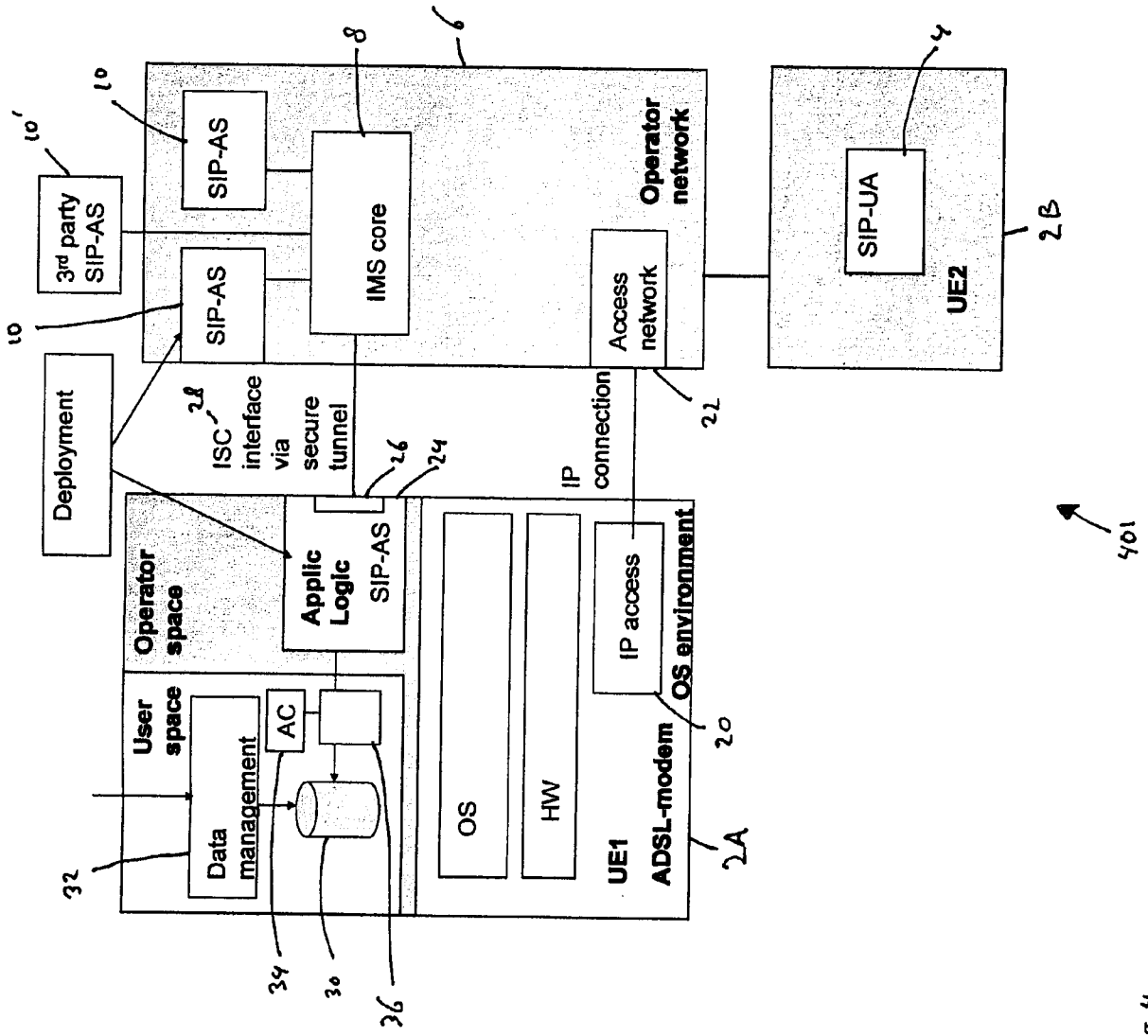

Fig. 4

Manisha Singh Nair
MANISHA SINGH NAIR
Agent for the Applicant [IN/PA –740]
LEX ORBIS IP PRACTICE

5194 DELNP 12

12 JUN 2012

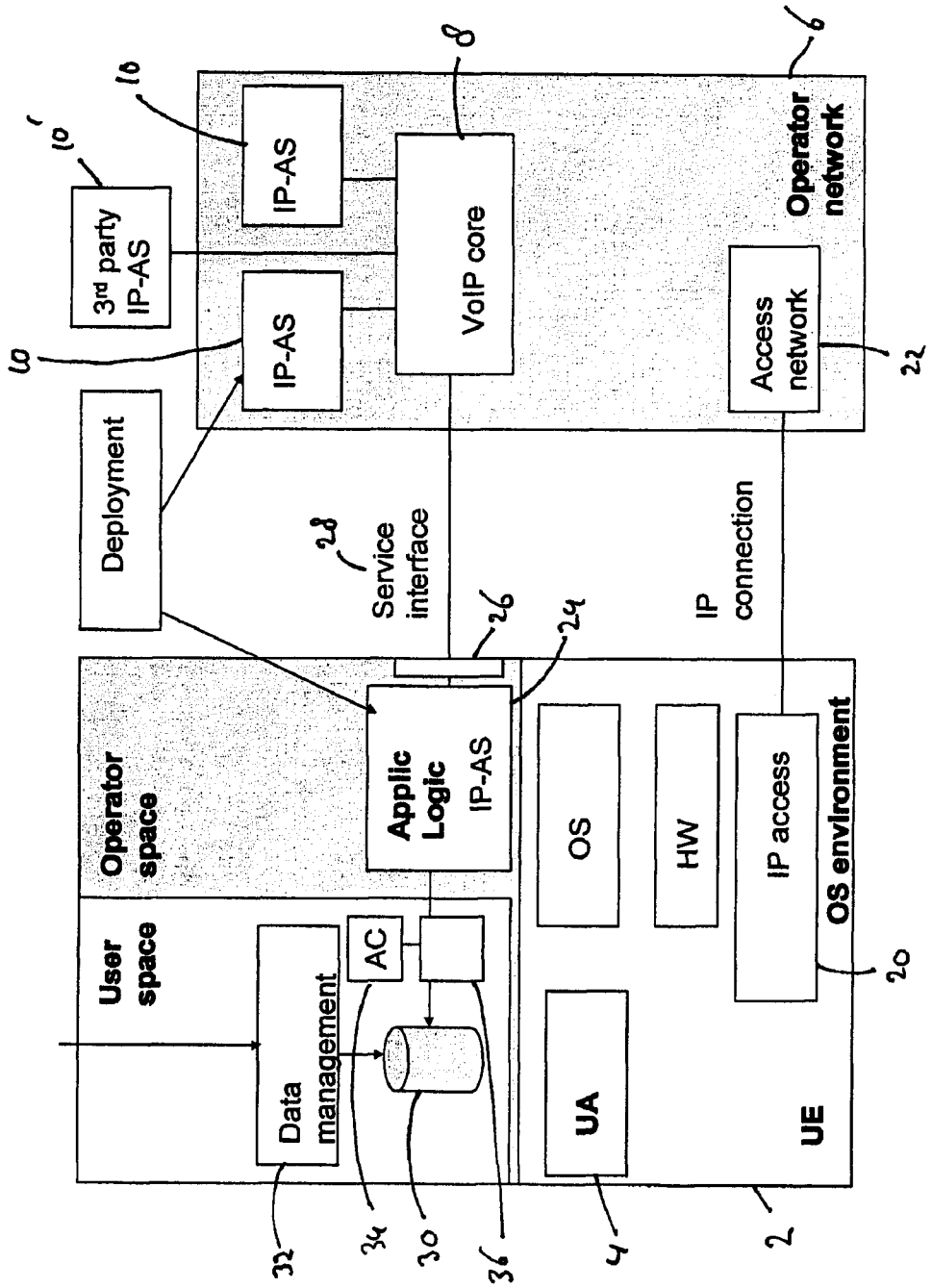

Fig. 5

Manisha Singh Nair

MANISHA SINGH NAIR
Agent for the Applicant [IN/PA –740]
LEX ORBIS IP PRACTICE