United States Patent

[11] 3,594,937

[72] Inventor **Charles R. Luchsinger**
Glen Cove, N.Y.

[21] Appl. No. **880,658**
[22] Filed **Nov. 28, 1969**
[45] Patented **July 27, 1971**
[73] Assignee **Norcross, Inc.**
New York, N.Y.

[54] **SOUND-EMITTING DEVICE**
10 Claims, 6 Drawing Figs.

[52] **U.S. Cl.** **40/124.1,** 40/28.1
[51] **Int. Cl.** **G09f 1/00**
[50] **Field of Search** ..... 46/175, 189; 40/28.1, 124.1, 126 A

[56] **References Cited**
UNITED STATES PATENTS

2,148,279	2/1939	Sandberg	40/124.1
2,824,394	2/1958	Lohnes	40/126 A X
2,906,058	9/1959	Barker	46/175
2,974,434	3/1961	Gibson	40/126 A X
3,092,927	6/1963	Luchsinger	40/28.1 X

Primary Examiner—Lawrence Charles
Assistant Examiner—Wenceslao J. Contreras
Attorney—Howard C. Miskin

ABSTRACT: A display device has a pair of panels foldable along a fold line. Portions of each panel adjoining a common section of the fold line are moveable outwardly from the panel during folding. These portions are defined by cuts in the panels which intersect the fold line with other fold lines connecting corresponding ends of these cuts. One of the panels has a layer beneath its corresponding moveable portion. A flexible arm mounted on one portion of the moveable panel slideably rubs the facing surface of the lower layer during opening movement of the panels, thereby emitting a sound.

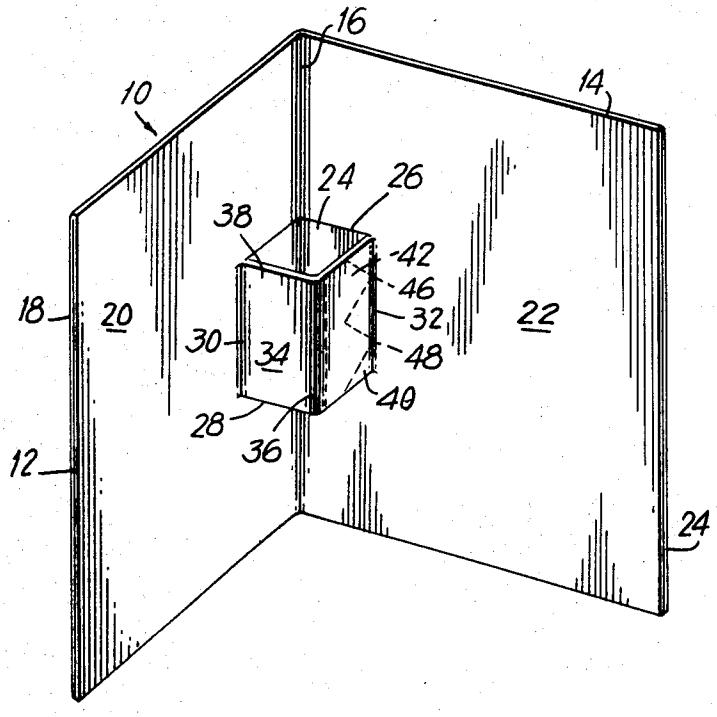

FIG. 1

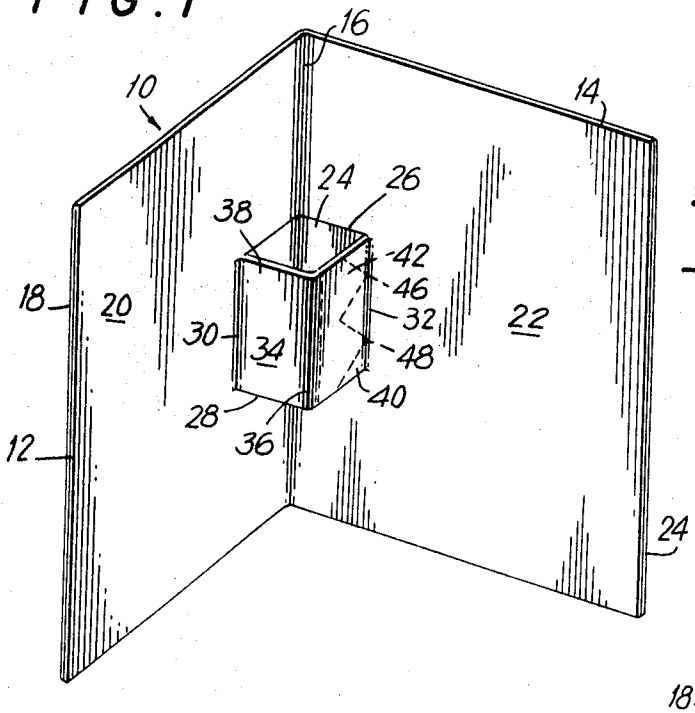

FIG. 2

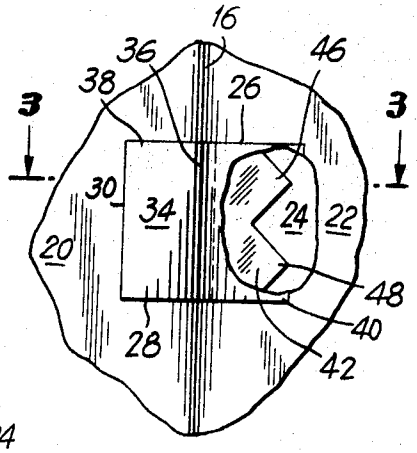

FIG. 3

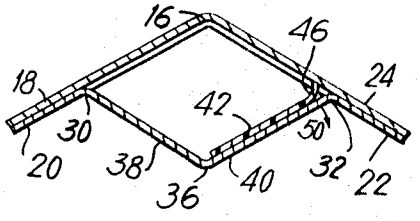

FIG. 4

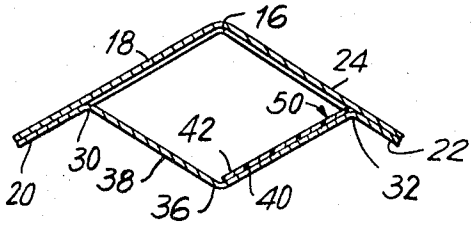

FIG. 5

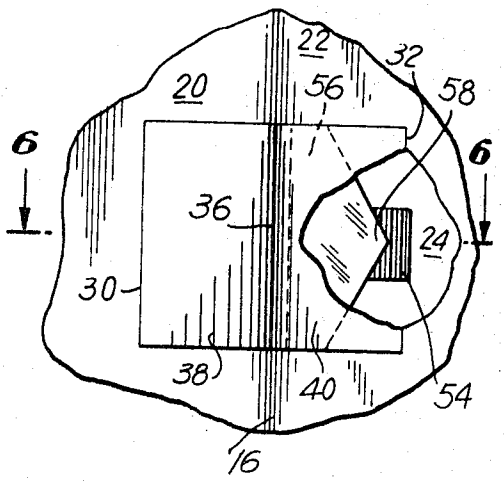

FIG. 6

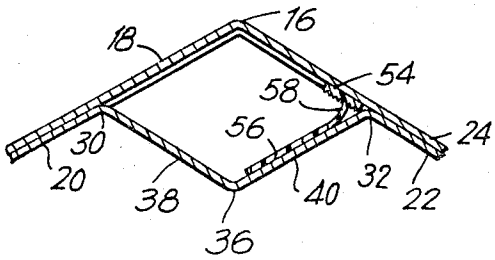

INVENTOR.
CHARLES R. LUCHSINGER
BY Howard C. Makin
ATTORNEY

SOUND-EMITTING DEVICE

This invention relates to display devices in general, and more particularly relates to a sound-producing greeting card or greeting card folder which when folded lies flat and when opened emits a sound of a predetermined characteristic.

Various attempts have been made to provide display devices, greeting cards or folders which emit sounds and noises in conjunction with the visual presentation normally provided. Heretofore, clickers, snappers, whistlers and rubberbands had been used with such devices to make noise or sound when actuated in some manner, such as when compressed. However, most of these types of noisemakers are not satisfactory, when used in greeting cards or devices intended to be sent by mail, since they are bulky and ordinarily prevent the greeting card, device or folder from lying flat when folded, and also require a heavier paperboard to be used to prevent the individual sheets from tearing when the noisemakers are operated. Additionally, these noisemakers are relatively expensive and not ordinarily self-actuating, but require a separate actuating movement of the user for operation such as compressing the noisemaker. Additionally, the characteristics of the sound obtained from these noisemakers is limited by the type Of device used and are difficult to incorporate in the card or device.

According to the present invention, a greeting card or display device is provided which emits a sound of a predetermined characteristic automatically when the greeting card is opened. The sound emitted is normally of a low pitch and can continue for substantially the duration of the opening operation.

It is an object of the present invention to provide a greeting card made of conventional paper which lies flat when folded and may be inserted in an ordinary mailing envelope and which provides sound when opened without a separate actuating effort by the user.

Another object of the present invention is to provide a greeting card which emits the sound whenever opened or closed and which characteristic of the sound can be easily varied to achieve the desired effect.

Still another object of the present invention is to provide a greeting card or other type of display device which produces sounds of a predetermined characteristic when the device is opened, and which requires no special sound-producing device or special means of mounting the device.

Yet another object of the present invention is to provide a greeting card which accomplishes all of the above and which is inexpensive, simple and economical to manufacture, positive in operation and durable in use and storage.

Other and more detailed objects of the invention will be apparent when the following description is considered in connection with the annexed drawings in which:

FIG. 1 is a perspective, elevational view of a display device in the form of a greeting card containing one embodiment of the present invention in semiextended position;

FIG. 2 is a fragmentary plan view of the flap construction with a portion broken away to show part of the sound emitting structure;

FIG. 3 is a cross-sectional view taken along line 3–3 of FIG. 2 during the opening of the card;

FIG. 4 is a view similar to FIG. 3, showing the card in its open position relative to the sound-emitting structure;

FIG. 5 is a plan view of the flap construction similar to FIG. 2 of a further embodiment; and

FIG. 6 is a cross-sectional view taken along line 6–6 of FIG. 5.

Similar reference numerals in the different views refer to similar elements.

Referring now to the drawings, a device in the form of a greeting card **10** is shown embodying the features of this invention, which is made advantageously from a single sheet **12** of paper, cardboard or the like. Sheet **12** is advantageously scored, at **14** and **16**, so as to divide sheet **12** into four integral

panels or sections, **18**, **20**, **22** and **24**. As shown, panels **18** and **24** are the front and rear faces, respectively, of card **10** when in the closed or shut position, and panels **20** and **22** form the inner surfaces of card **10** and abut, when card **10** is folded. Thus, card **10** has two main panels of a double thickness which are folded about a central fold line **16**. If desired, sheet **12** need only have one panel or section of a double thickness. Ordinarily, the top surface of front panel **18** bears various indicia or designs.

As shown, panels **20** and **22** have a pair of spaced-apart, longitudinally extending slits or cuts therein, **26** and **28**, which intercept a fold line **16** and are shown parallel. Disposed between corresponding ends of slits **26** and **28** are transverse scored or fold lines **30** and **32**. As shown, score line **30** is in panel **20**, and score line **32** is in panel **22**. Slits **26** and **28** and fold lines **30** and **32** define an area or flap **34**. Flap **34** is divided by a score or fold line **36** into a pair of panels **38** and **40**. Fold line **36** is contained within a plane passing through fold line **16** and bisecting the angle formed by panels **20** and **22**, and is parallel therewith.

Mounted on the inner surface of panel **40** of flap **34** is the sound or noise-making element **42**, which is preferably a thin, flexible plastic strip. As shown, noisemaker **42** has a pair of pointed ends **46** and **48**, which extend beyond fold line **32** and engage or touch the inner surface of panel **24**.

The card is formed by folding sheet **12** about fold line **14** so that the rear faces of panels **18** and **24** abut the rear faces of panels **20** and **22**, respectively. The corresponding rear faces are secured together normally in some convenient manner, such as by placing adhesive therebetween or stapling. When panels **18** and **20**, and **22** and **24** are folded as shown in FIG. **1**, the panels are of double thickness with a continuous front and rear face. This is desirable since the front face of the card can be fully utilized for printing a message or design or other indicia. While panels **22** and **24** are shown both with a double thickness, in view of the sound emitter **42** being mounted on panel **40**, panel **20** need have only a single thickness. If the sound emitter **42** is mounted on panel **38** and engages the rear surface or face of panel **18**, then panel **22** need be only single thickness.

Sheet **12** is further folded transversely on fold line **16** so that panels **20** and **22** abut when in the closed position. Panels **38** and **40** are folded outwardly along fold lines **30**, **36** and **32**, with fold line **36** moving in a direction opposite to fold line **16**. When card **10** is folded closed it can be conveniently mailed in a conventional envelope. The rear surface of panel **38** is juxtaposed against the rear surface of panel **40** so that card **10** lies relatively flat in its closed position. In this folded position noisemaker **42** is out of engagement with the inner surface of panel **24**.

When card or folder **10** is unfolded to the position shown in FIG. **1**, panels **38** and **40** of flap **34** are drawn inwardly toward panels **20** and **22** respectively. With panel **40** being moved toward panel **22** the tooth edges **46** and **48** are flexed and moved along the inner surface of panel **24** away from fold line **16**, in the direction of arrow **50**, as illustrated in FIGS. **3** and **4**. The rubbing movement of teeth **46** and **48** of element **40** across the surface of panel **24**, during the normal card unfolding process provide a relatively low-pitched, intermittent sound much like the squeaking of an unoiled door. The sound has characteristics which can be determined in part by the size and material of strip **42**, and the type of material,which it engages. The sound is continuously emitted during the movement of strip **42** until the teeth no longer engage the surface of panel **24** somewhere where the card is substantially open.

In refolding card **10**, panels **38** and **40** move outwardly and teeth **46** and **48** of strip **42** move in a direction opposite to that shown by arrow **50**, and the panels and strip **42** assume the position of the originally closed position. Teeth **46** and **48** in moving along the surface of panel **24** again emit a sound or noise and the card is again in condition for emitting a sound automatically when the card is opened.

In the embodiments shown in material, which 5 and 6 a serrated, grooved or notched strip 54 is attached to the rear surface of panel 24, so as to be engaged by the free edge of sound emitter 56 mounted on the rear surface of panel 40. As shown in FIG. 5, strip 56 has a single pointed edge 58 which engages the serrated or grooved strip 54. With the use of a grooved strip 54, a different, more intermittent sound is obtained.

While sound emitter strips 42 and 56 were indicated as made of plastic they may be made of other materials including cardboard, paper or the like. They may be fastened or attached to panel 40 in any convenient manner, and have various shapes and forms. While pointed edges are shown, flat edges may be used.

While panels 38 and 40 of flap 34 were shown cut from panels 20 and 22 respectively, a separate sheet of material can be mounted on panels 20 and 22 to fold in a similar manner as panels 38 and 40. With this construction only a single thickness of panels 20 and 22 need be used. With the flap formed of a separate strip, the flap could be folded inwardly when the card is closed and move outwardly when the card is opened to emit sound. Also, the sound emitter member 42 and 56 were shown mounted on rear panel 22, but it could be easily mounted on front panel 20. A strip 54 could be made of plastic, cardboard paper or the like.

While the embodiments disclosed in the drawings show the slits being parallel and transverse to the fold line 16, the slits in panels 20 and 22 can be at varying angles to each other and to fold line 16, and which intersect at fold line 16. Similarly, the lower slits in each panel, indicated at 28, could be at different angles with respect to the upper slits, as well as to the slits in panels 20 and 22, whereby flap 34 can take varying shapes. Further, flap 34 can have various fold lines so as to assume different shapes during the opening and closing of panels 20 and 22.

There is thus shown a greeting card or display device with an outside face provided with a design, illustrative material or printed matter of some type, and having some type of sound emitted automatically upon the opening and closing of the card, yet which card can be formed inexpensively of paperboard or paper and mailed in its folded position in an ordinary and conventional type of envelope. The sound-producing member is inexpensive, and durable in storage, easily mounted during the fabrication of the card, and requires no special further acts of the receiver to actuate.

It has been found that if the panel against which the sound actuator acts is glued to its facing panel, different pitch sounds are produced depending on the degree of attachment. The combined panels act as a larger sounding board and produce a deeper sound. If the panels are not joined, i.e., panels 22 and 24, the sound pitch emitted during opening and closing the card will vary depending on how the card is held during opening.

Since many apparently differing structures may be readily devised by those skilled in the art without departing from the scope of the invention, it is understood that the foregoing description is illustrative only, the scope of the invention being defined solely by the claims granted.

What I claim is:

1. A display device comprising sheet material, scored and foldable along a panel fold line to provide a pair of connecting panels, a flap having each of a pair of ends hingedly mounted on a respective panel and extending across the panel fold line, said flap having a fold line responsive to the closing of said device for folding said flap, whereby said device is adapted to lie flat in its closed position, and a flexible strip mounted on the inner surface of said flap having one edge adapted to engage the surface of the panel facing said flap, said edge of said flexible strip being slideably moved across said surface of said panel, and vibrated thereby in response to the folding of said flap during opening and closing of said device, said strip emitting sound in moving across the surface of said panel during the opening of said device.

2. The device as claimed in claim 1 wherein said flap is formed by free central portions of said panels adjacent said panel fold line.

3. A device as claimed in claim 1 wherein said edge of the flexible strip which engages and slides across the surface of said panel is pointed.

4. A device as in claim 1 wherein said panels contain spaced apart slits intersecting said panel fold line and second and third transverse fold lines in said respective panels between corresponding ends of said slits, said slits and said second and third transverse fold lines defining said flap.

5. A device as claimed in claim 4 wherein said strip extends beyond its corresponding transverse fold line to engage said panel surface.

6. A device as in claim 1, further including a strip mounted on the inner surface of said panel and adapted to be engaged by the edge of said flexible strip for cooperating in emitting a sound in response to relative movement between said member and said strip.

7. A device as in claim 6 wherein said strip has a series of grooves transverse to the movement of said flexible strip.

8. A device as in claim 1 wherein said flap is folded in a direction opposite to said panel fold line.

9. A device as in claim 2 wherein said panel engaged by said flexible strip is double thickness.

10. A device as in claim 9, wherein said double thickness panels are joined together.