(19) Europäisches Patentamt
European Patent Office
Office européen des brevets

(11) **EP 4 560 041 A1**

(12) **EUROPEAN PATENT APPLICATION**
published in accordance with Art. 153(4) EPC

(43) Date of publication:
28.05.2025 Bulletin 2025/22

(21) Application number: **22942969.1**

(22) Date of filing: **24.11.2022**

(51) International Patent Classification (IPC):
C22C 38/02 *(2006.01)* ***C22C 38/04*** *(2006.01)*
C22C 38/42 *(2006.01)* ***C22C 38/46*** *(2006.01)*
C22C 38/06 *(2006.01)* ***C21D 8/00*** *(2006.01)*
B22D 11/111 *(2006.01)* ***C21C 5/36*** *(2006.01)*
C22C 33/06 *(2006.01)* ***C21C 7/00*** *(2006.01)*
C21C 7/10 *(2006.01)* ***C21C 7/06*** *(2006.01)*
B21B 1/46 *(2006.01)* ***B21B 45/00*** *(2006.01)*
B21B 45/02 *(2006.01)*

(86) International application number:
PCT/CN2022/133957

(87) International publication number:
WO 2024/016543 (25.01.2024 Gazette 2024/04)

(84) Designated Contracting States:
AL AT BE BG CH CY CZ DE DK EE ES FI FR GB GR HR HU IE IS IT LI LT LU LV MC ME MK MT NL NO PL PT RO RS SE SI SK SM TR
Designated Extension States:
BA
Designated Validation States:
KH MA MD TN

(30) Priority: **20.07.2022 CN 202210851313**

(71) Applicant: **Shandong Iron and Steel Company Ltd.**
Jinan, Shangdong 271104 (CN)

(72) Inventors:
- **ZHAO, Peilin**
  Jinan, Shandong 271104 (CN)
- **WANG, Jianjun**
  Jinan, Shandong 271104 (CN)
- **ZHANG, Pei**
  Jinan, Shandong 271104 (CN)
- **LU, Feng**
  Jinan, Shandong 271104 (CN)
- **WU, Wenjian**
  Jinan, Shandong 271104 (CN)
- **MA, Zuocang**
  Jinan, Shandong 271104 (CN)
- **KONG, Lingkun**
  Jinan, Shandong 271104 (CN)
- **LI, Chao**
  Jinan, Shandong 271104 (CN)
- **LIU, Hongyin**
  Jinan, Shandong 271104 (CN)
- **LI, Dong**
  Jinan, Shandong 271104 (CN)

(74) Representative: **Bryn Aarflot AS**
Patent
Stortingsgata 8
0161 Oslo (NO)

(54) HIGH-STRENGTH AND HIGH-TOUGHNESS HOT-ROLLED H-SHAPED STEEL FOR BUILDING AND PREPARATION METHOD THEREFOR

(57) The present invention belongs to the technical field of steel smelting and rolling forming, in particular to a high-toughness hot-rolled H section steel for buildings and a preparation method therefor. The hot-rolled H section steel includes chemical components in percentages by weight (wt%): C: 0.06 to 0.10; Si: ≤ 0.25; Mn: 0.8 to 1.30; P ≤ 0.015; S ≤ 0.008; Cu: 0.15 to 0.25; Cr: 0.25 to 0.60; Ni: 0.10 to 0.19; V: 0.01 to 0.03; Al: 0.01 to 0.03; RE: 0.009 to 0.019; As + Sn + Zn + Pb + Ca + Mg: ≤ 0.035; N: <0.008; T. [0]: ≤ 0.002, and the balance being Fe and unavoidable impurities. The present invention realizes weight reduction of a building structural steel, and simultaneously has good corrosion resistance, Z-direction properties, low temperature resistant toughness and other comprehensive properties, thereby completely meeting engineering requirements of the existing prefabricated building structural steel.

EP 4 560 041 A1

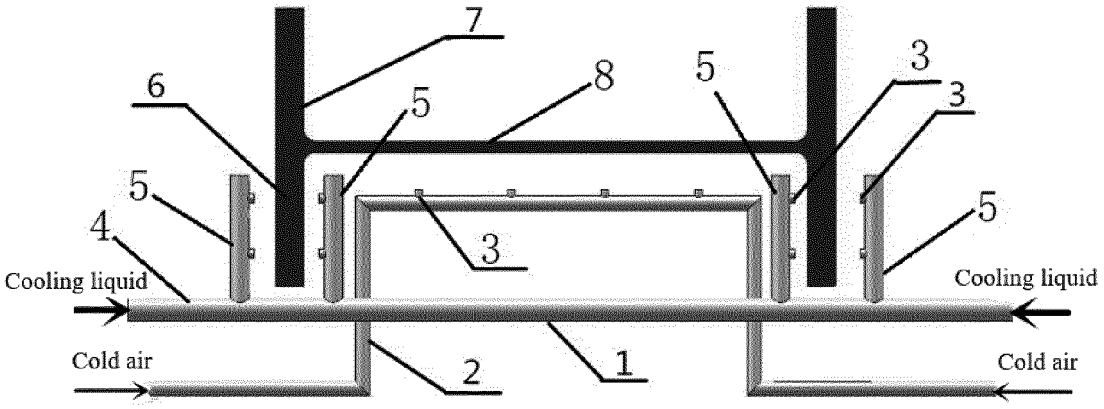
7
6
5
8
5
3
3
5
4
3
5
Cooling liquid
Cooling liquid
Cold air
2
1
Cold air

FIG. 1 (a)

Description

CROSS-REFERENCE TO RELATED APPLICATIONS

[0001] This application claims priority to Chinese Patent Application No.202210851313.2 filed on July 20, 2022, which is hereby incorporated by reference in its entirety.

TECHNICAL FIELD

[0002] The present invention belongs to the technical fields of steel smelting and rolling forming, in particular to a high-toughness hot-rolled H section steel for buildings and a preparation method therefor.

BACKGROUND

[0003] With gradual improvement of quality requirements for domestic construction projects, China has put forward higher requirements for development of building structural steel. Especially in an aspect of prefabricated buildings, China has introduced policies one after another and increased efforts to promote. The prefabricated buildings have good seismic properties, light weight, fast construction speed, high degree of industrialization, high prefabrication rate of components and other technical advantages. Use of a steel structure meets inherent prefabrication advantages. A construction period has greater advantages compared with a traditional one. Components of a prefabricated steel structure are mostly steels, which are green environmental protection building materials, and compared with concrete, have incomparable advantages of green environmental protection in aspects of recycling and secondary utilization. A proportion of the prefabricated buildings in China is much lower than that in developed countries. Therefore, China requires that, in accordance with requirements of applicability, economy, safety, green and beauty, innovation in construction modes is promoted, prefabricated concrete buildings and steel structure buildings are vigorously developed, a proportion of prefabricated buildings in new buildings is continuously increased, properties of fire prevention and corrosion prevention and technical measures of the steel structure buildings are perfected, applications of a hot-rolled H section steel, a weather resistant steel and a fire resistant steel are increased, and comprehensive development of key technologies and related industries of the steel structure buildings are promoted.

[0004] The hot-rolled H section steel serves as a main material of a building structure, and higher requirements are raised for the hot-rolled H section steel for its mechanical property, corrosion resistance, fire resistance and structural stability under different working conditions. Among them, lamellar tearing resistance has become an important indicator to ensure the safety and structural stability of the building structural steel. A lamellar tearing resistant steel is also called a Z-direction steel, which mainly uses reduction of area Z of a tensile test in a thickness direction of a steel plate to evaluate the lamellar tearing resistance. For a steel with a thickness of more than 15 mm, Z-direction lamellar tearing resistant capability is generally required to be tested as long as tension or fatigue stress along the plate thickness direction is generated in a structural component. For an ordinary building structural steel, only a Z-direction property indicator of a flange is required, and a Z-direction property indicator of a web is hardly required. Therefore, in order to meet requirements of steels for prefabricated buildings and high-rise buildings, Z properties of flanges and webs, which are important indicators of excellent lamellar tearing resistance, meet the requirements at the same time, and difficulty increases along with increase of a thickness.

[0005] Patent CN113564480A discloses a heavy hot-rolled H section steel with Z-direction properties and a production method therefor. The hot-rolled H section steel includes following chemical components: C, Si, Mn, Nb, Ti, N, B, Als, the balance being Fe and unavoidable impurities. The production method includes following steps of molten iron pretreatment → converter smelting → argon blowing refining → RH → beam blank whole protective casting → piling and slow cooling → rolling → air cooling after rolling. In the present invention, by reasonable component proportioning and process control, by a process of break-down rolling + universal rolling + air cooling after rolling and by a mode of combining phase change + precipitation + grain refinement for strengthening, a precipitation amount of second phase particles is controlled, a content of granular bainite after rolling is obtained to be 10 to 20%, such that the heavy hot-rolled H section steel with a flange thickness less than 80 mm has excellent toughness and Z-direction properties, and the Z-direction properties are 65-80%. This patent realizes strengthening by a bainite microstructure. However, the bainite is related to a cooling rate, resulting in large control difficulty to obtain a stable and homogeneous bainite microstructure. Meanwhile, a bainite steel has no obvious yield phenomenon.

[0006] Patent CN103334051B discloses a hot-rolled H section steel with Z-direction properties for buildings and a production method therefor. By optimize a smelting process and a rolling process and strictly controlling a product quality control mean and a product production process, this invention obtains a steel grade with excellent Z-direction properties and mechanical properties. The H section steel includes chemical components in percentages by weight: C: 0.06 to 0.18%; Si: 0.10 to 0.25%; Mn: 0.90 to 1.60%; V: ≤ 0.01%; Nb: ≤ 0.060%; Ti:≤ 0.030%, and the balance being Fe and

unavoidable impurities.

[0007] Patent CN102418037B provides a hot-rolled H section steel with lamellar tearing resistance and a production method therefor. According to the method for preparing the H section steel of the present invention, instead of Al deoxidation, Si is added to molten steel during tapping to adjust the Si in the molten steel to be 0.10-0.15% of a total weight of the molten steel for Si-killed deoxidation, and then at least one of Ti and Zr with a predetermined amount is added to the molten steel, wherein a required Si content of the steel grade can be supplemented during refining. The hot-rolled H section steel provided by the present invention has lamellar tearing resistance and can meet Z-direction property requirements on a certain thickness direction.

[0008] In the prior art, simple microalloying is not beneficial to improving surface quality of a casting blank, and improvement of toughness is severely restricted; and meanwhile, an overhigh C content is easy to cause welding defects, load of a rolling mill is caused to be large, a rolled piece is bent and deviated, a dimension is not easy to control, requirements on equipment are high, and comprehensive properties of the H section steel and a qualified rate of a dimension of a finished product are relatively low.

[0009] In current production of a shape steel, controlled cooling has been a serious problem that puzzles property heterogeneity. Especially for a heavy gauge product, there is a large thickness difference between a flange and a web, and use of a single cooling mode has a great impact on final properties, meanwhile, on heterogeneity of the Z-direction properties, resulting in a large difference and affecting structural safety. How to solve this problem, considering both cost and efficiency, has always been one of difficult problems in the industry. Some enterprises adopt ultra-fast cooling equipment, which, however, is large in investment, and improper in economy for a product with a single requirement. Therefore, it is necessary to design special cooling equipment to meet property requirements for a building structural steel product with integral Z-direction property requirements.

SUMMARY OF THE INVENTION

[0010] In order to meet requirements of steel for prefabricated building structures, a cooling system is specially designed according to the above requirements. The present invention provides a hot-rolled H section steel with a yield strength up to 420 MPa, high toughness and excellent lamellar tearing resistance for building structures and a preparation method therefor. The shape steel product is applicable to the field of prefabricated building structure engineering, and the web and flange thereof both have high Z-direction properties, both exceeding a Z35 level. In order to realize excellent Z-direction properties at the flange and web, in combination with component design of the steel, a flange and web temperature homogeneity control device is designed and added in a rolling process, thereby realizing good impact toughness at a -20°C low temperature condition, having characteristics of excellent corrosion resistance, welding property, low yield-tensile ratio and the like, and meeting application requirements of the hot-rolled H-shape steel material in the steel building field of the prefabricated building structures in an ordinary area and a cold area and the like.

[0011] In order to achieve the above objectives, a technical solution used in the present invention has the following specific requirements.

[0012] The present invention provides a 420 MPa-level hot-rolled H section steel for buildings. The H section steel includes chemical components in percentages by weight (wt%): C: 0.06 to 0.10; Si: $\leq$ 0.25; Mn: 0.8 to 1.30; P $\leq$ 0.015; S $\leq$ 0.008; Cu: 0.15 to 0.25; Cr: 0.25 to 0.60; Ni: 0.10 to 0.19; V: 0.01 to 0.03; Al: 0.01 to 0.03; RE: 0.009 to 0.019; As + Sn + Zn + Pb + Ca + Mg: $\leq$ 0.035; and the balance being Fe and unavoidable impurities. Gases in steel in a smelting process are controlled: in percentages by weight, N $\leq$ 0.008, and T. [O] $\leq$ 0.002.

[0013] In order to reduce the yield-tensile ratio, only single microalloying design of VN alloy is used on the basis of low-carbon component design, a content is strictly controlled at the same time, an impact of precipitation strengthening on a yield strength is reduced, and finally the yield-tensile ratio of the H section steel is less than or equal to 0.8. In order to improve low temperature resistant toughness, an amount and dimension of inclusions are strictly controlled. On the basis of adding an RE element to modify the inclusions, a content of other residual elements is controlled: preferably, As + Sn + Zn + Pb + Ca + Mg $\leq$ 0.035.

[0014] Chemical elements added to the 420 MPa-level H section steel for buildings with excellent comprehensive lamellar tearing resistance (Z-direction properties) play the following roles.

[0015] C: according to requirements of the strength 420 MPa level, the design of low carbon composition can ensure that the building structural steel has certain low temperature resistance, and meanwhile, ensure that a certain pearlite microstructure is produced to improve the yield-tensile ratio, which is suitable for use of the building structural steel. After a corrosion resistant element is added, abnormal microstructures such as widmanstatten can be avoided due to a lower C content. For a beam blank, transverse and longitudinal web cracks are easy to control, and therefore, a content of C in the present invention is controlled to be 0.06 to 0.10% in consideration of microstructure properties and smelting cost.

[0016] Si: a proper amount of Si is beneficial to improving the strength; an overhigh Si content is easy to produce bainite and other microstructures; in order to avoid producing a large amount of Fe_2SiO_4 in a reheating process and affecting surface quality, an upper limit of the Si content is set to be less than 0.25%, preferably less than 0.25%, and more preferably

less than 0.20%.

[0017] Mn: Mn is an austenite stabilized element, which can significantly increase hardenability of steel and improve strength of the steel in a form of solid solution strengthening. However, segregation is easily produced when a Mn content is overhigh, and great difference exists at different positions. Microstructures of a heavy gauge building structural steel vary at different positions, and therefore, in order to ensure the strength, reduce the hardenability, and avoid occurrence of a large amount of abnormal microstructures, preferably, an upper limit of the Mn content is set to be 1.30%. Based on various factors, the Mn content in the H section steel is controlled to be within a range of 0.8 to 1.30%; and in order to obtain the 420 MPa level strength, a range of 1.0 to 1.20% is preferably selected according to an adding amount of VN alloy.

[0018] P: although a high P content is easy to improve corrosion resistance, an overhigh P content is easy to deteriorate low temperature resistance at a brittle grain boundary. The lower the P content is, the better the effect is, and the low temperature toughness is improved; and P is controlled to be less than 0.015%.

[0019] S: an overhigh S content is easy to produce many sulfides such as MnS, and produce a large amount of strip-shaped MnS inclusions at different positions of a complex-section shape steel, which reduces the low-temperature toughness, and meanwhile, is not beneficial to improving the corrosion resistance, and affects reduction of area, that is, affects the lamellar tearing resistance of the steel. Therefore, S is strictly controlled to be less than or equal to 0.008%.

[0020] Cu: Cu is a basic element to improve the corrosion resistance of steel, Cu can promote anodic passivation of the steel, thereby reducing a corrosion rate of the steel, and Cu serves as one of the common elements of a corrosion-resistant steel. Enrichment of Cu in a rust layer can greatly improve the protection property of the rust layer; and in order to achieve an enrichment effect of Cu in the rust layer, Cu is required to be more than 0.20%. However, an overhigh Cu content is not beneficial to weldability of the building structural steel, and it is also easy to produce copper brittleness. In a process of producing a shape steel with lamellar tearing resistance by adopting a beam blank continuous casting, cracks are easily produced at a corner of a leg due to enrichment of Cu, surface quality of a casting blank is seriously affected, and plasticity of the steel is caused to be poor. On the basis of meeting requirements of corrosion resistance of a prefabricated building structural steel, the Cu content in the present invention is controlled to be 0.15 to 0.25%.

[0021] Ni: Ni improves strength of steel by solid solution strengthening, and is also an effective element to improve low temperature toughness. Meanwhile, Ni can improve high temperature plasticity of the steel in a continuous casting process and reduce surface defects of the casting blank. Ni, on one hand, can enlarge an austenite region and improve hardenability, and on the other hand, can refine a pearlite lamella and pearlite, and play a role in fine grain strengthening. In combination with a Cu content control proportion, the Ni content of the steel is controlled within a range of 0.10 to 0.19%.

[0022] Cr: Cr is an element that improves hardenability, increases tempering stability, contributes to improvement of strength of steel, and meanwhile, contributes to improvement of corrosion resistance of the steel. The corrosion resistance of the steel can be significantly improved when Cr is used in match with Cu and Ni. In a case of a low C content, adding of a proper amount of Cr can improve hardness and strength of the steel, and also improve the corrosion resistance of the shape steel. Excessive adding will reduce toughness, weldability, and flame cutting properties of the material. In an aspect of microstructure control, excessive Cr affects microstructure transformation of the steel and produces abnormal microstructures such as bainite and the like. Considering strength and corrosion resistance improvement, the Cr content in the present invention is controlled to be 0.25 to 0.60%.

[0023] V: V is one of the most commonly used and most effective strengthening elements for a microalloyed steel. V is used to affect the microstructure and properties of the steel by formation of VN, V (CN), V is mainly precipitated in ferrite at an austenite grain boundary to refine a ferrite grain, thereby improving the strength and low temperature toughness of the material. Considering that precipitation strengthening has a great impact on the yield strength and meanwhile, in order to improve the strength, V is added between 0.01% and 0.03%.

[0024] RE: RE purifies steel, inclusions are modified, and pitting and intergranular corrosion are reduced. Solid solution RE in steel increases polarization resistance and self-corrosion potential of a steel matrix, which is beneficial to improving corrosion resistance of the steel matrix, changing the microstructure of the rust layer, forming a compact rust layer with good adhesion and corrosion resistance, and improving the corrosion resistance of a high-strength weather-resistant steel. Considering that RE needs to be properly added to modify inclusions such as MnS and the like, a selection range of RE is between 0.009% and 0.019%, the RE element is a compositely added element, and considering factors such as economy, cost property and the like, lanthanide and ceride are mainly used in the present application to spheroidize the inclusions.

[0025] Al: Al serves as a strong deoxidizing element added during preparation of a low temperature steel. In order to ensure that an O content in the steel is as low as possible, the content of the inclusions is reduced, and excessive Al after deoxidation can also form AlN precipitates with N in the steel, an austenite grain in heating and hot rolling processes is refined. Therefore, as a deoxidizing element and a fine grain strengthening element, the Al content is controlled within a range of 0.01 to 0.03%.

[0026] As, Sn, Zn, Pb, Ca, Mg: as residual elements in steel, they have a great impact on low temperature impact toughness and surface quality. Therefore, as elements that cannot be completely removed in the steel, their contents should be reduced as much as possible. Combined with production practice, equipment capacity and cost control, a total

amount of the residual elements is controlled: As + Sn + Zn + Pb + Ca + Mg ≤ 0.035%.

[0027] N: an overhigh N content is easy to induce quality defects of the casting blank; and meanwhile, in order to ensure VN alloying effects, the N content in the present invention is required to be less than 0.008%.

[0028] O: in order to avoid formation of large particle oxide inclusions, which deteriorate toughness and plasticity of the steel, a total oxygen content of T. [O] in the present invention is required to be less than or equal to 0.0020%.

[0029] The H section steel product of the present invention has excellent comprehensive mechanical properties, with a yield strength ≥ 420 MPa, a tensile strength ≥ 520 MPa, an elongation rate ≥ 19%, and longitudinal impact energy ≥ 50 J at -20°C, thereby being applicable to building structures in areas with low temperature conditions. Web and flange Z-direction properties are excellent, and reduction of area is all more than or equal to 60%.

[0030] A preparation method for the above hot-rolled H section steel with excellent lamellar tearing resistance, which is applicable to building structures in different areas, mainly includes following steps: molten iron pretreatment, converter smelting, LF refining, RH refining, steel blank surface defect cleaning, beam continuous casting blank casting, steel blank walking beam furnace reheating, high-pressure water descaling, temperature controlled rolling + controlled cooling, low-temperature straightening, sawing to length, and collecting and piling.

[0031] Molten iron and scrap steel are subjected to smelting, refining and continuous casting processes in a converter + refining furnace (LF + RH equipment) to obtain a beam blank continuous casting, a surface is subjected to defect testing and cleaning, and then a rolling forming procedure is carried out. The steel blank firstly enters a walking beam furnace for reheating to obtain an austenite microstructure with a proper dimension, and then is rolled into a material after rough rolling and finish rolling, and controlled rolling and cooling are carried out in the rolling process. It is to be noted that precise temperature control is carried out at a last pass of finish rolling, and temperatures of upper and lower legs of the H section steel and upper and lower sides of a flange are basically consistent by development of a special cooling device (see FIG. 2 for the cooling device), which ensures consistency of the flange and web Z-direction properties under a condition of microstructure homogeneity, and ensures the structural stability and safety when the prefabricated building structure adopts the product.

[0032] In the rolling process, main processes of controlled rolling and cooling are as follows: heating temperature is controlled to be 1250 to 1300°C, last pass temperature of rough rolling is 1150 to 1050°C according to a different dimension, a cumulative deformation rate is 40 to 60%, and the rest is completed in a finish rolling stage. After rough rolling, three-stand finish rolling is carried out, and last rolling temperature of finish rolling is precisely controlled to be 800°C to 850°C, such that an austenite microstructure is completely converted into pearlite and ferrite, and fine grain-controlled rolling is realized. As a temperature difference of 30 to 50°C exists both between upper and lower leg flanges of the H section steel and between upper and lower sides of a web, controlled cooling is carried out after discharging from a rolling mill in the last pass of finish rolling, the designed cooling equipment is used for carrying out precise controlled cooling on the lower leg and the web by spraying water through a nozzle, and corresponding water flow control is carried out according to the detected temperature difference. After cooling, a temperature difference at the same positions of the upper and lower leg flanges drops to within 10°C, a temperature difference of the upper and lower surfaces of the web drops to within 5°C, such that integral Z-direction properties of the upper and lower leg flanges and the web of the H section steel is basically consistent. After finish rolling, a rolled piece passes through a conveying roller table, and a cooling rate is controlled by a heat preservation cover according to ambient temperature, so as to avoid large fluctuation of the ambient temperature in different seasons to affect the final properties. The product, after being discharged from a finish rolling mill, is naturally cooled on a cooling bed, and after temperature drops to be less than 100°C, the product enters a straightening machine to be straightened. The flange with a finished rolled piece specification has a thickness range of 15 to 50 mm. Samples are taken from a flange position and a middle position of the web of the H section steel to test mechanical properties. Deviation of Z-direction tensile reduction of area of the flange and web of the H section steel produced by the above process is controlled to be less than 5%.

[0033] As a preference, the 420 MPa-level hot-rolled H section steel for prefabricated buildings with excellent lamellar tearing resistance and the preparation method and specific process control provided by the present invention specifically include the following aspects.

1. Smelting procedure

1) Converter smelting

[0034] The converter is controlled according to basic operation, and the main procedure includes: strictly controlling contents of residual elements such as S, As and the like in blast furnace molten iron, and carrying out quality preferred treatment on the molten iron, wherein the contents of As and Sn are both less than 0.008%, controlling basicity of converter final slag to be within a range of 2.1 to 3.9, adopting slag-blocking tapping, and adopting Al-Mn-Fe deoxidation alloying in a tapping process. A deoxidizer, ferrosilicon, Mn, VN alloy, NbFe alloy, a Ni plate and that like are added in batches in the tapping process, and finally components of the converter meet requirements of an internal control target.

2) Refining LF + RH duplex control

[0035] The refining process adopts LF + RH for duplex control on gases and inclusions. LF adopts CaC2, Ba-Ca-Si and Al particles for slag adjustment, and top slag shall be white slag or yellow and white slag before discharging. Oxygen determination shall be controlled at [O] ≤ 20 ppm after entering and primary sampling; RE is added before Ca wire feeding, bottom nitrogen blowing is carried out in the whole process according to process requirements, soft blowing time is not less than 20 min, the refining cycle is not less than 30 min, temperature of molten steel at the end time of LF refining is controlled to be 1600 to 1620°C, the temperature of molten steel is increased to offset temperature drop of the molten steel at the time of RH treatment, and it is strictly prohibited to use a method of "adding Al to generate chemical heat for temperature rise" at the time of RH treatment.

[0036] This treatment mode is used for RH refining, circulation time is more than 15 min, and pure degassing time is more than 5 min. After the treatment, each furnace is fed with a 200-250 m calcium aluminum line, the soft blowing time is not less than 10 min, and the RH smelting cycle is controlled to be 40 to 50 min.

[0037] Whole-process protective casting is that a long nozzle is used from a ladle to a tundish and Ar seal protection is carried out; the tundish adopts a covering flux combined with a carbonizing rice hull to cover; a submerged entry nozzle is used from the tundish to a mold and Ar seal protection is used; a mold level adopts peritectic steel flux; and preferably, in percentages by weight, the peritectic steel flux includes components: 25% ≤ SiO ≤ 35%, 35% ≤ CaO ≤ 45%, 1.90% ≤ MgO ≤ 3.00%, and 3.00% ≤ Al2O3≤4.00%.

3) Continuous casting

[0038] The continuous casting process adopts whole protective casting, a ladle long nozzle is used, and sealing ring control is added; the tundish adopts a stopper ladle to cast molten steel; in order to improve efficiency, a drawing speed of a beam blank continuous casting is 1.0 to 1.2 m/min; and a degree of superheat is controlled to be 20 to 30°C to prevent blocking of the nozzle; the smelted molten steel is cast into three dimensions of the near-net shape section beam blank, and the beam blank is slowly cooled in a heat preservation pit or a sand pit or by using a heat preservation felt after being cast and formed in order to avoid surface cracks due to a large amount of alloy.

2. Rolling procedure

1) Heating

[0039] The blank is subjected to austenitizing homogeneous heating in a heating furnace, temperature in heating and soaking stages is controlled to be 1250 to 1300°C, heating time is 90 to 120 min, and then the blank is discharged from the furnace and rolled. The heating adopts high-temperature short-time heating to control austenite homogenization and refinement.

2) Controlled rolling and controlled cooling

[0040] A controlled rolling/controlled cooling process is used in a large production line. In a rough rolling procedure, shape-based groove rolling is realized, and the number of rolling passes is less than 9; and in a finish rolling process, property-controlled rolling is carried out, and the number of rolling passes is less than 7. Last rolling temperature of finish rolling is controlled to be 800 to 850°C A cooling track of the cooling bed is kept at a temperature more than 400°C, and products are subjected to centralized and slow cooling on the cooling bed, thereby preventing final properties from being affected by a too fast cooling rate. In a case that temperature of the product drops to 200 to 300°C, the product enters a straightening machine to be straightened, thereby ensuring integrity of a primary scale on the surface.

[0041] The present invention provides a cooling device for improving comprehensive properties. A specially-designed cooling device is used in the rolling process to carry out comprehensive cooling on a web and a flange, and the cooling device is installed behind the finish rolling mill. The cooling device includes a plurality of cooling liquid pipelines 1 distributed at intervals and a plurality of cold air pipelines 2 distributed at intervals. The cooling liquid pipeline 1, configured to cool a flange, is arranged below a lower flange 6 of the hot-rolled H section steel, and includes a first flange pipeline 4 parallel to the web and two groups of second flange pipelines vertical to and communicated with the first flange pipeline 4, and each group of second flange pipelines respectively corresponds to one flange. Each group of second flange pipelines includes two parallel lower flange pipelines 5, a surface, opposite to the lower flange 6, of the lower flange pipeline 5 is provided with a plurality of nozzles 3 for cooling the flange, and the lower flanges 6 of the H section steel are all arranged between the two parallel lower flange pipelines 5. The cold air pipeline 2 is configured to cool the web, is convex, and is arranged between the lower flange 6 and the web 8, and a plurality of nozzles 3 are arranged on a cold air pipeline parallel to and close to the web for cooling the web 8. A shape of the cold air pipeline matches that formed by the lower flange and the

web. The cooling rate can be controlled according to the web and flange thicknesses (see FIG. 1). The cooling device is installed behind the finish rolling mill, and is switched on at the last pass of rolling, and the flange and the web are separately cooled by the installation mode. In FIG. 1, the cooling liquid pipeline numbered 1 is used for cooling the flange; due to the large thickness of the flange, cooling water or other cooling media shall be used for cooling according to the cooling rate. The flow rate of the cooling liquid is adjusted by the nozzle 3 after a temperature difference is measured by an online temperature measuring device for the upper flange 7 and the lower flange 6. As the web is thinner than the flange, use of cooling air is sufficient to meet requirements. The cold air pipeline numbered 2 is used for cooling the web; due to a small temperature difference between upper and lower positions of the web, the flow rate of the cooling air of the nozzle 3 is properly adjusted as required to achieve cooling. By the above device, a temperature difference of the upper and lower leg flanges is within a range of 5 to 10°C, and a temperature difference of the web is within a range of 3 to 6°C. Therefore, microstructure homogeneity is ensured, and the web and flange Z-direction properties of the building structural steel are improved. By matching with the V microalloying design, the above equipment can meet the property requirements of the final hot-rolled H section steel and simultaneously ensure that the web and flange Z-direction properties all reach a higher level.

3) Finishing procedure

[0042] After the product is off the production line, surface and dimension finishing treatment shall be carried out; in order to ensure that the material properties are true and accurate, a test sample shall be taken in the finishing process to analyze the product properties.

[0043] Compared with the prior art, the present invention has the beneficial effects that:
(1) low carbon + trace VN alloying + RE composition design, compared with other alloying, are simple and efficient, and an occurrence rate of casting blank defects is reduced; (2) control on low residual elements and impurity elements in molten steel is beneficial to improving plasticity and low temperature toughness of steel; (3) a certain amount of RE elements is added, and the inclusions in the steel are fine, which are beneficial to improving the lamellar tearing resistance of the flange and the web; (4) a beam blank single-side casting control technology is used to realize an Al deoxidization process, purity of molten steel is improved, and meanwhile, a blockage problem in the casting process of a long nozzle is avoided; (5) a homogeneous cooling process of the web and the flange is realized by a specially-designed special water spraying device, integral microstructure homogeneity of the web and the flange is improved, the lamellar tearing resistance is synchronously controlled and improved, and the comprehensive toughness of the H section steel is integrally improved; and (6) by the above process, the yield strength of the prepared H section steel reaches the level of more than 420 MPa, weight reduction of the building structural steel is realized, and meanwhile, the H section steel has good corrosion resistance, Z-direction properties, low temperature resistant toughness and other comprehensive properties, thereby completely meeting engineering requirements of the existing prefabricated building structural steel.

BRIEF DESCRIPTION OF THE DRAWINGS

[0044]

FIG. 1 (a) is a plane structural view of cooling setting for H section steel production according to the present invention;
FIG. 1 (b) is a three-dimensional structural view of cooling setting for H section steel production according to the present invention;
FIG. 2 (a) is a microstructure view of an upper leg of the H section steel obtained in Example 1 according to the present invention;
FIG. 2 (b) is a microstructure view of a lower leg of the H section steel obtained in Example 1 according to the present invention;
FIG. 2 (c) is a microstructure view of a flange of the H section steel obtained in Example 1 according to the present invention;
FIG. 3 (a) is a microstructure view of an upper leg of the H section steel obtained in Example 6 according to the present invention;
FIG. 3 (b) is a microstructure view of a lower leg of the H section steel obtained in Example 6 according to the present invention;
FIG. 3 (c) is a microstructure view of a flange of the H section steel obtained in Example 6 according to the present invention;

[0045] Reference numerals in the drawings:
1. Cooling liquid pipeline 2. Cold air pipeline 3. Nozzle 4. First flange pipeline 5. Lower flange pipeline 6. Lower flange 7. Upper flange 8. Web

DETAILED DESCRIPTION

[0046] The present invention will be further described below with reference to specific examples.

[0047] The present invention is described in detail as follows:

Table 1 is a list of chemical components of the examples and comparative examples of the present invention;
Table 2 is a list of main process parameters of the examples and comparative examples of the present invention; and
Table 3 is a list of property testing of the examples and comparative examples of the present invention.

[0048] Each example of the present invention carries out production according to the following steps.

1) Molten iron with low P, low S and low residual elements is preferred to enter a converter, is smelted therein and then enters LF + RH for duplex control on components and inclusions; temperature of the molten steel at the end time of LF refining is controlled to be 1600 to 1620°C, the temperature of the molten steel is increased to offset temperature drop of the molten steel at the time of RH treatment, and it is strictly prohibited to use a method of "adding Al to generate chemical heat for temperature rise" at the time of RH treatment; this treatment mode is used for RH refining, circulation time is more than 15 min, and pure degassing time is more than 5 min. After the treatment, each furnace is fed with a 200-250 m Ca-Al wire, the soft blowing time is not less than 10 min, and the RH smelting cycle is controlled to be 40 to 50 min.

[0049] Finally, continuous casting is carried out to form beam blanks, and three blank types are divided according to different flange thicknesses. The residual elements of the molten iron are strictly controlled: As + Sn + Zn + Pb + Ca + Mg $\leq$ 0.035, casting superheat is controlled to be less than 20°C in the casting process, one numerical value is randomly selected from a drawing speed of 1.0 to 1.18 m/min as a constant drawing speed, and straightening temperature is not less than 850°C.

2) In a rolling procedure, a blank is reheated in a heating furnace, temperature of reheating is controlled to be 1250 to 1300°C, heating time is 90 to 120 min, and the blank is discharged from the furnace and rolled. A controlled rolling/controlled cooling process is used. The number of rolling passes in a BD rough rolling procedure is less than 9; and the number of rolling passes in a finish rolling TM process is less than 7. Last rolling temperature of finish rolling is controlled to be 800 to 850°C A cooling track of the cooling bed is kept at a temperature more than 400°C, and products are subjected to centralized and slow cooling on the cooling bed for more than 15 min. In a case that temperature of the product drops to 200 to 300°C, the product enters a straightening machine to be straightened.

3) In a finishing procedure, after the product is off the production line, surface and dimension finishing treatment are carried out; and a test sample is taken in the finishing process to analyze the product properties.

Table 1 Chemical Components of Examples and Comparative Examples of the Present Invention (wt. %)

Elements	C	Si	Mn	P	S	Cu	Cr	Ni	RE	V	Al	Nb	Ti	B
Example 1	0.06	0.25	1.25	0.013	0.005	0.18	0.26	0.18	0.012	0.02	0.015	-	-	-
Example 2	0.07	0.24	1.28	0.015	0.007	0.20	0.36	0.17	0.019	0.03	0.022	-	-	-
Example 3	0.09	0.25	1.30	0.012	0.006	0.22	0.32	0.16	0.016	0.025	0.019	-	-	-
Example 4	0.08	0.20	1.22	0.013	0.008	0.25	0.29	0.17	0.009	0.022	0.025	-	-	-
Example 5	0.06	0.23	1.29	0.014	0.005	0.21	0.27	0.19	0.015	0.013	0.017	-	-	-
Example 6	0.10	0.21	1.19	0.015	0.008	0.19	0.33	0.17	0.019	0.026	0.025	-	-	-
Comparativ e example 1 CN113564 480A	0.1	0.22	1.25	0.016	0.0018	-	-	-	-	-	0.008	0.045	0.015	0.0008
Comparativ e example 2 CN102418 037B	0.16	0.25	1.40	0.019	0.007	-	-	-	-	0.013	-	-	-	-
Comparativ e example 3 CN102418 037B	0.15	0.34	1.41	0.015	0.007	-	-	-	-	-	-	0.032	0.011	-

[0050] See Table 2 for main process parameters of refining.

Table 2 Main Process Parameters of Refining

Examples	LF Refining Discharging Temperature, °C	RH Refining Circulation Time, min	RH Refining Pure Degassing Time, min	Ca-Al Wire (m)	RH Refining Soft Blowing Time, min	RH Refining Smelting Cycle, min
Example 1	1610	18	7	220	12	45
Example 2	1615	17	8	230	12	47
Example 3	1613	16	8	225	12	42
Example 4	1617	17	8	215	11	45
Example 5	1604	16	8	220	12	47
Example 6	1620	18	10	224	11	50

[0051] See Table 3 for specific process parameters of a continuous casting process.

Table 3 Process Parameters of Continuous Casting Process

Examples	Liquidus Temperatur e /°C	Steel Feeding temperat ure /°C	Tundish Temperature /°C			Drawing Speed /m·min^{-1}			Superheat Degree /°C
Example 1	1519	1566	1532	1533	1526	0.76	0.78	0.77	20
Example 2	1521	1567	1535	1539	1531	0.75	0.71	0.71	23
Example 3	1531	1570	1541	1537	1542	0.82	0.88	0.82	21
Example 4	1526	1562	1542	1533	1537	0.79	0.78	0.78	22
Example 4	1523	1564	1545	1538	1531	0.77	0.73	0.70	20
Example 6	1529	1571	1540	1539	1542	0.85	0.86	0.82	23

[0052] Table 3 is a list of main process parameters of the examples and comparative examples of the present invention.

Table 4 Main Process Parameters

Examples	Flange Thickness /mm	Heating Temperature, °C	BD Outlet Temperature, °C	Refining Outlet Temperature, °C	Temperature Difference of Outer Sides of Upper and Lower Flanges after Cooling, °C	Temperature Difference of Upper and Lower Surfaces of Web, °C	Rolling Passes BD + TM
Example 1	26	1250	1050	820	7	5	16
Example 2	28	1265	1060	830	8	6	16
Example 3	32	1280	1080	825	7	7	16
Example 4	41	1270	1090	840	9	9	14
Example 5	36	1255	1070	835	8	6	14
Example 6	50	1280	1100	850	10	9	12

[0053] Table 5 is a list of property testing of the examples and comparative examples of the present invention.

Table 5 Record of Mechanical Properties of Rolled Piece

Component Elements	Flange Thickness /mm	Testing Position	Yield Strength /MPa	Tensile Strength /MPa	Elongation Rate (%)	Longitudinal Average Impact Energy at -20°C /J	Z-direction Reduction of Area, %
Example 1	26	Upper Flange	445	563	31	205	81
		Lower Flange	451	601	28	221	76
		Web	501	642	27	150	75
Example 2	28	Upper Flange	456	616	32	211	75
		Lower Flange	448	567	30	199	79
		Web	498	655	26	166	71
Example 3	32	Upper Flange	439	556	31	203	78
		Lower Flange	446	595	32	186	79
		Web	491	638	28	176	73
Example 4	41	Upper Flange	436	606	29	188	79
		Lower Flange	441	621	30	178	72
		Web	489	652	26	135	68
Example 5	36	Upper Flange	431	590	30	168	75
		Lower Flange	439	570	29	189	75
		Web	491	682	25	163	69
Example 6	50	Upper Flange	432	576	28	166	78
		Lower Flange	438	608	30	156	75
		Web	479	630	24	121	67
Comparative example 1 CN113564480A	50	Flange	427	537	-	-	77
Comparative example 2 CN102418037B	14	Flange	360	545	-	-	40.81
Comparative example 3 CN102418037B	13	Flange	420	-	-	-	39

[0054] A trial-produce product is sampled for property testing, a sampling location of a sample for mechanical properties is at 1/3 of a flange of a H section steel from an edge part to a center part, a web is sampled in a middle, with a reference

standard being BS EN ISO 377-1997 *Location and Preparation of Samples and Test Pieces for Mechanical Testing;* testing methods for a yield strength, a tensile strength and an elongation rate shall be in accordance with ISO 6892-1-2009 *Metallic Materials-Tensile Testing at Room Temperature;* and an impact energy testing method shall be in accordance with ISO 148-1 *Metallic Materials-Charpy Pendulum Impact,* and the results are shown in Table 5. By comparison, it is found that the Z-direction properties of the flange and web of the H section steel produced by the preparation method of the present invention are superior to those of the existing patented products.

[0055] Anything not described in detail in the present invention may be used from conventional technical knowledge in the field.

[0056] Finally, it should be noted that the above examples are used only to illustrate the technical solutions of the present invention and are not intended to be limiting. Although the present invention has been described in detail with reference to the examples, it should be understood by those skilled in the art that modifications or equivalent substitutions may be made to the technical solution of the present invention without departing from the spirit and scope of the technical solution of the present invention, which should be included in the scope of the claims of the present invention.

Claims

1. A high-toughness hot-rolled H section steel for buildings, wherein the hot-rolled H section steel comprises chemical components in percentages by weight: C: 0.06 to 0.10%; Si: ≤ 0.25%; Mn: 0.8 to 1.30%; P ≤ 0.015%; S ≤ 0.008%; Cu: 0.15 to 0.25%; Cr: 0.25 to 0.60%; Ni: 0.10 to 0.19%; V: 0.01 to 0.03%; Al: 0.01 to 0.03%; RE: 0.009 to 0.019%; As + Sn + Zn + Pb + Ca + Mg: ≤ 0.035%; N: ≤0.008%; T. [0]: ≤ 0.002%, and the balance being Fe and unavoidable impurities.

2. The hot-rolled H section steel of claim 1, wherein the hot-rolled H section steel has a yield-tensile ratio of ≤ 0.8, a yield strength of ≥ 420 MPa, a tensile strength of ≥ 520 MPa, an elongation rate of ≥ 19%, a longitudinal impact energy of ≥ 50 J at -20°C, and a reduction of area of all ≥ 60%.

3. A preparation method for a high-toughness hot-rolled H section steel for buildings, comprising:

    1) a smelting procedure, sequentially comprising:

        converter smelting;
        LF + RH refining: controlling temperature of molten steel at an end time of LF refining to be 1600-1620°C, enabling circulation time of RH refining to be more than 15 min, and controlling a smelting cycle to be 40 to 50 min; and
        continuous casting;

    2) a rolling procedure, sequentially comprising:

        heating: controlling temperature in heating and soaking stages to be 1250 to 1300°C, enabling heating time to be 90 to 120 min, and then discharging and rolling;
        controlled rolling and controlled cooling: controlling finishing rolling temperature of finish rolling to be 800 to 850°C, carrying out centralized and slow cooling by a cooling bed, and straightening;
        wherein, a cooling device is used to separately cool a web and a flange in a rolling process, which is switched on at a last pass of rolling; and

    3) a finishing procedure.

4. The preparation method of claim 3, wherein, in the converter smelting of step 1), contents of As and Sn are both less than 0.008%, basicity of converter final slag is within a range of 2.1 to 3.9, slag-blocking tapping is used, and Al-Mn-Fe deoxidation alloying is used in a tapping process.

5. The preparation method of claim 3, wherein, in LF refining of step 1), RE is added before Ca wire feeding, soft blowing time is not less than 20 min, and a refining cycle is not less than 30 min;

    pure degassing time of RH refining is more than 5 min, after treatment, each furnace is fed with a 200-250 m Ca-Al wire, and soft blowing time is not less than 10 min; and
    whole-process protective casting is carried out, a tundish adopts a covering flux combined with a carbonizing rice hull to cover; a submerged entry nozzle is used from the tundish to a mold and argon sealing protection is used; a

mold level adopts peritectic steel flux, wherein, in percentages by weight, the peritectic steel flux comprises components: 25% ≤ SiO ≤ 35%, 35% ≤ CaO ≤ 45%, 1.90% ≤ MgO ≤ 3.00%, and 3.00% ≤ Al203 ≤ 4.00%.

6. The preparation method of claim 3, wherein in the continuous casting process in step 1), a whole protective casting process is used; a tundish adopts a stopper ladle to cast molten steel; a drawing speed of a beam blank continuous casting is 1.0 to 1.2 m/min; and a degree of superheat is controlled to be 20 to 30°C.

7. The preparation method of claim 3, wherein, the step 2) further comprises a rough rolling procedure, shape-based groove rolling is thus realized, last pass temperature of the rough rolling is 1150 to 1050°C, a cumulative deformation rate is 40% to 60%, and the number of rolling passes is less than 9; and
in a finish rolling procedure, property controlled rolling is carried out in the finish rolling process, and the number of rolling passes is less than 7; a cooling track of a cooling bed is kept at a temperature more than 400°C, and products are subjected to centralized and slow cooling on the cooling bed; and in a case that temperature of the product drops to 200-300°C, the product enters a straightening machine to be straightened.

8. The preparation method of claim 3, wherein after cooling, a temperature difference at the same positions of upper and lower flanges drops to within 10°C, a temperature difference of upper and lower surfaces of a web drops to within 5°C, and deviation of Z-direction tensile reduction of area of the H section steel flange and web is controlled to be less than 5%.

9. A cooling device for improving comprehensive properties, configured to perform cooling of claim 3, wherein the cooling device is installed behind a finish rolling mill, and the cooling device comprises a plurality of cooling liquid pipelines distributed at intervals and a plurality of cold air pipelines distributed at intervals;

the cooling liquid pipeline, configured to cool a flange, is arranged below a lower flange of the hot-rolled H section steel, and comprises a first flange pipeline parallel to the web and two groups of second flange pipelines vertical to and communicated with the first flange pipeline, and each group of second flange pipelines respectively corresponds to one flange;
wherein, each group of second flange pipelines comprises two parallel lower flange pipelines, a surface, opposite to the lower flange, of the lower flange pipeline is provided with a plurality of nozzles for cooling the flange, and the lower flanges of the H section steel are all arranged between the two parallel lower flange pipelines;
the cold air pipeline is configured to cool the web, is convex, and is arranged between the lower flange and the web, and a plurality of nozzles are arranged on a cold air pipeline parallel to and close to the web for cooling the web.

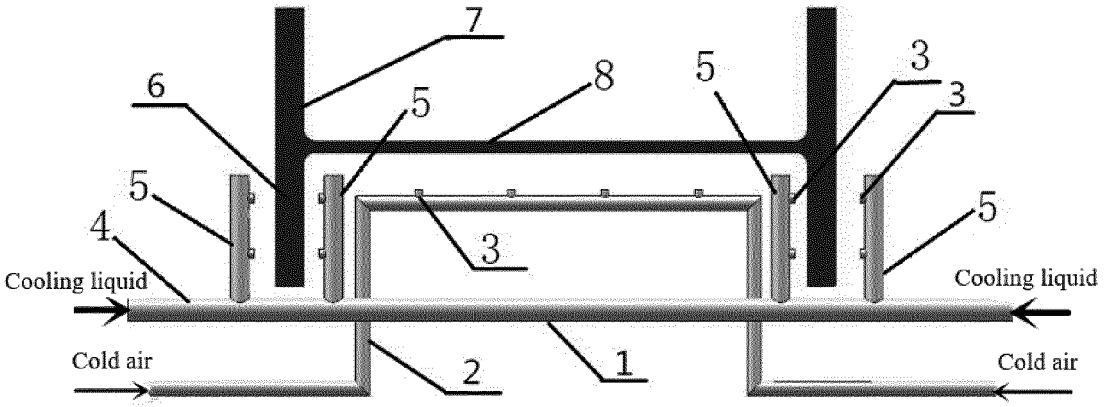

FIG. 1 (a)

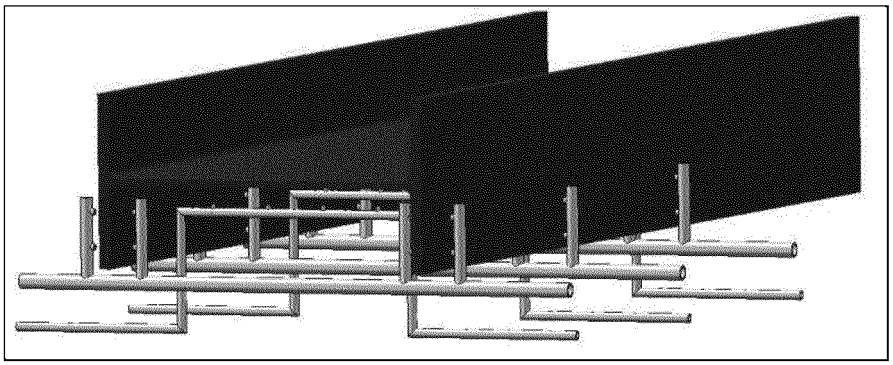

FIG. 1 (b)

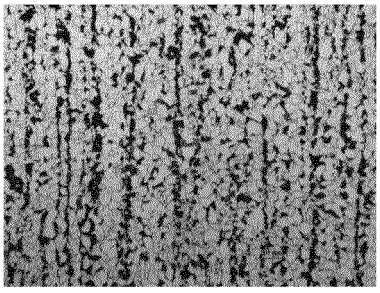

FIG. 2 (a)

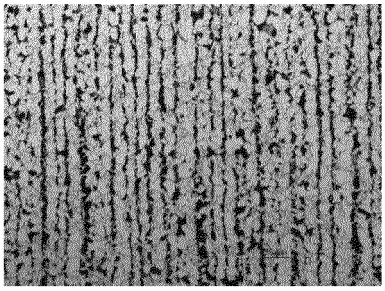

FIG. 2 (b)

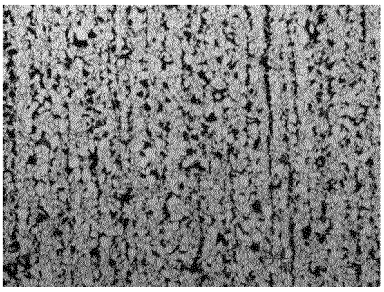

FIG. 2 (c)



FIG. 3 (a)

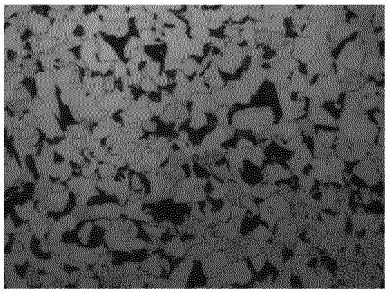

FIG. 3 (b)

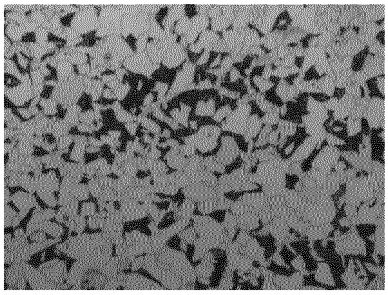

FIG. 3 (c)

INTERNATIONAL SEARCH REPORT

International application No.
PCT/CN2022/133957

A. CLASSIFICATION OF SUBJECT MATTER

C22C 38/02(2006.01)i;C22C 38/04(2006.01)i;C22C 38/42(2006.01)i;C22C 38/46(2006.01)i;C22C 38/06(2006.01)i;C21D 8/00(2006.01)i;B22D 11/111(2006.01)i;C21C 5/36(2006.01)i;C22C 33/06(2006.01)i;C21C 7/00(2006.01)i;C21C 7/10(2006.01)i;C21C 7/06(2006.01)i;B21B 1/46(2006.01)i;B21B 45/00(2006.01)i;B21B 45/02(2006.01)i

According to International Patent Classification (IPC) or to both national classification and IPC

B. FIELDS SEARCHED

Minimum documentation searched (classification system followed by classification symbols)

IPC: C22C38,C22C33,C21D,B22D,C21C,B21B

Documentation searched other than minimum documentation to the extent that such documents are included in the fields searched

Electronic data base consulted during the international search (name of data base and, where practicable, search terms used)

CNTXT, ENTXTC, DWPI, CNKI: H型, 工字, 腹板, 翼缘, 气, 热轧, 铬, 铜, 镍, 钒, 稀土, flange+, web+, air, hot roll+, Cr, Cu, Ni, V, RE, REM

C. DOCUMENTS CONSIDERED TO BE RELEVANT

Category*	Citation of document, with indication, where appropriate, of the relevant passages	Relevant to claim No.
Y	CN 105018861 A (SHANDONG IRON AND STEEL CO., LTD.) 04 November 2015 (2015-11-04) description, paragraphs 9-23 and 42	1-9
Y	CN 101497969 A (WUHAN IRON & STEEL (GROUP) CORP.) 05 August 2009 (2009-08-05) description, page 1, paragraph 5, and page 4, paragraph 3	1-2
Y	JP 2018103248 A (NIPPON STEEL & SUMITOMO METAL CORP.) 05 July 2018 (2018-07-05) description, paragraphs 19 and 23-24, and figures 2 and 3	3-9
A	JP 2016141834 A (NIPPON STEEL & SUMITOMO METAL CORP.) 08 August 2016 (2016-08-08) entire document	1-9
A	CN 108642381 A (SHANDONG IRON AND STEEL CO., LTD.) 12 October 2018 (2018-10-12) entire document	1-9

☑ Further documents are listed in the continuation of Box C. ☑ See patent family annex.

* Special categories of cited documents:
"A" document defining the general state of the art which is not considered to be of particular relevance
"D" document cited by the applicant in the international application
"E" earlier application or patent but published on or after the international filing date
"L" document which may throw doubts on priority claim(s) or which is cited to establish the publication date of another citation or other special reason (as specified)
"O" document referring to an oral disclosure, use, exhibition or other means
"P" document published prior to the international filing date but later than the priority date claimed
"T" later document published after the international filing date or priority date and not in conflict with the application but cited to understand the principle or theory underlying the invention
"X" document of particular relevance; the claimed invention cannot be considered novel or cannot be considered to involve an inventive step when the document is taken alone
"Y" document of particular relevance; the claimed invention cannot be considered to involve an inventive step when the document is combined with one or more other such documents, such combination being obvious to a person skilled in the art
"&" document member of the same patent family

Date of the actual completion of the international search	Date of mailing of the international search report
07 April 2023	**11 April 2023**
Name and mailing address of the ISA/CN **China National Intellectual Property Administration (ISA/CN)** **China No. 6, Xitucheng Road, Jimenqiao, Haidian District, Beijing 100088** Facsimile No. **(86-10)62019451**	Authorized officer Telephone No.

Form PCT/ISA/210 (second sheet) (July 2022)

INTERNATIONAL SEARCH REPORT

International application No.
PCT/CN2022/133957

C. DOCUMENTS CONSIDERED TO BE RELEVANT

Category*	Citation of document, with indication, where appropriate, of the relevant passages	Relevant to claim No.
A	CN 108286008 A (NORTHEASTERN UNIVERSITY) 17 July 2018 (2018-07-17) entire document	1-9
A	CN 102773271 A (LAIWU IRON & STEEL GROUP CO., LTD.) 14 November 2012 (2012-11-14) entire document	1-9

Form PCT/ISA/210 (second sheet) (July 2022)

INTERNATIONAL SEARCH REPORT
Information on patent family members

International application No.
PCT/CN2022/133957

Patent document cited in search report	Publication date (day/month/year)	Patent family member(s)	Publication date (day/month/year)
CN 105018861 A	04 November 2015	None	
CN 101497969 A	05 August 2009	None	
JP 2018103248 A	05 July 2018	JP 6816504 B2	20 January 2021
JP 2016141834 A	08 August 2016	JP 6409598 B2	24 October 2018
CN 108642381 A	12 October 2018	KR 20200143466 A	23 December 2020
		WO 2019218657 A1	21 November 2019
		JP 2021523304 A	02 September 2021
		JP 7098828 B2	11 July 2022
		EP 3789508 A1	10 March 2021
		EP 3789508 A4	09 February 2022
CN 108286008 A	17 July 2018	None	
CN 102773271 A	14 November 2012	None	

Form PCT/ISA/210 (patent family annex) (July 2022)

REFERENCES CITED IN THE DESCRIPTION

This list of references cited by the applicant is for the reader's convenience only. It does not form part of the European patent document. Even though great care has been taken in compiling the references, errors or omissions cannot be excluded and the EPO disclaims all liability in this regard.

Patent documents cited in the description

- CN 202210851313 **[0001]**
- CN 113564480 A **[0005] [0049] [0053]**
- CN 103334051 B **[0006]**
- CN 102418037 B **[0007] [0053]**