(No Model.) 2 Sheets—Sheet 1.

W. H. MILLER.

NOZZLE FOR STREET SPRINKLERS.

No. 456,767. Patented July 28, 1891.

Fig. 1.

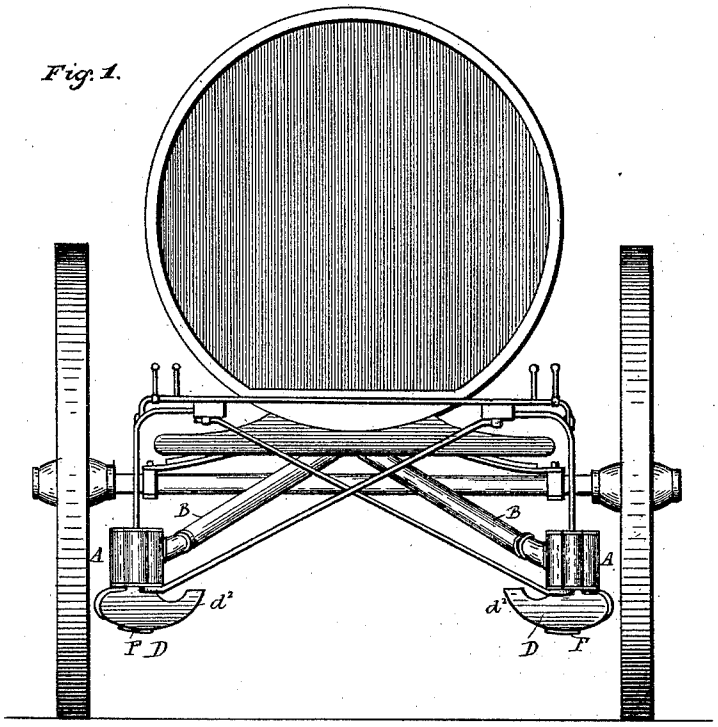

Fig. 2.

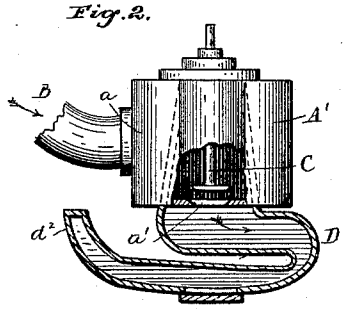

Fig. 3.

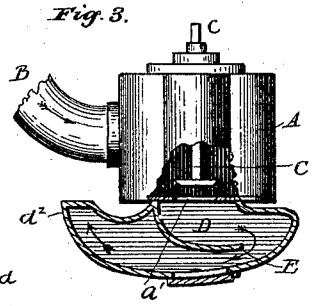

Fig. 5.

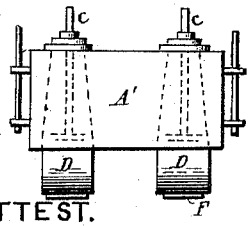

Fig. 4.

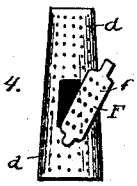

Fig. 6.

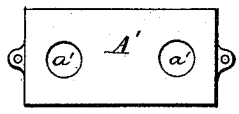

ATTEST.

Victor J. Evans.

F. B. Keefer

INVENTOR.

William H. Miller,

By A. G. Dyrenforth, Atty.

THE NORRIS PETERS CO., PHOTO-LITHO., WASHINGTON, D. C.

(No Model.) 2 Sheets—Sheet 2.

W. H. MILLER.

NOZZLE FOR STREET SPRINKLERS.

No. 456,767. Patented July 28, 1891.

Fig. 7.

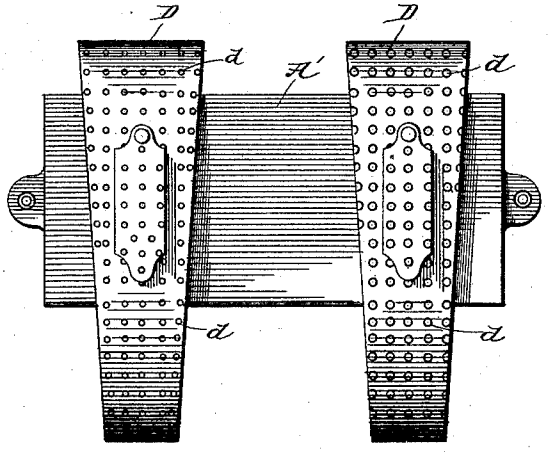

WITNESSES;

W. H. Lumphrey.

F. B. Kerfer.

INVENTOR,

William H. Miller.

BY

R. S. D. Greinforth.

ATTORNEY.

THE NORRIS PETERS CO., PHOTO-LITHO., WASHINGTON, D. C.

UNITED STATES PATENT OFFICE.

WILLIAM H. MILLER, OF SOUTH BEND, INDIANA.

NOZZLE FOR STREET-SPRINKLERS.

SPECIFICATION forming part of Letters Patent No. 456,767, dated July 28, 1891.

Application filed April 17, 1890. Serial No. 348,408. (No model.)

To all whom it may concern:

Be it known that I, WILLIAM H. MILLER, a citizen of the United States, residing at South Bend, in the county of St. Joseph and State of Indiana, have invented certain new and useful Improvements in Nozzles for Street-Sprinklers; and I do hereby declare the following to be a full, clear, and exact description of the invention, such as will enable others skilled in the art to which it appertains to make and use the same.

This invention relates to nozzles for street-sprinklers.

The object of the invention is to produce a nozzle for use in connection with street-sprinklers, whereby the spread of the water may be greatly increased.

The object of the invention is, furthermore, to produce a nozzle for use in connection with street-sprinklers or the like which shall be capable of being emptied of dirt or sediment in an expeditious manner and without requiring the use of tools.

The invention consists in the combination, with the interior face of a nozzle, of a partition for increasing the spread by directing the flow of water wholly to the point where the force is needed and there obstructing it, whereby pressure of weight and momentum is obtained and utilized.

The invention consists, furthermore, in a nozzle for street-sprinklers having perforations permitting the passage of the water and having on its bottom an opening, said opening being provided with a door having perforations and designed to give access to the interior of the nozzle for use in removing sediment or the like.

In the accompanying drawings, forming part of this specification, and in which like letters of reference indicate corresponding parts in all the figures, Figure 1 represents a rear view of a street-sprinkler with two of my improved nozzles attached thereto. Fig. 2 represents a sectional view of one form of embodiment of the invention. Fig. 3 represents the preferred form of embodiment. Fig. 4 represents an inverted plan view of the nozzle, showing the gate or door swung to one side to allow access to the interior of the nozzle. Fig. 5 is a side view of the valve-box, showing the nozzles secured within the box. Fig. 6 represents an inverted plan view of the bottom of the valve-box, showing the openings into which the nozzles are screwed; and Fig. 7 is an inverted plan view of one of the nozzles, showing the perforations of different sizes.

In the drawings, A represents the platform or frame of the sprinkler, upon which the tank is to be mounted.

A′ represents a water-inlet box, to which the water-supply pipe B from the tank is attached.

a represents the inlet at one side, and *a′* the outlet at the bottom.

C designates a valve working vertically in the water-inlet box, the end *c* to be connected in any suitable manner to a lever to be operated by the driver for regulating the amount of water to pass through the outlet *a′* into the nozzle D. The nozzle D is curved on its lower face, and is provided on its lower face only with perforations *d* for allowing the outlet of the water downward and sidewise, and is preferably made with the wings d^2, giving a greater bottom and side exposure.

E indicates a partition placed in the interior of the nozzle, and is preferably of the curvilinear shape shown in Fig. 3. The water entering the water-inlet box A′ through the supply-pipe B and openings *a*, and the valve C being open, passes out of the bottom of the box through the outlet *a′* into the nozzle D, and, striking against this partition E, which extends to a point within a short distance of the inner face of the wing d^2, passes with additional force through the perforations *d* in the wing d^2 of the nozzle. The water which does not pass through the wings d^2 of the nozzle passes below the partition out through the perforations in the bottom and other wing of the nozzle.

In order that the quantity of water discharged from the nozzles may be regulated at will, I employ two or more nozzles D, attached to the water-box A, the passage from the boxes to the nozzles being regulated by independent valves. The different nozzles have perforations of different sizes, so that by a proper manipulation of the valves three or more different grades of sprinkling may be done.

F represents a door in the bottom of each of the nozzles, and has the perforations *f*, corresponding to the perforations *d* in the bottom of the nozzle, this door being designed when swung aside, as shown in Fig. 4, to present ready access to the interior of the nozzle, and to facilitate the cleansing of the same and the removal of any sediment which may have collected during the employment of the sprinkler. This gate F may be secured in any manner to prevent its swinging open and allowing too great a discharge of water through its openings; but the preferred manner of attachment is by means of a pivot at one end and an ordinary latch at the other.

Instead of providing the interior of the nozzle with the partition E, as shown in Fig. 3, I may give this nozzle the form and configuration illustrated in Fig. 2, the bend d^3 serving the purpose of forcing the water through the perforations at d^2.

Having thus fully described my invention, what I claim as new, and desire to secure by Letters Patent, is—

1. The combination, with a nozzle having a perforated discharge-face, of a fender or deflector arranged adjacent to the water-inlet of the nozzle for increasing the spread of the water by directing it against the end, substantially as described.

2. A nozzle for street-sprinklers, having outlet-openings only on its outer and inner faces and on its bottom, and provided in its interior with a fender or deflector arranged adjacent to the water-inlet of the nozzle for increasing the spread of the water by directing it against the outer face, substantially as described.

3. A nozzle for street-sprinklers, having outlet-openings only on its outer and inner faces and on its bottom, and provided in its interior with a deflector or fender arranged adjacent to the water-inlet of the nozzle for increasing the spread of the water by directing it against the outer face, the bottom of the nozzle being provided with an opening, and a perforated movable door placed at the opening, substantially as described.

In testimony whereof I affix my signature in presence of two witnesses.

WILLIAM H. MILLER.

Witnesses:
RALPH S. TARBELL,
E. C. WESTERVELT.