H. GASSTROM.

RULE.

APPLICATION FILED OCT. 16, 1911.

1,068,887. **Patented July 29, 1913.**

Fig. 1.

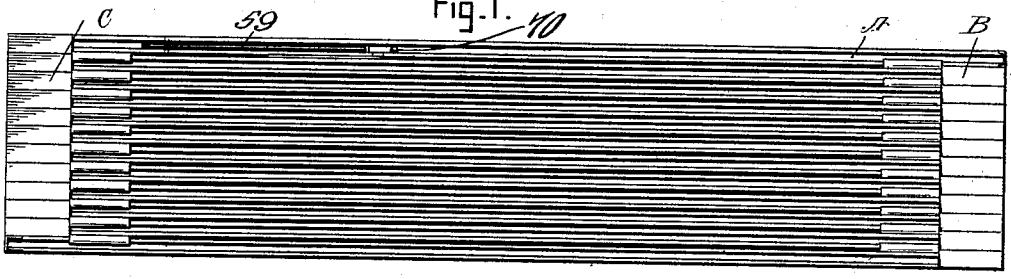

Fig. 2.

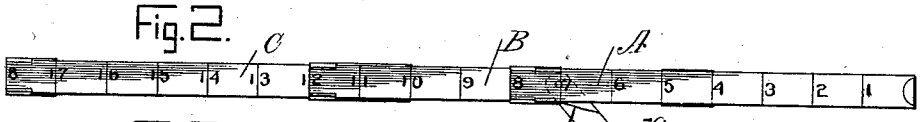

Fig. 3.

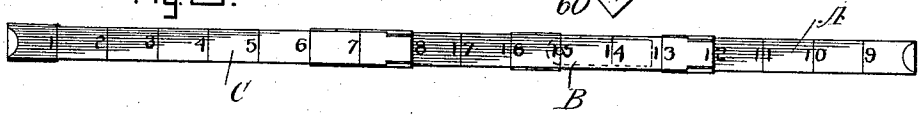

Fig. 4.

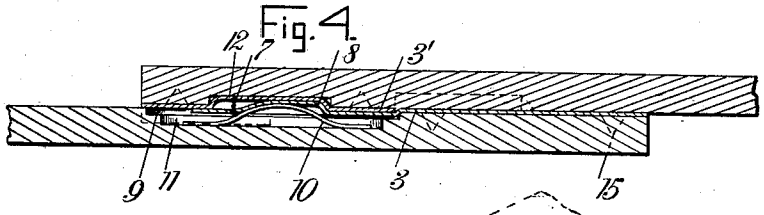

Fig. 5.

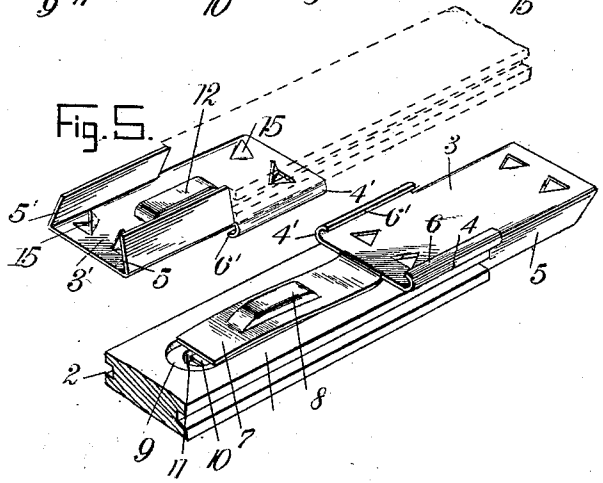

WITNESSES

C. K. Reichenbach.

L. J. Gallagher.

INVENTOR

Herman Gasstrom

BY Munn & Co

ATTORNEYS

COLUMBIA PLANOGRAPH CO., WASHINGTON, D. C.

UNITED STATES PATENT OFFICE.

HERMAN GASSTROM, OF NEW YORK, N. Y., ASSIGNOR TO DAHL MANUFACTURING COMPANY, OF NEW YORK, N. Y., A CORPORATION OF NEW YORK.

RULE.

1,068,887. Specification of Letters Patent. Patented July 29, 1913.

Application filed October 16, 1911. Serial No. 654,819.

To all whom it may concern:

Be it known that I, HERMAN GASSTROM, a subject of the Czar of Russia, and a resident of the city of New York, borough of Manhattan, in the county and State of New York, have invented a new and Improved Rule, of which the following is a full, clear, and exact description.

My invention relates generally to measuring instruments and more particularly to that class of extension rules described and claimed in Letters Patent No. 978,446, granted to me December 13, 1910.

The object of my invention is to provide an improved extensible rule made up of a plurality of sections movable longitudinally of each other, there being suitable means enabling the sections of the rule to be held in position for measurement in closed or extended position.

The invention comprises a rule made up of a plurality of sections, each section being provided with a device for engaging an adjacent section whereby they may be moved longitudinally of each other, the intermediate sections being also provided with suitable springs or equivalent devices whereby the closed or extended positions of the sections may be maintained.

Reference is to be had to the accompanying drawings, forming a part of this specification, in which similar characters of reference denote corresponding parts in all the views, and in which—

Figure 1 is a side view of a rule embodying my invention in closed position; Fig. 2 is a view of three of the sections in extended position; Fig. 3 is a reverse view thereof; Fig. 4 is a longitudinal sectional view showing the spring and coöperating parts; Fig. 5 is a perspective view of opposite ends of adjacent sections detached from each other, the end of one section being shown in broken lines.

The rule may be made in any desired number of sections, that shown in Fig. 1 comprising twelve, and the length of each section may be varied at will. Each end of each intermediate section, and one end of each end section is provided with a suitable engaging device 3, or 3′, for coöperation with an adjacent section, the device being preferably of integral formation as shown in Fig. 5; each intermediate section between the devices at the ends thereof, and each end section from one end to the central position of the device at the opposite end is provided with a longitudinally extending slot or recess 1, 2, on opposite sides.

The engaging device 3 is preferably made of a single piece of sheet material, the edge portions thereof being bent in opposite directions as at 4, 5; the edge portions 4, 4′, respectively have inwardly turned edges 6, 6′, for engagement in the slots 1, 2, on opposite edges of an adjacent section; the device is held in position on the section by bringing the opposite edge portions 5, 5′ into close engagement with the end of the section, the edges thereof being beveled for this purpose. Extending from one end of this device and preferably integral therewith, is a tongue 7, having a central depressed pocket 8, being in engagement with a leaf spring 10, contained in a recess 11, this recess communicating with a larger one 9, of substantially the same size as the tongue and adapted to receive it at certain times.

A device 3′ is carried at the opposite end of each section and in the extended position of the parts is adapted to coöperate with one of the aforesaid devices 3. This device is similar to the device 3 in that it is provided with the oppositely bent edge portions 4, 4′, 5, 5′ and 6, 6′ the functions of which are the same in both devices; midway of the bent edges 5, 5′, and on the reverse side of the device, is a depressed portion or pocket 12 of slightly greater diameter than the pocket 8, the projection formed by the pocket 8 engaging in the pocket 12 when the parts are in extended position. As a further means of securing the devices on the sections each of them may be provided with any desired number of integral teeth 15 adapted to be driven into one of these sections.

The relation of the parts is shown particularly in Fig. 4; the two sections are extended and are maintained in position by the engagement of the projection formed by the pocket 8 in the pocket 12 through the pressure exerted by the leaf spring 10. When it is desired to return the parts to the position shown in Fig. 1, the upper section is moved along the lower one, sufficient pressure being applied to the ends to overcome the pressure of the spring 10, thereby carry-

ing the projection formed by the pocket 8 out of engagement with the pocket 12. When this is accomplished the projection formed by the pocket 8 will bear against the adjacent section, the sections being thereby held substantially fixed in any relative position. In this description of the rule I have merely described the inter-engagement and operation of two adjacent sections; it is obvious, however, that any number of sections may be similarly connected together. When it is desired to extend some of the sections in order to use the rule, it is merely necessary to move each succeeding section into extended position, or until the engagement of the above-mentioned projection and pocket takes place.

From Figs. 2 and 3 it is to be noted that the end sections A and C are not fully extended in operative position and the reason for this is as follows: In Fig. 2 it is to be noted that the marks on the section A extend from 1 to 8; those exposed on section B from 8 to 12 and on section C from 12 to 18; the index at the left end of section C is 18 which is the distance between the extreme ends of the three sections combined. Fig. 3 is a reverse view of Fig. 2 and it will be observed that the index at the right of section A is 8 while that at the left of the intermediate section (B) is 18, which index always corresponds to that at the left end on the opposite side when the section A occupies its outermost position. Such a system of indexes or markings permits the entire length of the rule, in any extended position, to be used for measuring and makes it unnecessary to turn it over to read the length, this length being indicated in all cases as explained.

The engaging pocket 12 in the device 3′ carried by each of the intermediate sections at one end, is positioned at an intermediate point of the said device, as shown in Fig. 1, this construction being necessary in order to enable the marking or indexing just explained to be carried out; the end portion of the device 3′ abuts the end of the device 3, or a suitable pin 70 may be placed within the slot 1, 2.

In order to increase the uses to which my rule may be put, I have provided an auxiliary plate 59 pivotally mounted on one of the sections, preferably the first, this plate being provided with marks 60 whereby it may be positioned at any desired angle with respect to the section; such a plate enables one who is using the rule to quickly and conveniently lay out any desired angle.

Of course many changes may be made in the detailed features of my device in order to adapt it to use in different callings; such modifications, however, not involving a departure from the invention as embodied in the following claims.

Having thus described my invention, I claim as new, and desire to secure by Letters Patent:—

1. A rule made up of a plurality of sections, each section having a plurality of longitudinally extending slots, means carried by each section and engaging the slots of the adjacent section, whereby the sections may be moved longitudinally with respect to each other, each section being provided with a recess, a spring within the recess, and an element provided with a pocket receiving the spring, the projection formed by the said pocket engaging the adjacent section, whereby such sections are held in position relatively to each other.

2. A rule comprising a plurality of sections each section having a plurality of longitudinally extending slots, a device carried at one end of each section and engaging in the said slots of an adjacent section, whereby one section may be moved along the other, means carried by one section and comprising a spring and an element having a pocket therein containing the spring, the adjacent section being provided with an element having a pocket into which the projection formed by the first mentioned pocket engages when the sections are extended with relation to each other, whereby they may be retained in such extended position.

3. A rule comprising a plurality of sections movable longitudinally with respect to each other, longitudinally extending slots at the edges of each section, a device carried by each section engaging in the slots of an adjacent section, whereby a longitudinal movement of the sections is permitted, each section being provided with a recess, a spring contained in the said recess, an element having a pocket therein receiving the said spring, an element having a pocket therein carried by an adjacent section and adapted to receive the projection formed by the first mentioned pocket when the sections are extended with respect to each other, whereby they may be held in such position, the projection formed by the first mentioned pocket engaging the adjacent section during longitudinal movement of the sections.

4. A rule made up of a number of sections placed one on top of the other, means coöperating with adjacent sections whereby they may be moved longitudinally with respect to each other, one side of each section being provided with a recess, a spring within the recess, an element provided with a pocket for holding the spring in position, the projection formed by the pocket engaging the adjacent section, whereby when the sections are moved longitudinally with respect to each other the said projection will exert a pressure against the adjacent section.

5. A rule made up of a plurality of sec-

tions of substantially equal length placed one above the other, means between each section and the adjacent one and in engagement with each, whereby the sections may be moved longitudinally with respect to each other, thereby forming a rule of extended length, a spring at one end of each section, an element provided with a pocket carried by each section for maintaining the spring in position, the adjacent section being provided with an element having a pocket therein into which the projection formed by the said first pocket engages when the sections are extended, whereby they may be retained in such extended position.

6. A rule comprising a plurality of sections movable longitudinally with respect to each other, each section being provided with a recess, a spring contained in the recess, an element having a pocket therein, the said pocket being adjacent the said recess and receiving the said spring, an element having a pocket therein carried adjacent one end of an adjacent section for receiving the projection formed by the first mentioned pocket when the parts are extended, movement of the sections to normal position bringing the said projection out of engagement with the second pocket, the said projection then engaging the adjacent section, whereby the parts are held relatively one to the other.

7. A rule comprising a plurality of sections positioned one above the other, slots in opposite edge portions of each section, a device provided with bent edge portions carried at one end of each section, the said edge portions engaging the said slots on the adjacent section, whereby the parts are guided in their movement, a tongue extending from the said device, each section being provided with a recess, a pocket in the tongue, said pocket being adjacent the said recess, a spring contained within the recess and pocket, the projection formed by the pocket bearing against the adjacent section as the parts are moved relatively to each other, the adjacent section being provided with an element having a pocket therein which pocket receives the projection formed by the first pocket when the parts are in extended position, whereby they are held in such position.

8. A rule made up of a plurality of sections placed one above the other, each section having longitudinally extending slots along its opposite edges respectively, a device carried at one end of each section comprising oppositely bent portions for engagement in the slots of the adjacent section, whereby the sections are guided in their movement, the said device including a tongue having a pocket therein, a recess in each section, a spring contained in the recess and extending into the pocket in the tongue, the projection formed by the said pocket bearing against the adjacent section when the sections are moved with respect to each other, a device adjacent one end of the adjacent section, the said device having oppositely bent portions for engagement with the slots in an adjacent section, whereby they may be moved longitudinally of each other, the said device being provided with a pocket receiving the projection formed by the pocket in the first device when the part are extended, whereby they may be held in such extended position.

In testimony whereof I have signed my name to this specification in the presence of two subscribing witnesses.

HERMAN GASSTROM.

Witnesses:
C. M. NICHOLSON,
LAURENCE J. GALLAGHER.

Copies of this patent may be obtained for five cents each, by addressing the "Commissioner of Patents, Washington, D. C."