Jan. 18, 1944. E. P. ROSS 2,339,521

GUN SIGHT

Filed Feb. 8, 1941 2 Sheets-Sheet 1

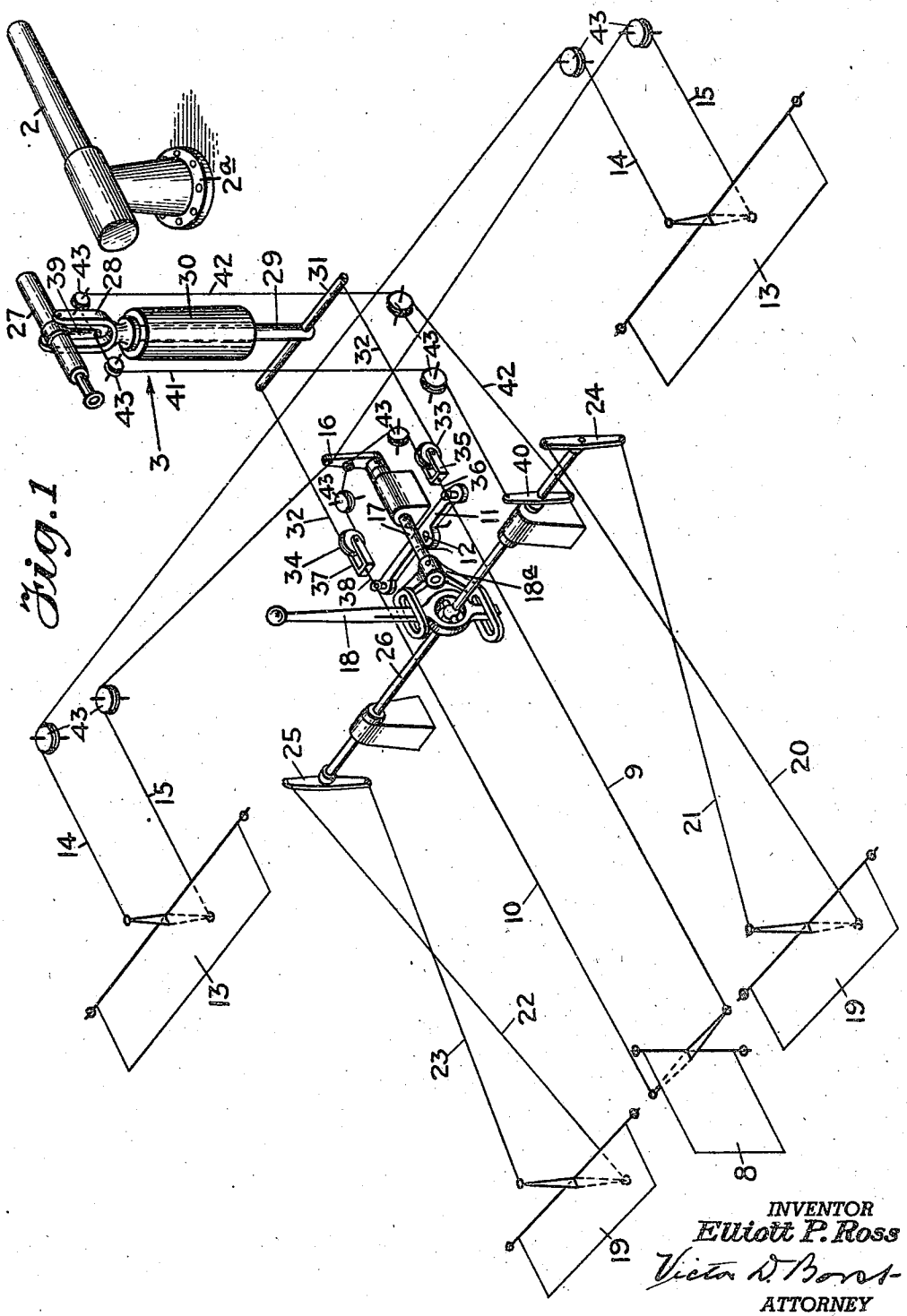

Fig. 1

INVENTOR
Elliott P. Ross
Victor J. Evans
ATTORNEY

Jan. 18, 1944. E. P. ROSS 2,339,521

GUN SIGHT

Filed Feb. 8, 1941 2 Sheets-Sheet 2

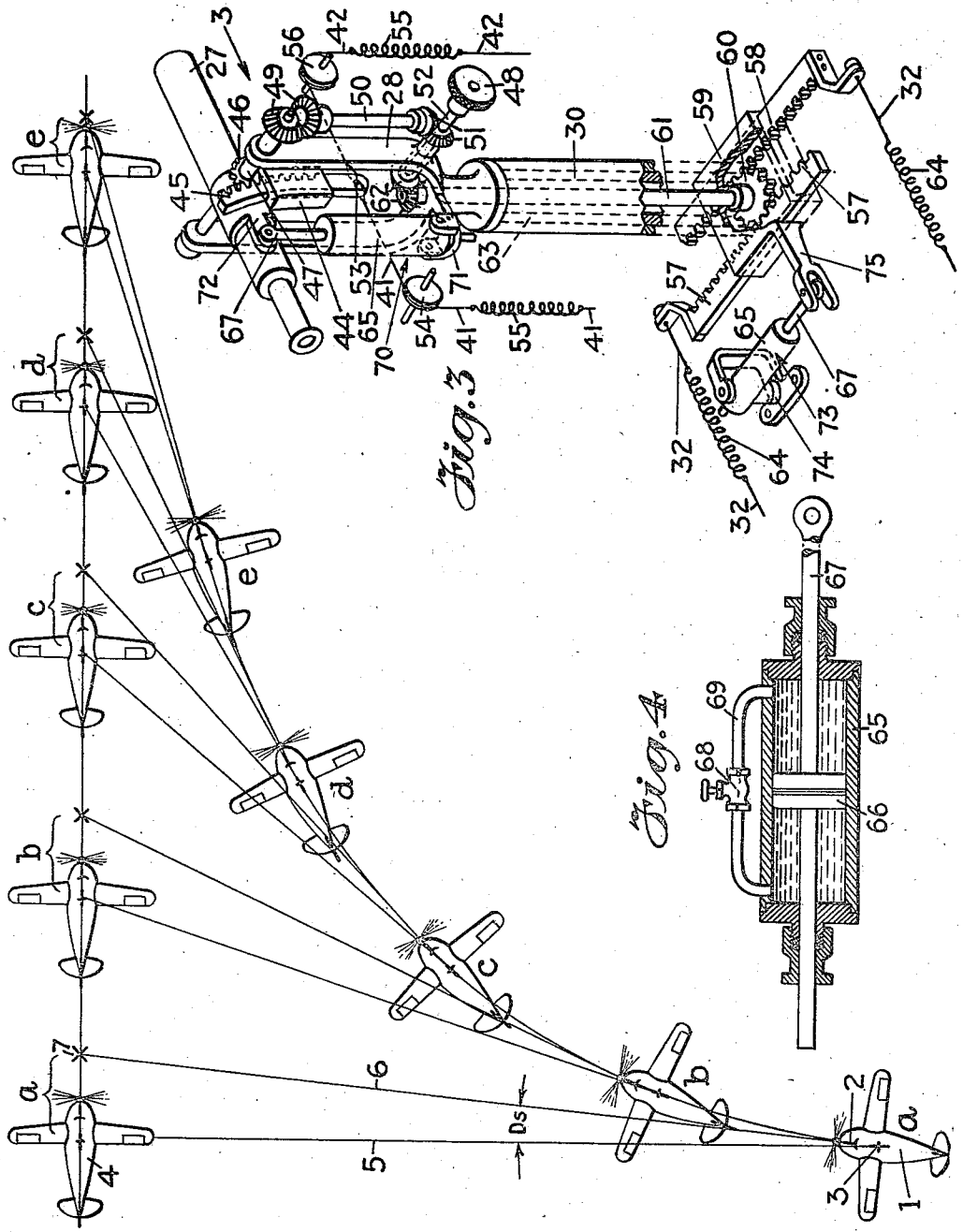

Fig. 2

Fig. 3

Fig. 4

INVENTOR
Elliott P. Ross

BY

Victor D. Bard

ATTORNEY

Patented Jan. 18, 1944 2,339,521

UNITED STATES PATENT OFFICE

2,339,521

GUN SIGHT

Elliott P. Ross, Forest Hills, N. Y., assignor to Ford Instrument Company, Inc., Long Island City, N. Y., a corporation of New York

Application February 8, 1941, Serial No 377,991

5 Claims. (Cl. 89—37.5)

This invention relates to gun sights and particularly to sights for guns that are mounted in fixed positions on a firing ship such as, for example, an airplane.

When firing a gun fixedly mounted on an airplane at a stationary target the pilot merely has to direct the plane, and thereby the gun, at the target. When firing at a target which is moving across the line of fire the pointing of a gun fixedly mounted on an airplane has been a difficult problem because the gun has to be trained and elevated with reference to the target by adjusting the horizontal and azimuth position of the airplane relative to the line of sight and it is necessary for the pilot to approximate the angle that the airplane must lead or point ahead of the target so that the fired projectile will intercept the moving target.

The problem is further complicated because the rate of change of bearing of the target and the corresponding displacement of the sight is continually changing as a firing airplane closes in from one side of a target, such as a moving airplane.

The solution of the problem also involves the determination of the elevation of the sight relative to the gun that has to be introduced to compensate for the rate of vertical angular movement of the target relative to the firing airplane and to apply corrections for the shape of the trajectory of the projectile, which is a function of the range.

The object of this invention is to provide a simple sight for a gun that is fixedly mounted on an airplane by providing a sight mounted on the airplane for rotation about an axis parallel to the horizontal plane of the airplane for elevation corrections and for rotation about an axis parallel to the vertical axis of the airplane for deflection corrections and motion transmitting connections between the maneuvering control levers of the airplane and the sight whereby the sight is positioned relative to the bore of the gun for deflection and elevation corrections.

Another object of the invention is to provide in such a sight mechanism an adjustment in the motion transmitting connections between the maneuvering controls and the sight to vary the setting of the sight in accordance with the time of flight or range of the target.

Another object of the invention is to provide in such a sight mechanism a delay action device in the said motion transmitting means to compensate for the inertia of the airplane against changes in direction and therefore to delay the movement of the sight from the target upon movement of the said motion transmitting means.

It is well known in the art of maneuvering airplanes that in executing a turn or change of direction of flight in space, say to the right, the rudder is moved to the right and the plane is banked with the right wing down by means of the ailerons. As the turning rate is substantially proportional to the extent of movement of the rudder and aileron surfaces from their mid or neutral positions, the positions of the rudder and the aileron controls from their mid or neutral positions may be taken as a measure of the rate of turning.

It is also well known in the fire control art that the horizontal displacement of the sight from the bore of the gun (deflection or Ds) is proportional to the rate of change of bearing (dB) of the target and the time of flight (t) of the projectile and that the time of flight of the projectile is a function of the range (R). This relation is taught in Patent 1,067,859 and may be expressed in the form of an equation:

$$Ds = dB \cdot t \qquad (1)$$

or

$$Ds = dB \cdot fR \qquad (2)$$

It therefore follows that if one airplane is firing at another and the pilot is changing its course progressively in order to keep the gun sight on the target as he closes in on the target from one side, the sight must be displaced in deflection relative to the gun in proportion to the instantaneous rate of turning and the range. If the sight is held on the target and the sight is so set for deflection, a projectile fired in the direction of the movement of the airplane will intercept the target. It will be noted that the airplane serves as a gun mount and the steering of the airplane corresponds to training of the mount. The only effect of the speed of the airplane is to increase the velocity of the projectile. As the speed is substantially constant it may be allowed for in applying the ballistic factors for the gun.

Likewise, the position of the stabilizers (horizontal rudders) is a measure of the rate of change of vertical angular position of the airplane and is therefore a measure of the rate of change in elevation of the target with reference to the firing plane when the sight is maintained on the target. The correction in elevation (Us) is proportional to the product of the rate of change of

elevation (dE) and the time of flight (t) and may be expressed by the equation

$$Us=dE\cdot t \quad (3)$$

Since the time of flight (t) is a function of the range (R), Equation 3 may be expressed as

$$Us=dE\cdot fR \quad (4)$$

Therefore if an airplane is firing at another airplane and changing its angle of vertical position progressively as it closes in on the target and the sight is displaced from the gun in elevation in proportion to the instantaneous rate of change of elevation and the range, and if the sight is held on the target, the sight will be properly set in elevation for the projectile fired in the direction of flight of the airplane to intercept the target.

The invention will first be disclosed in its simplest form in which no correction is applied to the movement of the sight for the range of the target. This embodiment of the invention would be used when smaller caliber guns are fired. The ranges of these guns are naturally short and the correction for range may be introduced for some selected average value. A modification of the mechanisms will later be disclosed in which adjustments are made in the position of the sight with reference to the bore of the gun in accordance with the actual range of the target.

In the drawings:

Fig. 1 is an isometric view of the mechanisms of the invention as applied to an airplane;

Fig. 2 is a plan view of an airplane in its consecutive positional relation to another airplane at which the first airplane is firing;

Fig. 3 is an isometric view partly in section of a modification of the sight and mechanism associated therewith by which the sight is adjusted in position in accordance with the range of the target and includes a motion delay device in the sight adjusting means; and

Fig. 4 is a cross section view of one form of a delay action device.

Referring to Fig. 2, the outline 1 represents an airplane on which is fixedly mounted a gun represented generally as 2, with its bore parallel to the fore and aft centerline or axis of the airplane. The sighting mechanism is represented generally as 3. The outline 4 represents another airplane, which is the target. The direction of the line of sight is represented by line 5 and the direction of flight of the firing airplane and the path of the projectile is represented by line 6. The point of intercept of the projectile and the target 4 is represented as a cross 7. The angle between lines 5 and 6 is the deflection (Ds).

The corresponding positions of the firing airplane and the target, as the firing airplane closes in on the target, are indicated by the letters a, a to e, e inclusive.

In Fig. 1 there is shown a conventional maneuvering control system of an airplane. The vertical rudder 8 is moved by wires 9 and 10 fastened to foot-operated control bar 11 which is pivotally supported at 12. Ailerons 13 are moved by wires 14 and 15 by lever 16 to which wire 15 is attached. Lever 16 is moved by shaft 17 to which it is pinned and shaft 17 is moved by lever 18 through bracket frame 18a which is pinned to shaft 17. The horizontal stabilizers 19 are moved by wires 20 and 21 and wires 22 and 23, which are connected to levers 24 and 25 respectively. Levers 24 and 25 are pinned to shaft 26 which is pinned to lever 18 at a point in alignment with the center of shaft 17.

A conventional sight 27 is mounted on a yoke 28 and a downwardly extending shaft 29 which is free to rotate in bushing 30. At the lower end of shaft 29 is secured a lever 31 the ends of which are connected to control bar 11 and lever 16 by a wire 32 which passes from one end of lever 31 to and over pulley 33, to lever 16 to which it is secured, thence to and over pulley 34 and to the other end of lever 31. The bracket 35 of pulley 33 is connected by wire 36 to one end of control bar 11 and the bracket 37 of pulley 34 is connected by wire 38 to the other end of control bar 11.

On the lower side of sight 27 is secured an arm 39 which is connected to lever 40 by wires 41 and 42. Lever 40 is pinned to shaft 26.

The length of the wires mentioned herein are so adjusted that when all of the maneuvering control levers are in their mid or neutral positions, the optical axis of the sight 27 is parallel to the horizontal center line of the airplane and the bore of the gun 2 which is secured to the airplane by base 2a. The sight 27 is located on the airplane so that the pilot in his normal seated position at the maneuvering controls may conveniently look through the sight.

Guide pulleys 43 are supplied as occasion demands.

In the modification disclosed in Fig. 3 the arm 39 shown in Fig. 2 is replaced by a hollow arcuate frame 44 in which slides arcuate rack 45. Rack 45 is in mesh with pinion 46 secured to the hollow shaft 47 which is connected to knob 48 by gears 49, shaft 50, gears 51 and shaft 52. Knob 48 is settable in accordance with the time of flight as a function of range. Rack 45 is made arcuate and has a radius of curvature substantially equal to the distance from the point 53 where wire 41 is fastened to rack 45 to the guide pulley 54. Rack 45 is made arcuate so that the raising and lowering of rack 45 with adjustments for changes in range will not move the sight about its horizontal axis when the horizontal stabilizers 19 are in their neutral or normal positions, except that the sight may be depressed relative to the gun as the range is increased by selecting the amount of curvature to rack 45. This shifting of the sight is desirable to allow for the curvature of the trajectory. A pair of springs 55 are inserted in wires 41 and 42 to allow for the longer path along wires 41 and 42 between pulleys 54 and 56 as point 53 is raised or lowered relative to the level of pulleys 54 and 56 and to permit delayed movement of the sight from the time of operation of the controls as will be explained later. It will be seen that the angular movement of the sight in elevation per unit of linear movement of wires 41 and 42 is increased as the lever length of arcuate rack 45 is shortened with reference to the trunnion axis of the sight.

Correcting the deflection imparted to the sight for range is accomplished by providing two racks 57 and 58 which are moved in guide block 59 by pinion 60 connected to shaft 61. Shaft 61 is connected to shaft 52 by gears 62. The yoke 28 is solidly connected with guide block 59 by tube 63 which is rotatably mounted in bushing 30. It will thus be seen that the angular movement of tube 63, yoke 28 and sight 27 per unit linear movement of wires 32 will be inversely proportional to the distances from the points of fastening of the wires 32 on the racks 57 and 58 to the

axis of shaft 61, which distances are varied by the movement of knob 46 in accordance with range of the target. A spring 64 is inserted in each of the wires 32 to compensate for the variations in the distances from pulleys 34 and 33 from the outer ends of racks 57 and 58, as the positions of racks 57 and 58 are changed relative to the axis of shaft 61 and in addition to provide for delayed action of the sight after the movement of the maneuvering controls.

The sight may be offset from the bore of the gun to allow for drift, which is substantially proportional to the time of flight by assembling the mechanism with block 59 and bars 57 and 58 at a slight angle to the control bar 11. Thus as the lengths of bars 57 and 58 are adjusted for range, the sight will be offset from the bore of the gun an amount required to correct for the drift of the projectile in addition to the amount caused by the position of the maneuvering controls.

It is well known in the maneuvering of airplanes that the airplanes do not respond instantaneously to the movement of the control surfaces due to the inertia of the airplane itself. It is therefore apparent, especially when firing at short ranges and at a target whose relative position is rapidly changing, that the sight would be moved to its new deflection position before the airplane would be turning at a rate corresponding to the position of the controls. Also, when firing on a target requiring a change in the turning rate to follow the target, an increase in the rate of turning sets in a greater deflection, thus moving the sight in a direction further away from the target. To overcome these two characteristics there is provided a delay action device in the motion transmitting means between the control levers and the sight.

Referring to Figs. 3 and 4, the particular form of delay action device selected consists of a cylinder 65, filled with oil or other suitable liquid, in which slides piston 66. The flow of oil from one side of piston 66 to the other side upon movement of stem 67 connected thereto, is controlled by a valve 68 in pipe 69 connecting the two ends of the cylinder 65.

To delay the action of the sight in elevation, the delay action device shown generally as 70 is pivotally mounted on arm 71 secured to bracket 28. The stem 67 is pivotally connected to lug 72 on frame 44. Because of the delay action device 70 the normally balanced condition of the springs 55 is disturbed by actuation of the stabilizing or elevating control, this unbalanced condition then acts on the piston of the delay action device to displace oil at a rate depending on the opening of the valve 68 until the springs have returned to their normal balanced condition and the position of the sight agrees with the position of the control.

To delay the action of the sight in deflection, the delay action device shown generally as 73 is pivotally mounted on lug 74 secured to the frame of the airplane. The stem 67 is pivotally connected to arm 75 extending from guide block 59. Thus the normally balanced tension of springs 64 is disturbed by movement of the rudder control but the balanced condition is restored by the yielding of the delay action device 73 and the sight is brought to the position in deflection corresponding to the position of the rudder control.

The valves 68 of the delay action devices 70 and 73 are first adjusted so that the sight comes to its proper position in the same time that the aircraft takes to fully respond to the movement of the controls. This adjustment compensates for the delayed response of the airplane to the controls because of the inertia of the airplane.

It is desirable to still further increase the effect of the delay action devices 70 and 73 by further closing the valves 68 so that the response of the sight to the maneuvering controls is slower than the response of the plane. Because of this further adjustment of the valves 68 the sight first follows the movement of the airplane in changing direction under the action of the maneuvering controls and the pilot sees that he has applied the change of control in the right direction. Without this increased delay action the sight moves angularly relative to the plane in a direction opposite to that in which the plane is angularly moving in space and as the pilot does not observe any movement of the sight relative to the target his tendency is to greatly overcorrect the change in direction of the airplane for any change in conditions with the result that a hunting action of the gun and sight is set up relative to the target.

It is obvious that various changes may be made by those skilled in the art in the details of the embodiments of the invention as disclosed in the drawings and described above within the principle and scope of the invention as expressed in the appended claims.

I claim:

1. A sighting mechanism for a gun fixedly mounted with its bore substantially parallel to the fore and aft axis of a dirigible craft, comprising means positionable to control the angular rate of turning of the craft, a sight mounted for angular movement relative to the bore of the gun, and sight adjusting means actuated in accordance with the position of the control means to angularly position the sight relative to the bore of the gun, said sight adjusting means including an element settable in accordance with the range of the target for proportionally modifying the effect of the adjusting means in positioning the sight.

2. A sighting mechanism for a gun fixedly mounted with its bore substantially parallel to the fore and aft axis of a dirigible craft comprising means positionable to control the angular rate of turning of the craft about an axis perpendicular to the fore and aft axis, a sight mounted for angular movement relative to the bore of the gun about an axis parallel to the said perpendicular axis, and sight adjusting means actuated in accordance with the position of the control means to angularly position the sight about its said axis relative to the bore of the gun.

3. A sighting mechanism for a gun fixedly mounted with its bore substantially parallel to the fore and aft axis of a dirigible craft comprising means positionable to control the angular rate of turning of the craft about an axis perpendicular to the fore and aft axis, a sight mounted for angular movement relative to the bore of the gun about an axis parallel to the said perpendicular axis, and sight adjusting means actuated in accordance with the position of the control means to angularly position the sight about its said axis relative to the bore of the gun, said sight adjusting means including an element settable in accordance with the range of the target for proportionally modifying the effect of the adjusting means in positioning the sight.

4. A sighting mechanism for a gun fixedly mounted with its bore substantially parallel to

the fore and aft axis of a dirigible craft, comprising means positionable to control the angular rate of turning of the craft, a sight mounted for angular movement relative to the bore of the gun, sight adjusting means actuated in accordance with the position of the control means to angularly position the sight relative to the bore of the gun, and means operably connected with the adjusting means for delaying the action of the said adjusting means.

5. A sighting mechanism for a gun fixedly mounted with its bore substantially parallel to the fore and aft axis of a dirigible craft, comprising means positionable to control the angular rate of turning of the craft, a sight mounted for angular movement relative to the bore of the gun, sight adjusting means actuated in accordance with the position of the control means to angularly position the sight relative to the bore of the gun, said sight adjusting means including an element settable in accordance with the range of the target for proportionally modifying the effect of the adjusting means in positioning the sight, and means operably connected with the adjusting means for delaying the action of the said adjusting means.

ELLIOTT P. ROSS.