Dec. 8, 1964 J. W. DUDLEY 3,160,850

UNDERWATER LOCATING APPARATUS

Filed Dec. 27, 1960 4 Sheets-Sheet 1

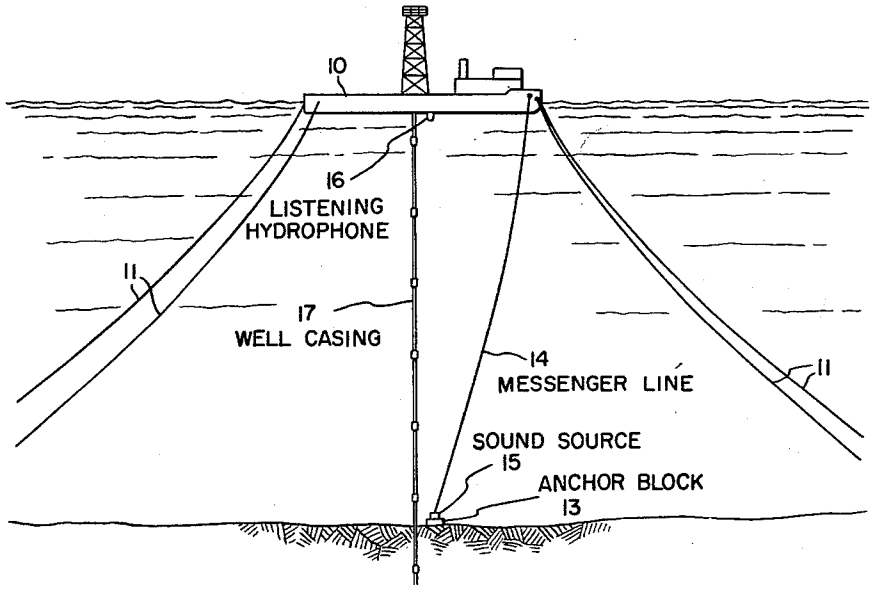

Fig-1

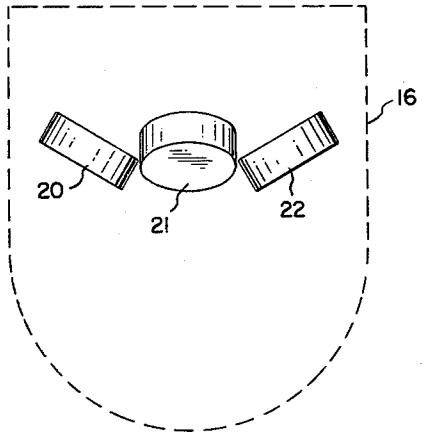

Fig-2

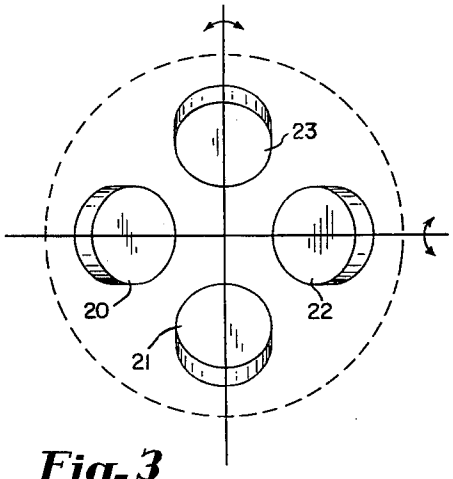

Fig-3

INVENTOR.
JOHN W. DUDLEY
BY Osmund A. Dahle
ATTORNEY

Dec. 8, 1964 J. W. DUDLEY 3,160,850

UNDERWATER LOCATING APPARATUS

Filed Dec. 27, 1960 4 Sheets-Sheet 2

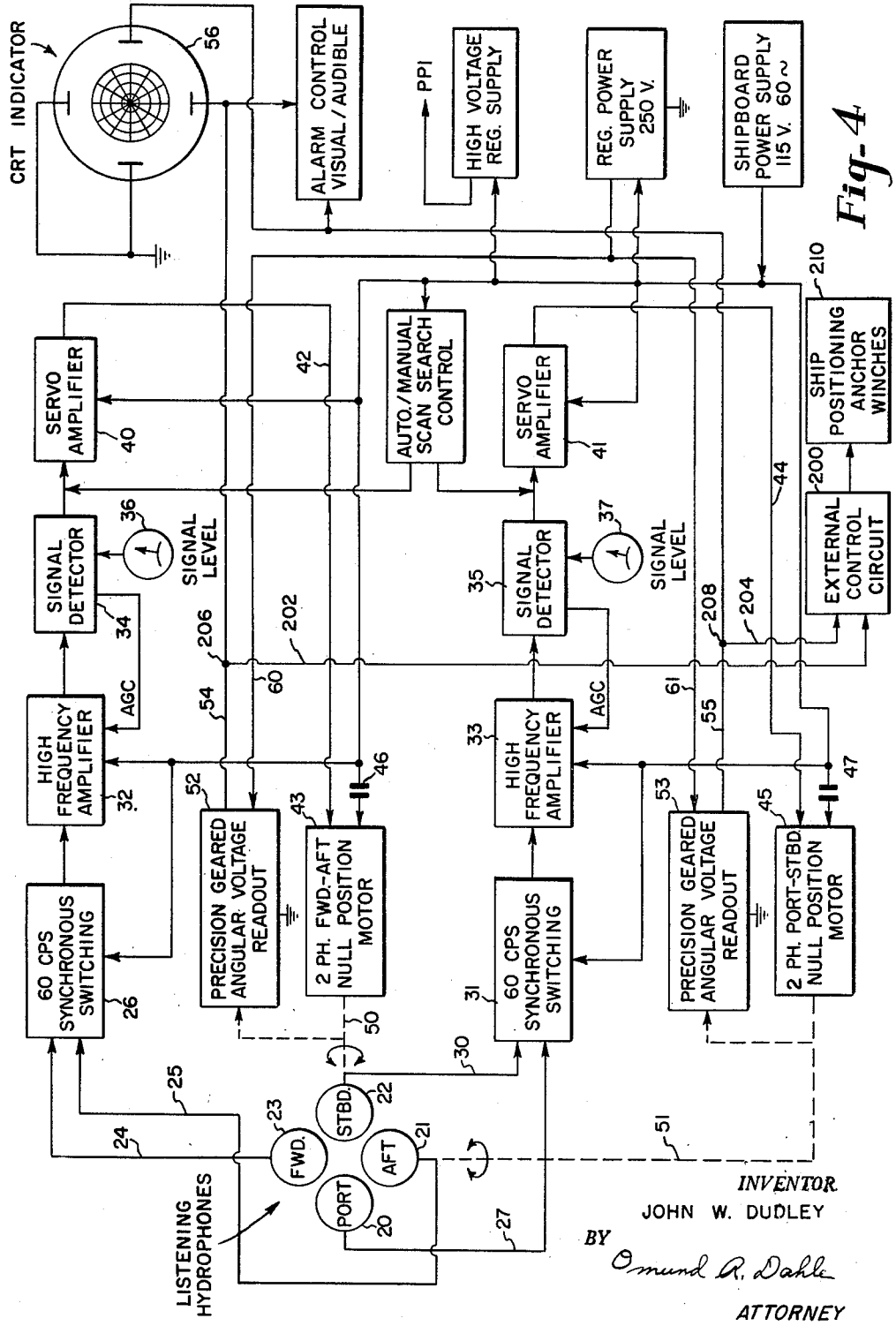

Fig. 4

INVENTOR
JOHN W. DUDLEY
BY
Osmund R. Dahle
ATTORNEY

Dec. 8, 1964 J. W. DUDLEY 3,160,850

UNDERWATER LOCATING APPARATUS

Filed Dec. 27, 1960 4 Sheets-Sheet 3

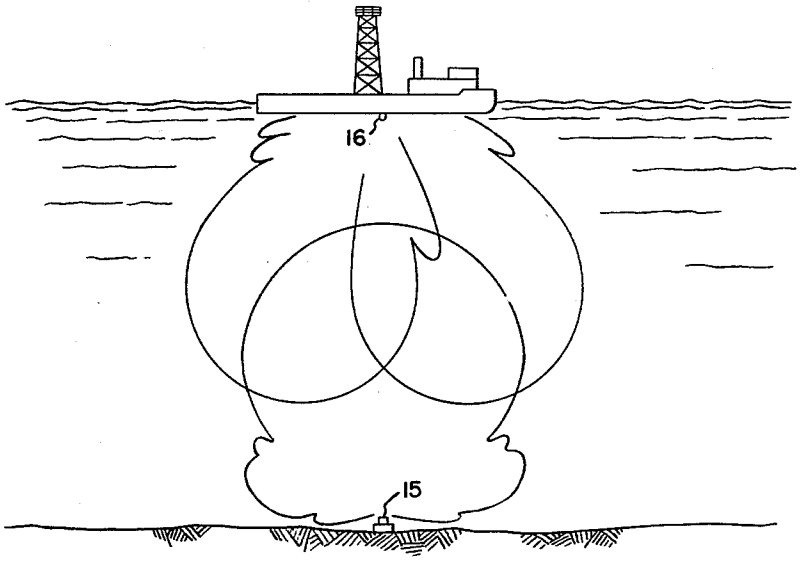

Fig-6

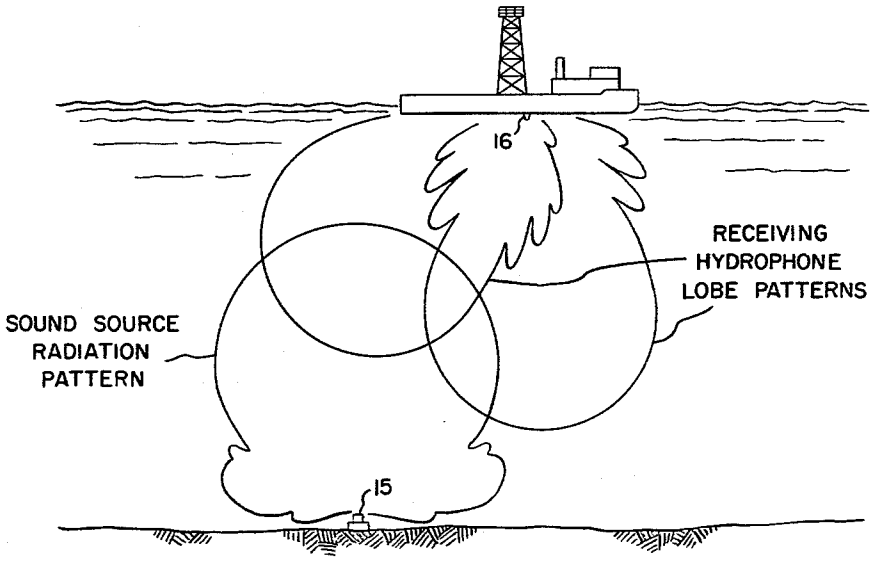

Fig-5

INVENTOR.
JOHN W. DUDLEY
BY Osmund R. Dahle
ATTORNEY

Dec. 8, 1964 J. W. DUDLEY 3,160,850

UNDERWATER LOCATING APPARATUS

Filed Dec. 27, 1960 4 Sheets-Sheet 4

FIG. 7

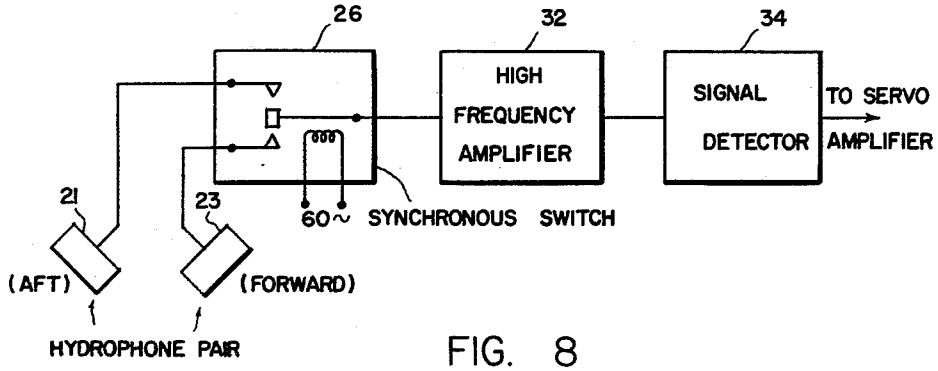

FIG. 8

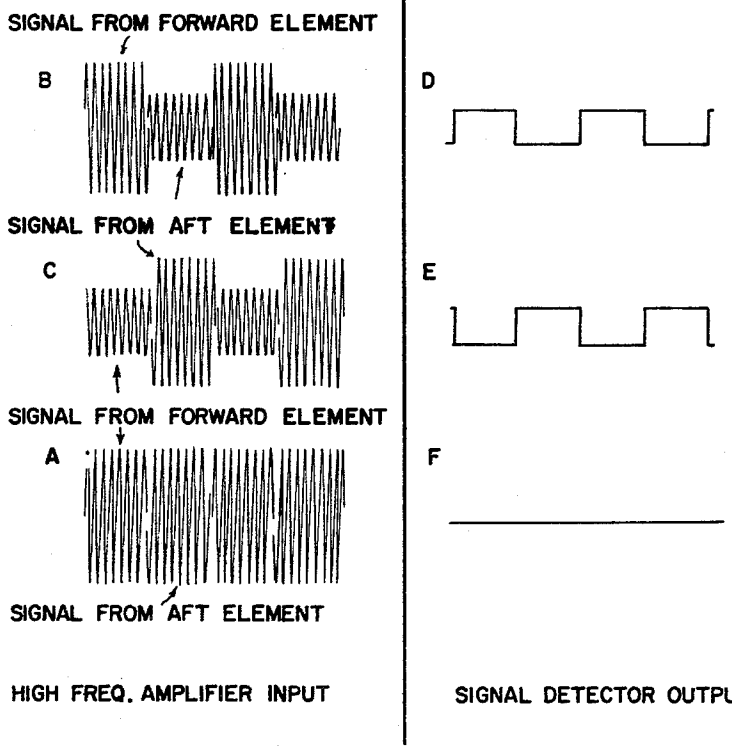

INVENTOR.
JOHN W. DUDLEY
BY Roger W. Jensen
ATTORNEY

United States Patent Office 3,160,850
Patented Dec. 8, 1964

3,160,850

UNDERWATER LOCATING APPARATUS

John W. Dudley, Seattle, Wash., assignor to Honeywell Inc., a corporation of Delaware

Filed Dec. 27, 1960, Ser. No. 78,461
2 Claims. (Cl. 340—6)

This invention relates to the field of underwater sound apparatus, and more particularly to a system for stationing a ship over a predetermined spot on the ocean floor.

In the field of offshore oil-well drilling operations especially wherein heavy tides, relatively large depths, severe storms or the location of structures in and near shipping lanes are encountered, it is not feasible to utilize permanent structures rooted on the bottom. In these areas it has become necessary to use floating platforms having mobility which can be moved when necessary, perhaps because of impending severe storms or the like. Applicant's invention relates to apparatus for rapidly and accurately relocating the drilling rig over the bore hole and for maintaining location thereover.

A single transmitting source of compressional wave energy which may be sonic or positioned on the sea bottom at or near the drill hole, serves as the homing point for the shipboard mounted automatic tracking system. The system provides means for sensing the desired sound source target signal and receiving it in four directional quadrants about the relative bearing line. The quadrant information signals are distributed into the appropriate forward-aft and port-starboard control motors and bearing indicator for continuous bearing correction.

It is an object of this invention to provide apparatus for accurately locating a craft over a predetermined point.

It is a more specific object of this invention to provide automatic sonar tracking apparatus for locating a ship over a predetermined submerged point.

It is another specific object of this invention to provide automatic sonar tracking apparatus for locating an oil drilling ship over a drill hole on the sea bottom.

These and other objects of the present invention will be more readily apparent upon a consideration of the accompanying specification, claims, and drawings of which:

FIGURE 1 is a pictorial sketch of an oil drilling ship anchored in place over a drill hole on the ocean floor.

FIGURES 2 and 3 show the relative arrangement of the four quadrant listening hydrophone elements;

FIGURE 4 is a schematic representation of the indicating system;

FIGURES 5 and 6 are pictorial representations aiding in explaining the operation of the equipment; FIGURE 7 is a schematic representation of the synchronous switching arrangement for the forward-aft channel; and FIGURE 8 represents the wave forms at the output of the synchronous switch and the signal detector.

Referring now to FIGURE 1 there is disclosed an oil drilling ship **10** which is suitably anchored over the drill site by a plurality of anchor cables **11** which extend in diverse directions to permit stationing of the ship. A large anchoring block **13** is established on the bottom and a messenger line **14** is affixed thereto extending to the surface ship. An underwater sound source **15** may be lowered on the messenger line to a semi-permanent position on the anchor block. Beneath the ship there is mounted a tracking hydrophone soundome unit **16**, which is preferably mounted amidship near the keel line. A well casing **17** is driven from the ship into the ocean floor.

The underwater sound source **15** is based on the most efficient method of converting D.C. battery power to acoustic energy. The sound source comprises a transistorized self-blocking oscillator to provide millisecond

pulses, which may be in the 25 kc. range, at a suitable repetition rate, for example, a repetition rate of 60 cycles per second could be used. The output of the oscillator powers a transmitting hydrophone which operates essentially as a nondirectional point signal source. The use of a pulse source allows peak acoustic power output with a low average power demand on the self-contained battery power supply, so that the sound source can operate for several months without being raised from the bottom for replacement of batteries. If desirable, a C.W. transmitting sound source may be used instead of the pulse type.

Referring now to FIGURES 2 and 3, the passive tracking hydrophone unit **16** comprises four hydrophone elements **20**, **21**, **22**, and **23**, which may be of the barium titanate type. Each of these elements has a nominal 60° receiving lobe pattern. Each hydrophone element is displaced from the bearing line by approximately 30°, as shown in FIGURES 2 and 3, to cover the four quadrants and the elements are locked into a permanent fixed relationship with respect to one another by suitable mechanical connections, not shown. Thus directional sensing will be accomplished by utilizing a four element receiving transducer to provide four conical receiving beam lobes about the axis perpendicular to the face of the tracking head. The receiving lobes are displaced from the centerline sufficiently to allow amplitude discrimination between the paired quadrants forward-aft and port-starboard. The hydrophone assembly comprising the four elements **20–23** may be rotated about the two control axes forward-aft and port-starboard by reversible control motors, to be further discussed below.

Referring now to FIGURE 4, there is shown schematically the four receiving hydrophones **20–23** each having an electrical output circuit therefrom. The forward and aft hydrophones **23** and **21** are connected by electrical circuits **24** and **25** to the input of a synchonous switching circuit **26**. The port and starboard hydrophones **20** and **22** are connected by electrical circuits **27** and **30** to the input of a synchronous switching circuit **31**. The synchronous switching circuits **26** and **31** which may by way of example be of the vibratory contact type are energized from the 115 v. 60 c.p.s. shipboard power supply. The output of the synchronous switching circuit **26** is connected to the input of a conventional high frequency amplifier **32** and the output of the synchronous switching circuit **31** is connected to the input of a high frequency amplifier **33**. The function of the synchronous switching circuit **26**, shown in more detail in FIGURE 7, is to alternately connect the forward and aft hydrophones to the amplifier input at the 60 cycle rate to obtain synchronous lobe switching which will provide an output signal having a phase dependent upon which element of a pair of hydrophone elements is receiving the larger amplitude signal. The result is a phase sensitive system which will seek a signal null and which will have directional sense, thus providing proper stationing and indication. Similarly the function of the synchronous switching circuit **31** is to alternately connect the port and starboard hydrophones to the amplifier **33**.

The amplified output signal from the forward-aft amplifier **32** is detected by a signal detector **34** to eliminate the high frequency carrier leaving a 60 cycle square wave output from the detector. Similarly the amplified output signal from the port-starboard amplifier **33** is fed to a signal detector **35**.

A pair of signal-level meters **36** and **37** are connected to the signal detectors **34** and **35** to provide a continuous check on the general condition of the underwater sound source **15** and/or deterioration of either of the major control channels. The signal-level meters are also very important in the initial portion of the search when manual

tracking is in use to locate the sound source by indicating a detected signal, before switching the system to automatic tracking. AGC is obtained by feeding back some of the voltage developed by the detector 34, 35 to amplifiers 32, 33. This tends to keep the detector output constant while there is a signal and is necessary to prevent loss of directional sense due to the possibility of the amplifiers overloading under strong signal conditions.

The detected synchonously switched signals are connected from the output of detectors 34 and 35, respectively, to the signal input circuits of a pair of 60 cycle phase discriminating servo amplifiers 40 and 41. The servo amplifiers, which may be of the general type disclosed in the patent to Upton 2,423,534, are energized from the 115 volt 60 cycle shipboard power supply. The phase sensitive output of the forward-aft servo amplifier 40 is connected by an electrical circuit 42 to a two phase forward-aft hydrophone positioning motor 43 located within the soundome 16. Similarly the phase sensitive output of the port-starboard servo amplifier 41 is connected by an electrical circuit 44 to a two phase port-starboard hydrophone positioning motor 45 located within the soundome 16. The reference phase winding of the two phase motors 43 and 45 is supplied directly from the 115 volt 60 cycle shipboard power supply. Conventional phase shifting capacitors 46 and 47 are connected in the supply line to the reference phase windings.

Forward-aft motor 43 is mechanically coupled by a linkage 50 to rotate the entire hydrophone assembly of elements 20–23 about the port-starboard axis. Likewise port-starboard motor 45 is mechanically coupled by a linkage 51 to rotate the hydrophone assembly about the forward-aft axis. The mechanical linkages 50 and 51 may include a suitable gear train, not shown.

The forward-aft motor 43 is also mechanically coupled to drive a precision geared angular voltage readout potentiometer 52. Similarly the port-starboard motor 45 is mechanically coupled to drive a precision geared angular voltage readout potentiometer 53. The output voltages of the potentiometers 52 and 53 appearing on leads 54 and 55, respectively, will be proportional to the position of the hydrophone tracking head 20–23 at any instant since the potentiometers are directly geared to the tracking head gear train. This position information of the tracking head at any instant will be transmitted by the precision high linearity potentiometers through conductors 54 and 55 to the X–Y deflection axis of a CRT 56. The potentiometers 52 and 53 are supplied with a stabilized voltage from the 250 volt regulated power supply by conductors 60 and 61.

In considering the operation of the automatic tracking and position indicating system let it be assumed that the drill hole position has been previously determined and that the anchor block 13 and transmitting sound source 15 are in position on the ocean floor at or near the drill hole. Let it further be assumed that the oil drilling ship is in the process of relocating its position over the sound source 15 after having been moved for reasons of a severe storm or the like, and that the equipment operator utilizing manual search control of the listening hydrophones has found the sound source and locked on with automatic search. Referring to FIGURE 5 is can be seen that the ship is not located over the desired spot and that the hydrophone array within soundome 16 is directed forwardly from the ship toward the sound source.

When the central axis of the forward-aft hydrophone elements is aimed directly at the sound source the forward and aft hydrophone elements will receive equal amplitude signals. When these equal amplitude signals are chopped by the synchronous switching circuit 26 a substantially constant output will result therefrom, as shown by waveform A in FIGURE 8. Under this condition the phase discriminating servo amplifier 40 will receive no error signal, because the signal detector 34 will not have any AC output since the input to detector 34 is pure CW, and the position motor will remain stationary. When on the other hand the central axis of the forward-aft hydrophone elements is not directed at the sound source, one of the elements will receive a larger amplitude signal than the other. This is true because the receiving lobes are distributed in four quadrants and are displaced about the center line and are sufficiently down in amplitude at the center line to allow amplitude discrimination and directional sensing between paired quadrants, when they are not centered on the sound source. Assuming the receiving hydrophone array was positioned too far aft so that the forward hydrophone element 23 received a larger amplitude signal than aft hydrophone 21, the synchronous switching circuit provides an unbalanced output, shown in waveform B in FIGURE 8, which is fed as an error signal, after amplification and detection as shown in waveform D in FIGURE 8, to phase discriminating servo amplifier 40 in a phase direction to operate motor 43 in a direction to drive the hydrophone array forwardly. This operation continues until the hydrophone aray is repositioned far enough that the signals on forward and aft elements are again identical in magnitude thereby reaching null balance. Assuming the receiving hydrophone array was positioned too far forward so that forward hydrophone element 23 received a smaller amplitude signal then aft hydrophone element 21 the synchronous switching circuit provides an unbalanced output, shown in waveform C in FIGURE 8, with a phase opposite to that of waveform B. After amplification and detection this signal is fed as an error signal to the phase discriminating servo amplifier, as shown in waveform E in FIGURE 8, to drive the hydrophone array in an aft direction. This operation would continue, as in the last case, until the forward-aft signals were of equal magnitude. The port-starboard system operates in similar fashion.

As previously mentioned the position of the tracking head is transmitted by the potential on the precision potentiometers to the X–Y axis of the CRT 56 to produce a spot giving relative bearing, provide the operator with the feeling of looking straight down toward the bottom and the sound source. A set of cross hairs on the CRT 56 acts as a reference point.

FIGURE 6 shows the ship when properly relocated directly over the sound source 15 in which case the hydrophone assembly will be pointed straight down and the spot on the CRT 56 will be in the center of the tube to give a visual indication of correct position.

Since the lisenting hydrophone is locked onto the sound source the slow pitch and roll of the drilling ship will cause the spot on the CRT 56 to describe a line, ellipse, or a circle about its true position. The excursion of the spot will indicate the degree of pitch and roll.

System inaccuracies are reduced to a minimum by locating the sound source at the drill hole since sound energy transmitted vertically penetrates with little distortion or bending any existing thermoclines or scattering layers which might exist between the ocean floor and the point of observation on the surface.

Although the system has been explained as an indicating system it will be realized that the error signals may be applied to an external control circuit to control the ship positioning anchor winches. For example, referring to FIGURE 1, error signals from voltage readouts 52, 53 are present on terminals 206, 208 located on conductors 54, 55. The error signals are conducted along conductors 212, 204 from terminals 206, 208 to an external control circuit 200. The output of circuit 200 is applied to the ship positioning anchor winches 210 aboard ship 10, causing the winches 210 to shorten and lengthen the porper anchor cables 11 in order to keep ship 10 anchored substantially directly above source 15.

It will be understood that modifications may be made in the design and arrangements of the various portions

of my invention without departing from the spirit of my invention.

I claim:

1. Control apparatus for maintaining a marine vessel over a predetermined point on the floor of a body of water comprising, in combination: a source of compressional wave energy fixed at the predetermined point; a directive transducer mounted on the underside of the marine vessel, said transducer detecting the compressional wave energy from said source and producing first and second pairs of electrical signals, the first and second pairs of signals representing the lateral displacement of the vessel along horizontal, perpendicular axes from a point directly above the source; first and second means for modulating the first and second pairs of signals respectively; first and second amplifiers, amplifying the output of said first and second modulating means respectively; first and second detectors, demodulating the outputs of said first and second amplifiers respectively; first and second phase sensitive servo means, including amplifiers, energized by said first and second detectors respectively, said servo means mechanically connected to rotate said transducer about two perpendicular axes; first and second angular voltage readouts, mechanically driven by said first and second servo means respectively, said readouts producing displacement error voltages that are functions of the lateral displacements of said vessel from said source; and, means including a vessel positioning external control circuit responsive to said error signals whereby the vessel may be maintained in fixed space relationship with said source.

2. The combination according to claim 1 wherein said means for modulating the first and second pairs of signals produced by said transducer comprises first and second synchronous switches.

References Cited in the file of this patent

UNITED STATES PATENTS

1,470,389	Rellstab	Oct. 9, 1923
2,279,246	Podliasky et al.	Apr. 7, 1942
2,414,695	Massa	Jan. 21, 1947
2,422,446	Stuart	June 17, 1947
2,432,625	Klein	Dec. 16, 1947
2,438,526	Waterman	Mar. 30, 1948
2,462,456	Bedford	Feb. 22, 1949
2,504,118	Evans	Apr. 18, 1950
2,545,179	Voorhees	Mar. 13, 1951
2,929,056	Page	Mar. 16, 1960

OTHER REFERENCES

"Ultrasonic Tracer Follows Tagged Fish," by Trefethen et al., Electronics, vol. 30, No. 4, Apr. 1, 1957, pp. 156–160 relied on.