(12) UK Patent Application (19) GB (11) 2 106 411 A

(21) Application No **8223393**
(22) Date of filing **13 Aug 1982**
(30) Priority data
(31) **8125002**
(32) **15 Aug 1981**
(33) **United Kingdom (GB)**
(43) Application published **13 Apr 1983**
(51) **INT CL³ B01D 23/00**
(52) Domestic classification **B1D** 1108 1111 1203 1505 1513 1804 1816 1819 1821 2101 2103 2301 AB **U1S** 1262 1263 1440 B1D
(56) Documents cited
GB 1430063
GB 1338761
GB 1037102
GB 0824629
GB 0761297
GB 0838164
GB 0499031
(58) Field of search **B1D**
(71) Applicants
Derek Parnaby Cyclones International Limited (Great Britain), Chilton Industrial Estate, Ferryhill, Co. Durham
(72) Inventor
Derek Parnaby
(74) Agents
W. Reid Sharpe and Co., 24 Portland Terrace, Newcastle upon Tyne NE2 1QS

(54) **Dewatering screen**

(57) A dewatering screen comprises a foraminous curved screen 3 of mesh or rod construction, vibrated by a pair of magnetic or rotating vibrators 10, the screen 3 being mounted on its upper end pivotally on a shaft 13 and at its lower end on spring assembly 12. A collecting tank 5 is disposed below the screen and an outflow 9 leads to a settling tank (Fig. 4). The screen may be located to accept an intermediate density output from a twin chamber cyclone separator, material retained by the screen being passed to a reciprocating flat screen over the settling tank, and the coarse fraction from the separator being fed onto a further flat bed screen over another settling tank 31. The vibrators 10 may be variable in inclination with respect to screen 3.

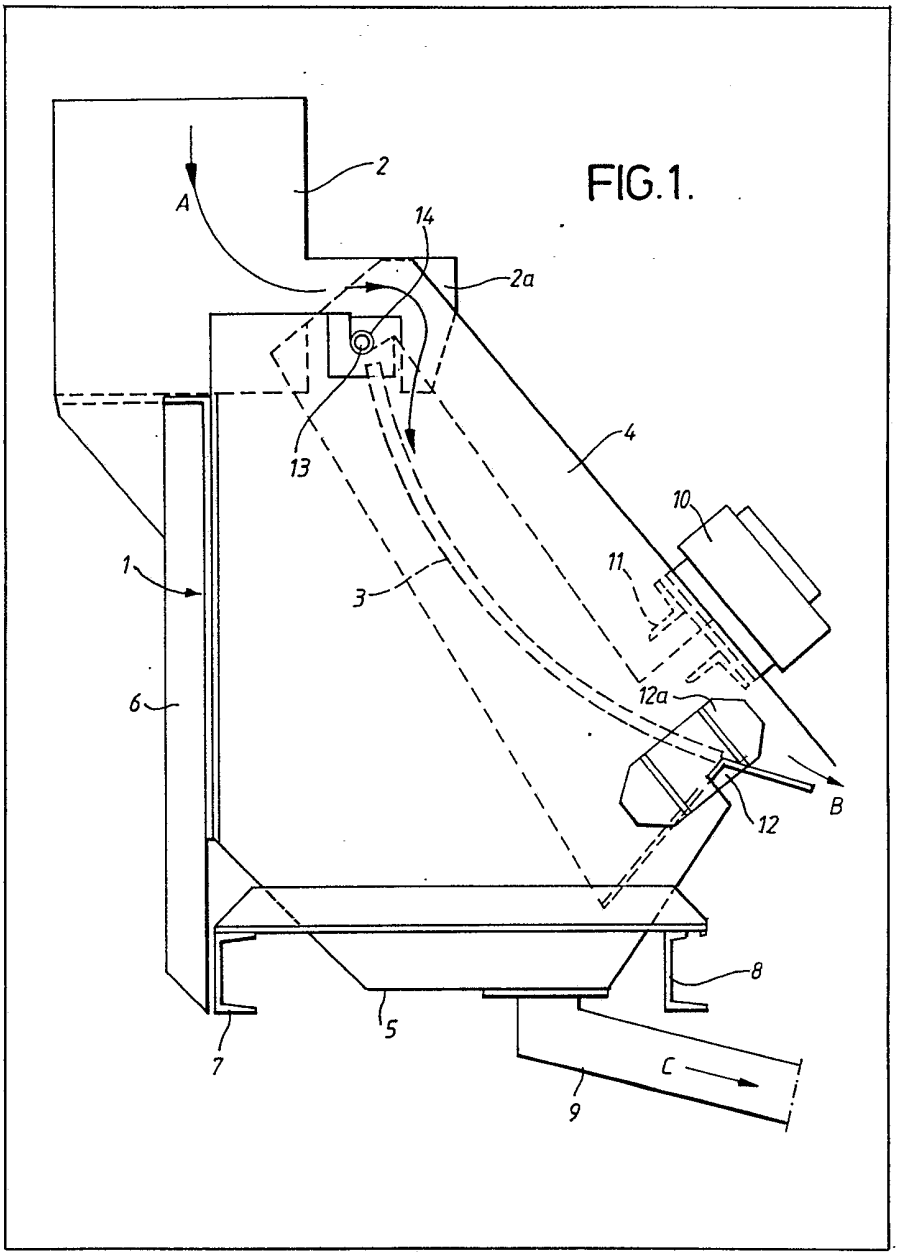

FIG.1.

GB 2 106 411 A

FIG.1.

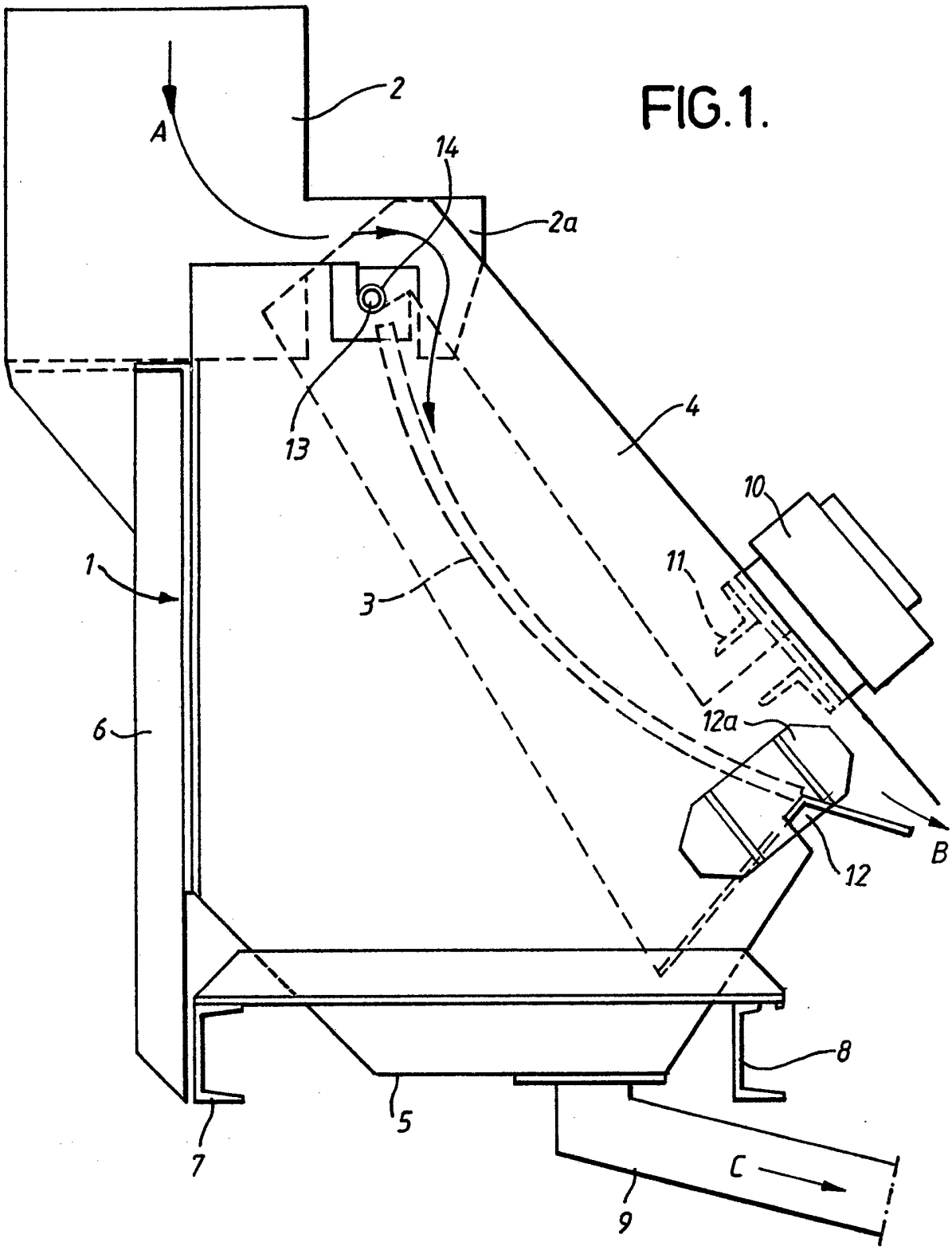

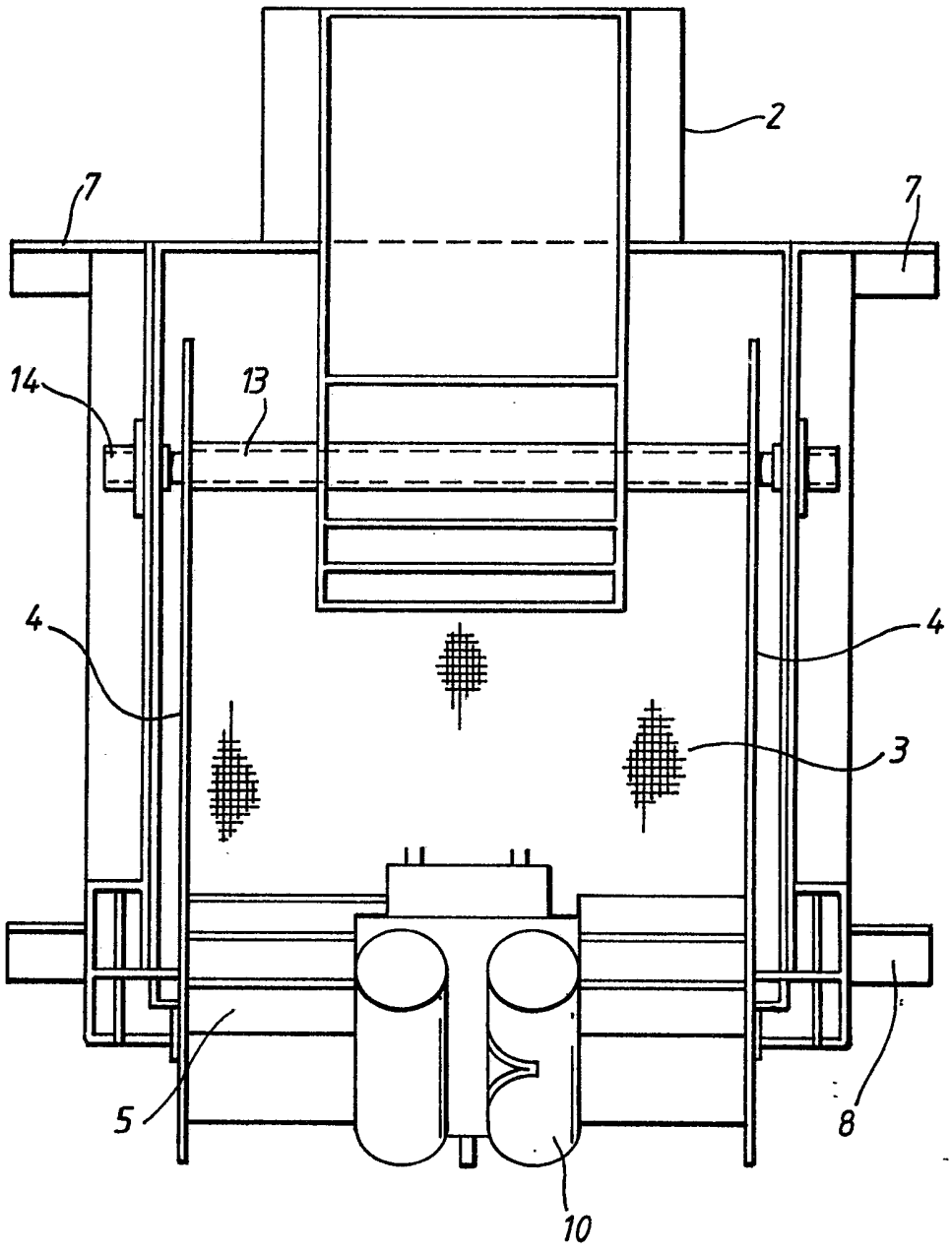

FIG.2.

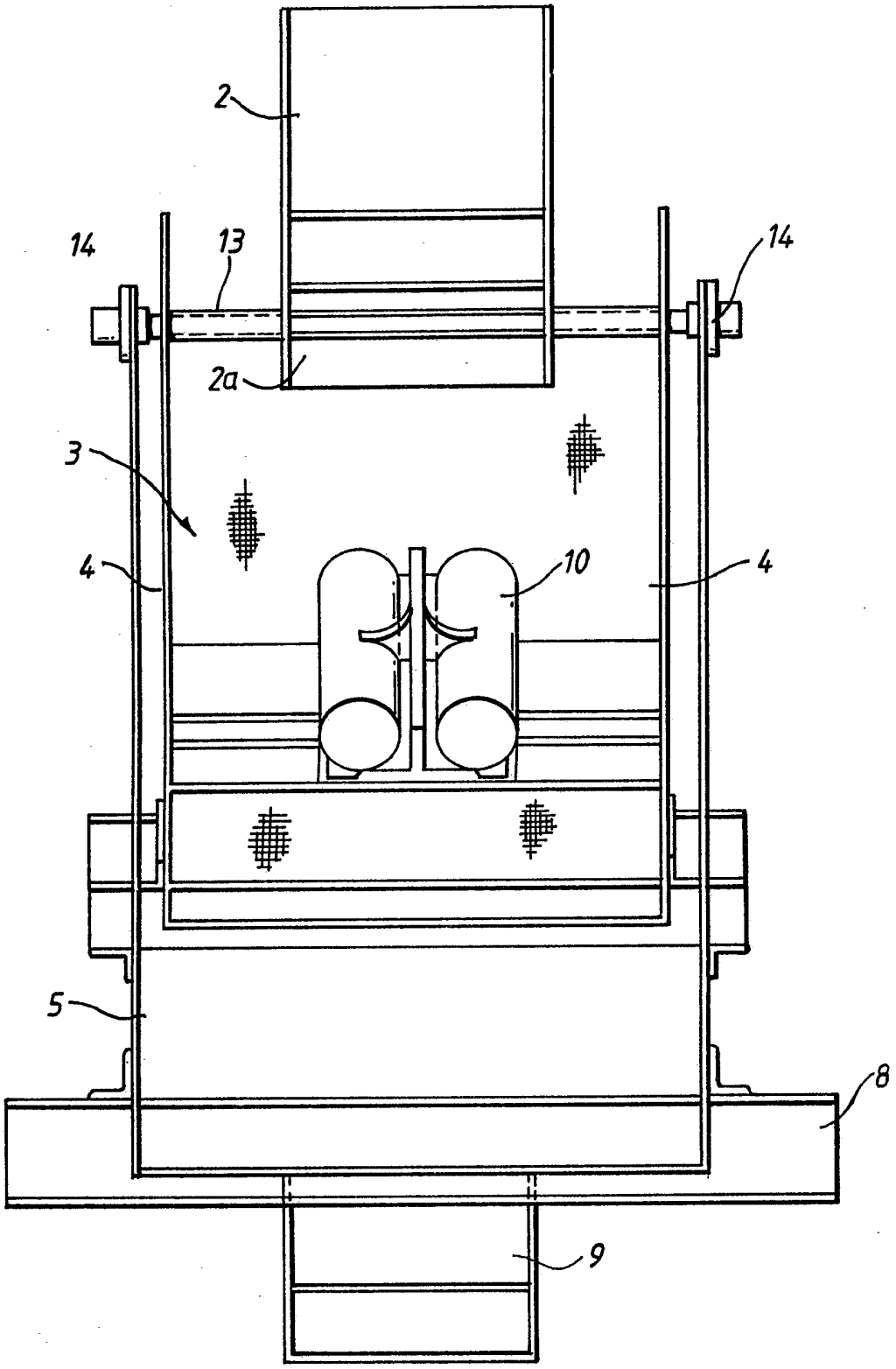

FIG.3.

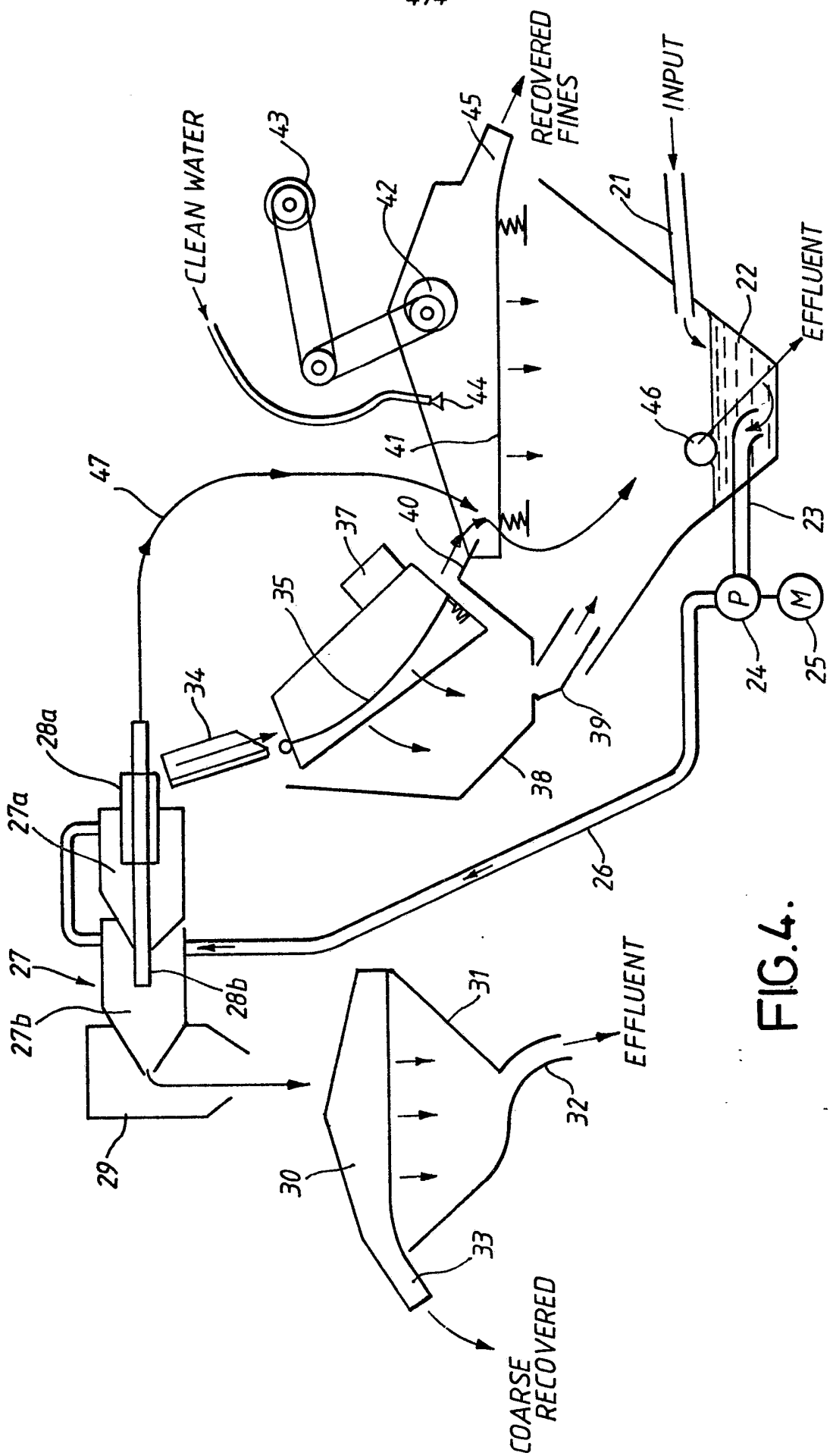
CLEAN WATER
RECOVERED FINES
INPUT
EFFLUENT
EFFLUENT
COARSE RECOVERED
P
M
21
22
23
24
25
26
27
27a
27b
28a
28b
29
30
31
32
33
34
35
37
38
39
40
41
42
43
44
45
46
47

FIG.4.

SPECIFICATION

Vibrating dewatering screen

This invention relates to a vibrating dewatering screen such as a rundown filtering screen and fines recovery plant incorporating such a screen.

Cyclone separator apparatuses are used to separate coarse or light fractions from fine or dense fractions, for example in sorting coal or coke lumps from dust, or other particulate materials. In sorting coal lumps from dust, since finely divided coal material or "dust" is suitable for use in fluidised bed furnaces for example, this part of material is worth recovering if the same can be done economically. In other fields, such as the preparation of china clay for use, the desired product is a very fine powder whilst coarser particles and aggregates require recycling to be broken up further. In order to be used, however the fines must be recovered from the usually aqueous suspension in which they leave the cyclone separator.

Coarser particles can be relatively easily dewatered since these are not generally in suspension, and are not usually hydraulically bound by surface tension of water into larger aggregates. A simple sieve arrangement can suffice to dewater such particles, and the particles dried by exposure to natural or artificial drying means. Dewatering of fine suspended particles is more difficult, and the fine mesh sizes of screens necessary to retain the particles are prone to be blocked by water retained in the mesh by surface tension. Surface tension also binds particles into larger aggregates with a considerable amount of water included by capillary action.

In using the screen, water containing fines is run down over the screen which is for example inclined or curved, the water running through the screen, and particles above a given dimension discharged after running from the bottom of the screen.

It is known to agitate flat bed separating screens, such as for example by reciprocating winnowing screens in agricultural harvesters or screens in flat bed paper making machines but it has been considered that inclined screens such as used for dewatering cyclone fines do not require agitation, by virtue of their inclination. Surface tension of liquid however causes particles to aggregate with a considerable quantity of water bound up in linking the particles.

An object of the invention is to provide a dewatering screen which will enable this effect to be prevented, with attendant improvement in the efficiency of dewatering and reduction of the occurrence of aggregations of particles which may include particles which would otherwise be rejected by the screens.

In accordance with the invention, a dewatering screen has a mesh or parallel wire screen part which is generally inclined, and is provided with means for vibrating the screen. Such vibration of the screen serves to break the surface tension of water thus breaking up any aggregations of particles which may form so that water which might otherwise be included in such aggregates beyond the minimal quantity wetting the individual particles is removed.

The means for vibrating the screen may comprise a pair of electro-magnetic vibrators, operating by rapid field reversal or on/off switching to produce rapid vibration of an armature mechanically connected to a part of the screen, or alternatively comprise a pair of out of balance rotating shafts. These shafts would be unbalanced by weighting the shafts or a flywheel to one side so that a lurch will occur with each rotation of the shaft. The shafts preferably are weighted and rotate in synchronism, so that they reinforce rather than cancel each other. The screen, being inclined has an upper end, and this upper end may be pivotally mounted on a horizontally extending shaft which permits pivoting rotation of the screen. The shaft may be provided with friction absorbing sleeves over the pivot mounting at each side of the screen.

The screen itself may be curved, the upper end being the steeper, and the screen curving to a smaller inclination at the lower end and presenting a concave surface to material flowing onto the screen. The screen may be provided with a resilient support at the lower end, comprising for example an assembly of compression springs, carrying the lower end of the screen by a block of resilient material such as rubber between the screen edge and the springs. Preferably, a water collecting structure is provided below the screen for collecting water, and any rejected particles having an outflow conduit leading to a settling tank or other discharge point. An overflow chute is associated with the lower end of the screen for discharge of retained particles for example onto a belt leading to a further treatment or storage stage.

The screen itself is formed of parallel wires, or mesh and may for example be designed to retain particles in the range from below 0.25 mm towards zero.

The further screen means may each be a flat reciprocating screen, located directly above the settling tank, so that any further liquor and particles rejected by the screen fall directly into the tank. The inlet for unsorted material may be located somewhat above an outlet for effluent liquor which defines a generally maintained level for liquor in the settling tank.

The spigot (coarse or low density) output of a cyclone or cyclones or two chamber cyclone may be fed onto a reciprocating, or stationary, horizontal flat screen, with a collecting tank below with a connection to effluent. The liquor drained through the screen should have no significant inclusions of fine particles due to the efficiency of cyclone operation, but the effluent can be directed to the settling tank if it is believed that a valuable quantity of fines can be recovered in this way. An intermediate density output may be fed to the dewatering screen, and a higher density output direct to the settling tank.

A preferred embodiment of dewatering screen according to the invention will now be described by way of example, with reference to the accompanying drawing; wherein:

Fig. 1 is a side view of a dewatering screen according to the invention;

Fig. 2 is a view of the screen from above;

Fig. 3 is a frontal view of the screen; and

Fig. 4 is a flow diagram of a fines separating apparatus incorporating the dewatering screen.

As shown in the drawings, a dewatering screen 1 comprises an inlet, feed chute, or header box 2, which receives outflow of fines and water from a cyclone separator, or barrel-type separating apparatus. The flow proceeds along arrow A through orifice 2*a* onto a curved inclined screen 3. The curvature of screen 3 presents its concave face to flow of material to be screened, and the inclination of the screen decreases towards the bottom of the screen, the upper end of the screen approaching vertical, and the lower end approaching horizontal. The screen 3 is fenced at each side by walls 4 which prevent spillage over the lateral edges of the screen. A frusto-conical tank 5 is disposed below the screen 3 to collect water passing through the screen, and the tank 5 has an outlet duct 9 which may be connected to a settling tank or other storage or disposal point. The screen 3 and tank 5 are supported by a framework consisting of rear vertical members 6, and front 8 and rear beams 7.

A vibrator unit 10, comprising two axially parallel vibrators is mounted on beams 11 extending between the walls 4 so as to communicate vibrations from the unit 10 to the screen 3. Each vibrator composing the unit 10 may be an electro-magnet which either by on-off switching, or pole reversal causes an armature to reciprocate rapidly, e.g. with a frequency in the order of 10 cycles per second (10 Hz). Alternatively each vibrator may comprise an electric motor driving an eccentrically loaded shaft or flywheel which causes "knocking" of the shaft, or the shaft may be cranked or carry a cam. The vibrators forming the unit 10 preferably are synchronised, so that they reinforce each other. The unit may be variable in inclination to the screen 3, so that particle trajectories can be varied to help obtain desired separation effect.

The screen 3 is supported at the bottom by a pair of spring assemblies 12 comprising compression springs, with the screen mounted thereon through rubber pads 12a. This serves to provide a resilient mounting and minimise the transmission of vibration to the frame of the screen.

The upper end of screen 3 is pivotally mounted on a horizontally extending shaft 13, which is provided with friction absorbing sleeves 14 of for example rubber over the shaft at the pivot mounting for the screen toward each end of the shaft 13.

In use (see Fig. 4) the "fines" output of a cyclone separator for example is fed into the header box 2, following arrow A, and cascades through orifice 2*a* onto the screen 3 which is caused to vibrate continuously by the vibrator unit 10. Without vibration, the bulk of water would flow through the mesh of the screen together with particles too small to be retained by the screen, and the bulk of the particles, together with wetting water clinging to the particles by surface tension would be retained by the screen. The surface tension of the water wetting the particles however not only retains water thus, but also causes the particles to aggregate and form larger water bound masses which retain water by capillary action, and thus the unvibrated mass of retained particles on the screen would contain a considerable quantity of water, greater than required to wet all the particles present. Lack of vibration also causes the mesh of the screen to be clogged with water at mesh sizes in the order of 1/1000th inch (0.0254 mm) or less.

Vibration causes particle aggregates to break up and shed water which might be bound in the aggregates, and also dislodges any water which might clog the mesh of the screen due to surface tension. Continuous vibration of the screen therefore much increases the efficiency of dewatering and enables very fine mesh screens to be used for separating very fine suspensions from water such as ash, potters clay or silt.

The water and rejected particles pass through the screen 3 and fall into the tank 5, and are fed following arrow C to a settling tank or other disposal or storage location. The retained particles move down the screen 3 under the influence of the vibration and are discharged from the lower end of the screen following arrow B, for example onto a belt conveyor to be taken to a location for further processing — e.g. by drying, or for storage or disposal.

The screen 3 may be of mesh comprising intersecting wires, or a grid of parallel wires with separations which enable retention of particles with diameters of fractions of a thousandth of an inch and may be constructed to the limit of ability to construct fine mesh screens.

As shown in Fig. 4, unsorted input material is introduced to the apparatus through feed pipe 21 opening into settling tank 22, where the material settles through a pond of liquor. Any buoyant or scum-forming material is floated off on the surface of the pond. The material is extracted with liquor through a syphon 23, by pump 24 powered by motor 25 and fed via pipe 26 to a tangential inlet of a twin chamber cyclone separator 27. The cyclone separator 27 operates in known manner, with the particle size or density separation criterion being adjustable by a first vortex finder 28, for removal of an intermediate density fraction or by other means such as a valve to vary back pressure in the separator, or a spear valve in the conical end of the separator. Coarser material separated in the vortex is discharged from the conical end of the first chamber 27*a* of separator 27 into a second chamber 27*b* with a second vortex finder 28*b* which removes a heavy fraction, and the remaining material enters a spigot box 29

and then drops onto a dewatering screen 30. Liquor drained from the materia collects in a funnel shaped trap 31, and then is fed to effluent by conduit 32. Conduit 32 may be fed to the settling tank 22 if it is considered or found that significant quantities of fines particles are included in the liquor passed through screen 30. The coarse material is then fed via chute 33 to a coarse material recovery point, where it is gathered for transport, disposal processing or reprocessing as appropriate. The dense fraction falls directly into settling tank 22 via line 47.

The intermediate fraction is discharged from the vortex finder tube 8 into a chute 34 and thence cascades over an inclined vibratory dewatering screen 35. This is constructed in accordance with Figs. 1 to 3 above, and comprises a close mesh screen designed to retain particles of 0.25 mm or less in diameter, pivoted at 36 and vibrated by vibrator unit 37 to prevent aggregation of particles and clogging of the mesh by water due to surface tension. The liquor and any suspended particles passing through screen 35 is caught in a generally frusto-conical collecting trap 38 and fed by conduit 39 to the settling tank 22, where any suspended particles are allowed to settle out of the liquor.

The retained particles are fed via chute 40 onto a horizontal flat vibratory dewatering screen 4, which is vibrated by an eccentric 42 driven by pulleys from motor 43. On screen 41, the particles are subjected to washing by clean water via spray nozzles 44, the water and any rejected particles passing through the screen into the settling tank 22. The vibration of the screen 41 again prevents clogging of the very fine mesh required to retain the fines particles by water through surface tension. The washed fines particles are finally discharged from the end of the screen 41 via chute 45 to be collected for further use.

The top of the liquor in settling tank 22 is drained off via conduit 46 for disposal as effluent, with any scum or floating debris, but without any substantialy contamination by suspended fines particles.

The apparatus described is for example of utility in separating coal dust which is suitable for use in fluidised bed furnaces, from coal gravel which is more suitable for burning in other types of furnace. The apparatus can also be used for minerals separation where either both fractions are of value, or where the valuable fraction is the high density/fine fraction and for separating material which has been properly powdered and thus suitable for use in the next stage of a process from material which has not been so powdered, and needs to be returned for correct processing.

CLAIMS

1. A dewatering screen having a generally inclined concavely curved foraminous screen part, and screen vibrating means for vibrating the screen.

2. A dewatering screen according to claim 1 wherein the screen vibrating means comprises a pair of magnetic vibrators each comprising a coil and an armature said armature being connected by mechanical means to said screen, and said coils having associated switch means to effect field reversal, or switch said coils on and off in rapid sequence.

3. A dewatering screen according to claim 1 wherein said screen vibrating means comprise a pair of out of balance rotating shafts, said shafts being made off balance by being weighted eccentrically to one side, the weights on the shafts being arranged so that the vibrations produced by each shaft are in synchronism with the vibrations produced by the other shaft.

4. A dewatering screen according to claim 1 or 2 wherein said screen has an upper end pivotally mounted on a horizontally extending shaft which permits pivoting rotation of the screen.

5. A dewatering screen according to any preceding claim, wherein said screen is curved, presenting a concave surface to material flowing onto said screen, said upper end in positions of use having a greater angle of inclination to horizontal than said lower end.

6. A dewatering screen according to claim 4 wherein said screen is provided with a resilient support at said lower end comprising an assembly of compression springs carrying said lower end of the screen on a block of resilient material between said lower end and said springs.

7. A dewatering screen according to claim 5 wherein a water collecting structure is provided below the screen for collecting water.

8. A dewatering screen according to any preceding claim formed of parallel wires or mesh and designed to return particles in the range from below 0.25 mm towards zero.

9. Apparatus for recovery of particulate matter from suspension comprising a generally inclined foraminous dewatering screen according to any preceding claim, means for vibrating said screen, a water collecting structure below said screen and an outflow conduit from said water collecting structure leading to a settling tank, and an overflow chute leading from a lower end of said screen for discharge of retained particles onto conveyor means.

10. Apparatus according to claim 9 comprising further screen means in the form of one or more flat reciprocating screens located directly above the settling tank so that liquor and particles passing through the screen fall directly into the tank through the further screen means.

11. Apparatus according to claim 9 wherein an intermediate output from a twin cyclone separator is fed onto said inclined screen, and the coarse output is fed to a horizontal flat screen with a collecting tank therebelow and the dense output to a settling tank below the inclined screen.

12. A dewatering screen, substantially as hereinbefore described with reference to and as illustrated in Figs. 1 to 3 of the accompanying drawings.

13. Apparatus for recovery of particulate matter from suspension substantially as hereinbefore

described, with reference to and as illustrated in Fig. 4 of the accompanying drawings or including a screen according to claim 12.

New claims or amendments to claims filed on 16/11/82.

Superseded claims 1, 4.

New or amended claims:— 1. Other claims and their appendencies renumbered.

1. A dewatering screen having a generally inclined concavely curved foraminous screen part, and screen vibrating means for vibrating the screen said screen having an upper end pivotally mounted on a horizontally extending shaft which permits pivoting rotation of the screen in vibration.

Printed for Her Majesty's Stationery Office by the Courier Press, Leamington Spa, 1983. Published by the Patent Office 25 Southampton Buildings, London, WC2A 1AY, from which copies may be obtained.