June 29, 1943. F. B. YINGLING 2,322,961

TWO-CYCLE ENGINE

Filed Nov. 5, 1941 7 Sheets-Sheet 1

FIG. 1

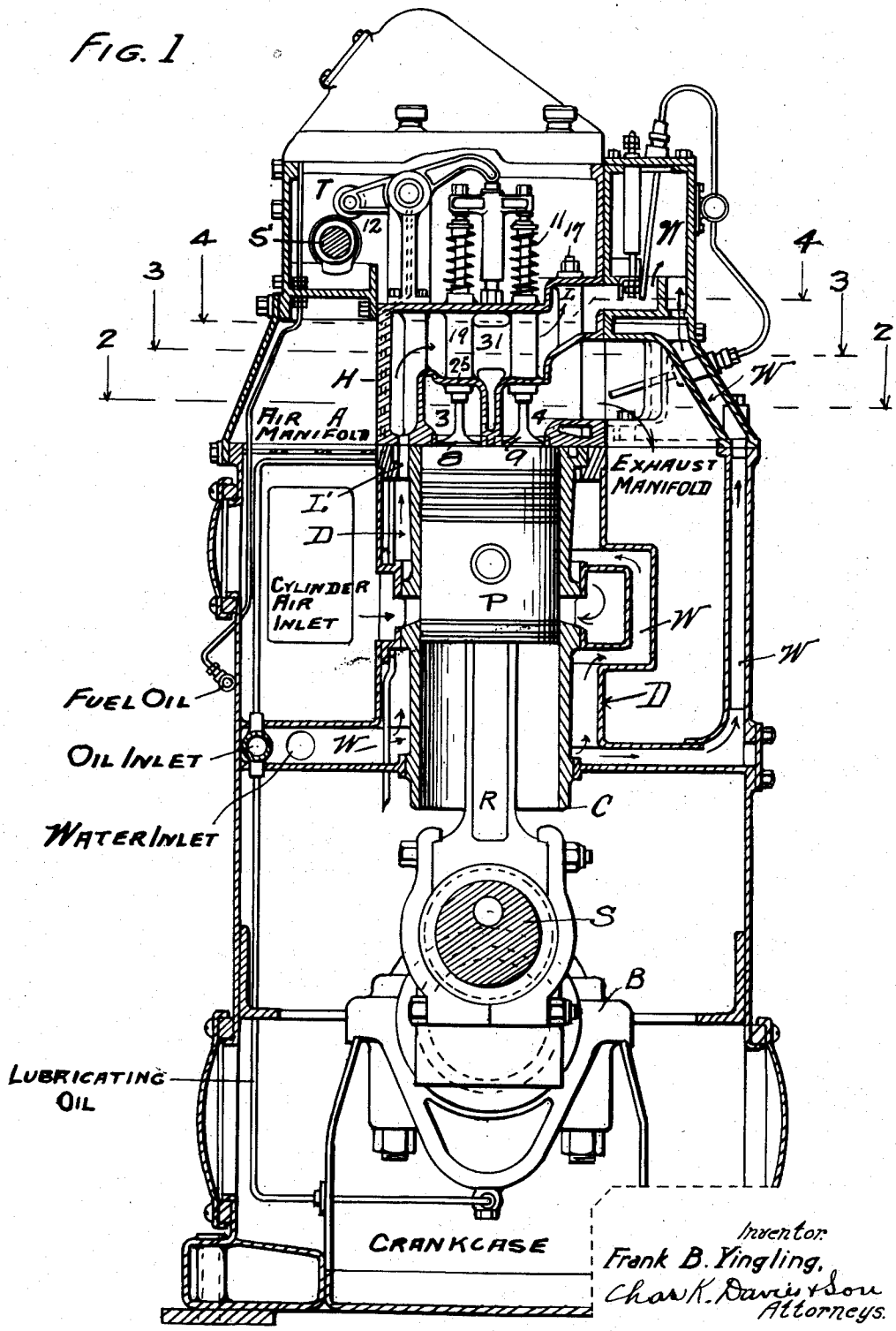

Inventor:
Frank B. Yingling,
Chas K. Davis & Son
Attorneys.

June 29, 1943. F. B. YINGLING 2,322,961

TWO-CYCLE ENGINE

Filed Nov. 5, 1941 7 Sheets-Sheet 2

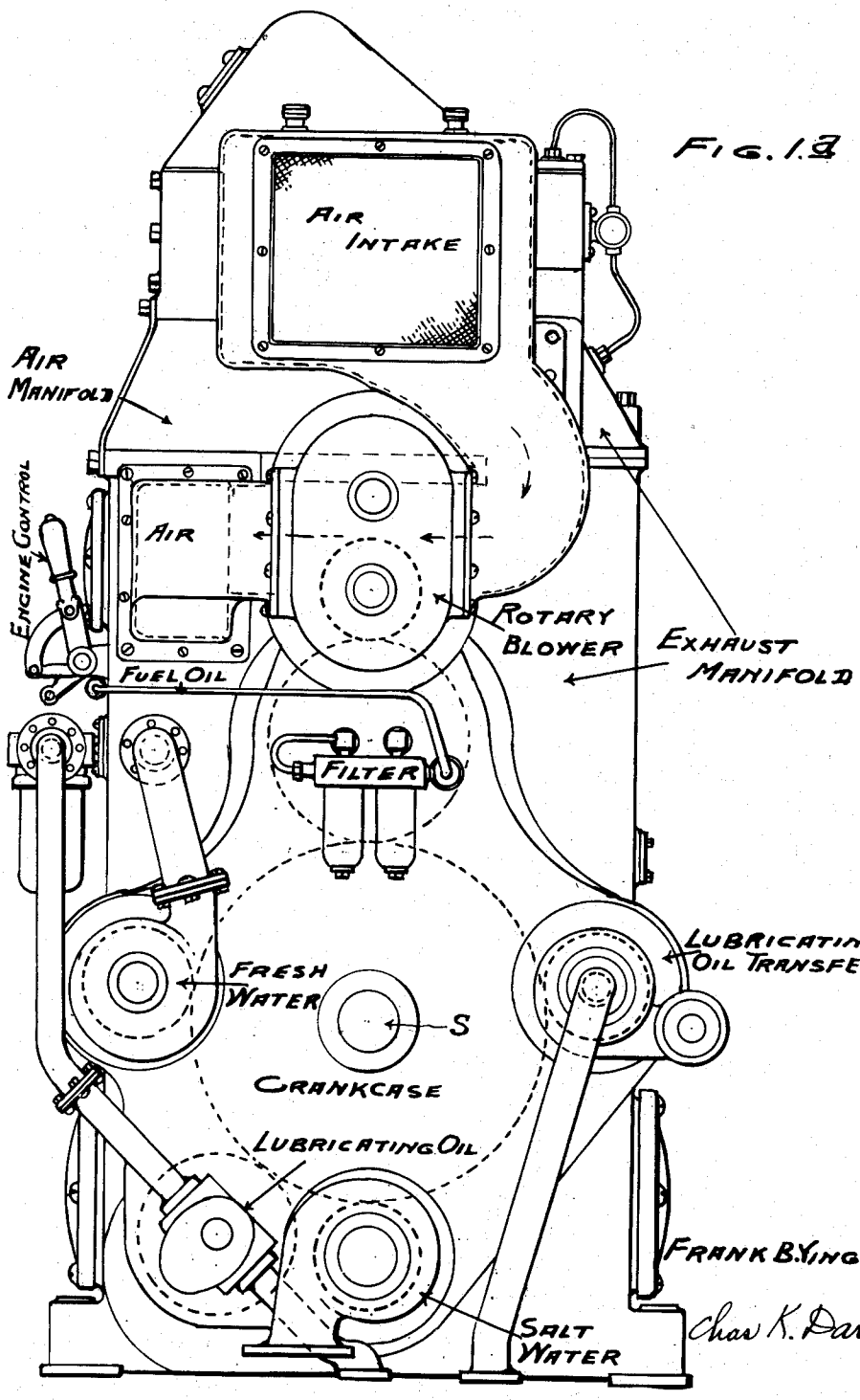

FIG. 1.

Inventor
FRANK B. YINGLING

Chas K. Davies & Son
Attorneys

June 29, 1943. F. B. YINGLING 2,322,961

TWO-CYCLE ENGINE

Filed Nov. 5, 1941 7 Sheets-Sheet 3

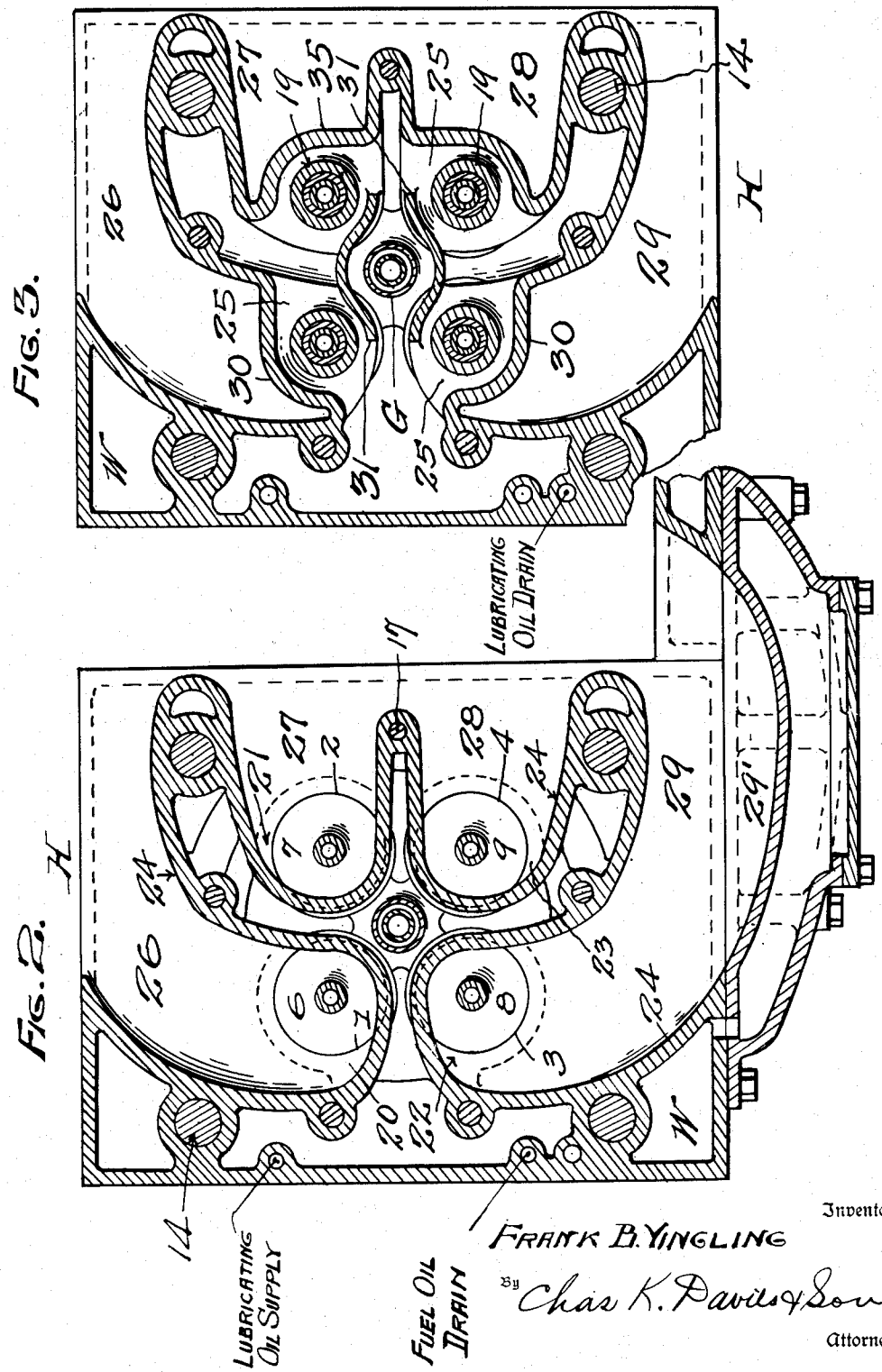

Inventor

FRANK B. YINGLING

By Chas K. Davis & Son

Attorney

June 29, 1943. F. B. YINGLING 2,322,961

TWO-CYCLE ENGINE

Filed Nov. 5, 1941 7 Sheets-Sheet 4

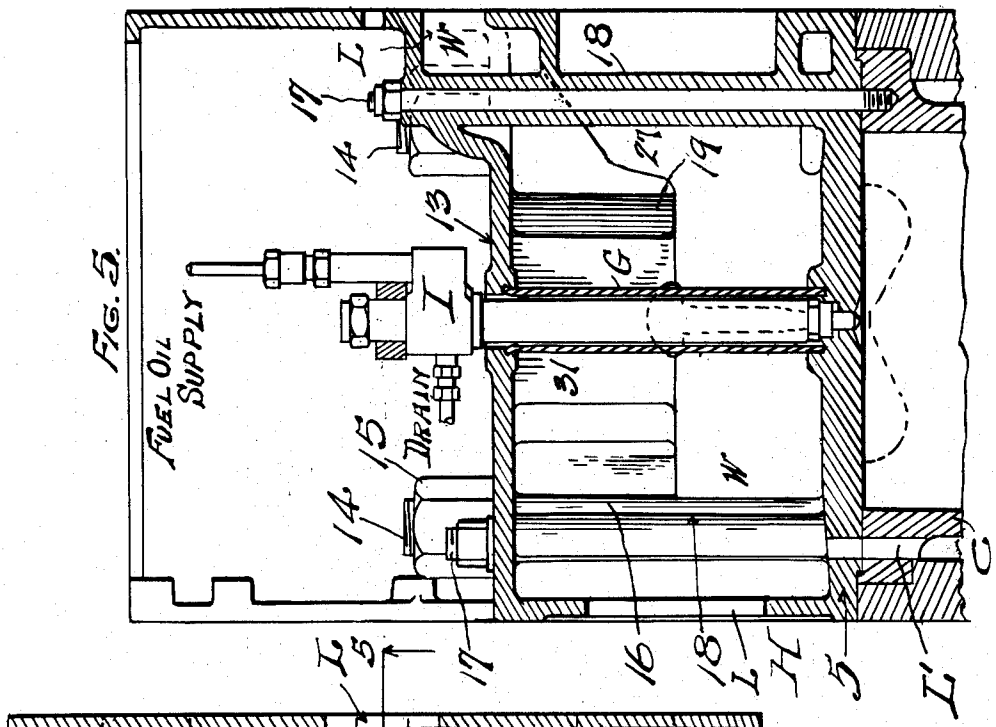

FIG. 5.

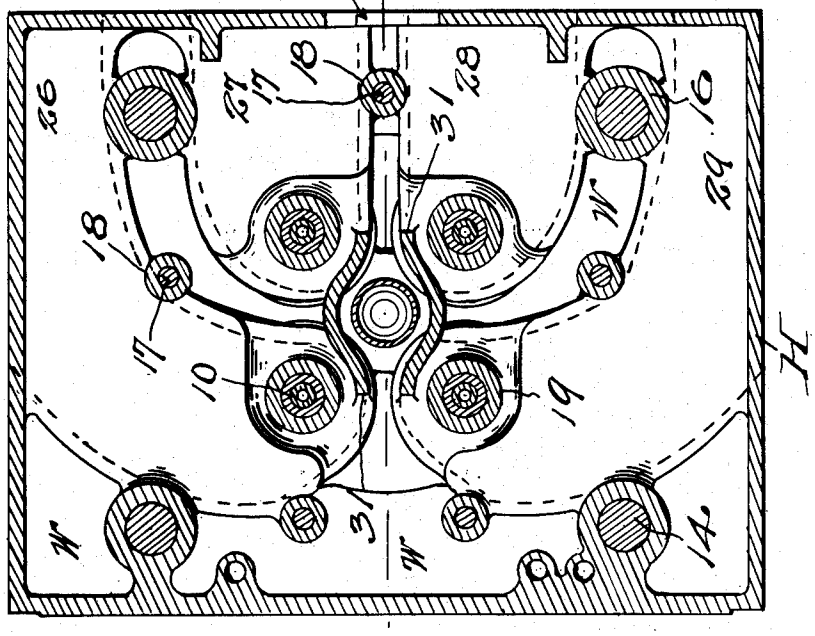

FIG. 4.

Inventor

FRANK B. YINGLING

By

Chas K. Davies & Son

Attorneys.

June 29, 1943. F. B. YINGLING 2,322,961

TWO-CYCLE ENGINE

Filed Nov. 5, 1941 7 Sheets-Sheet 5

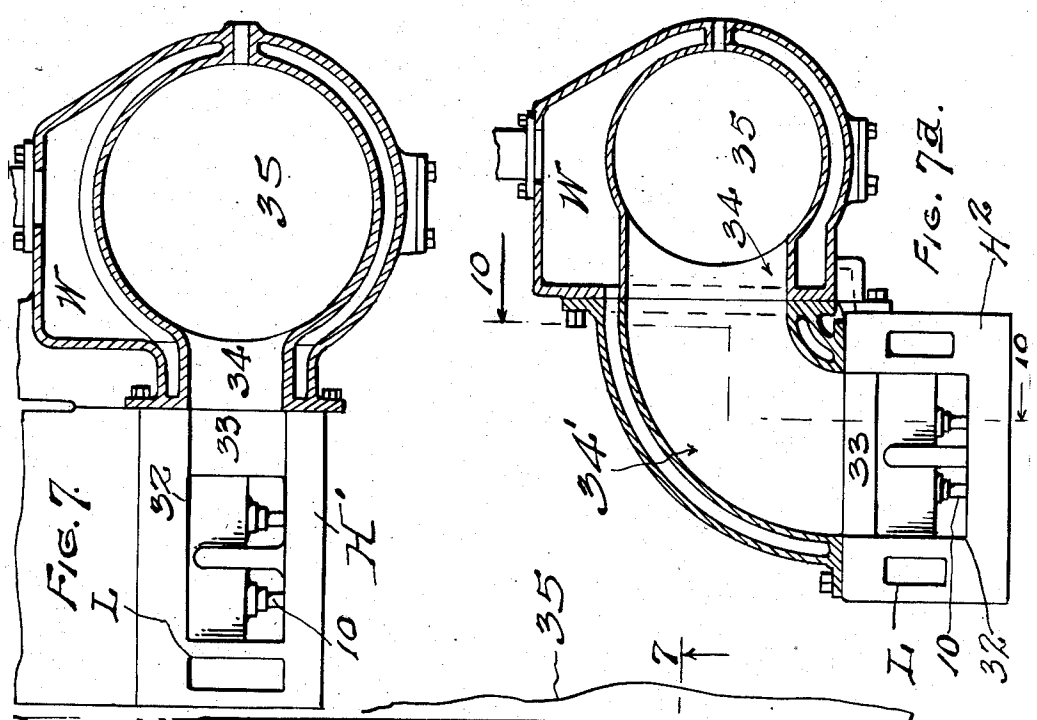

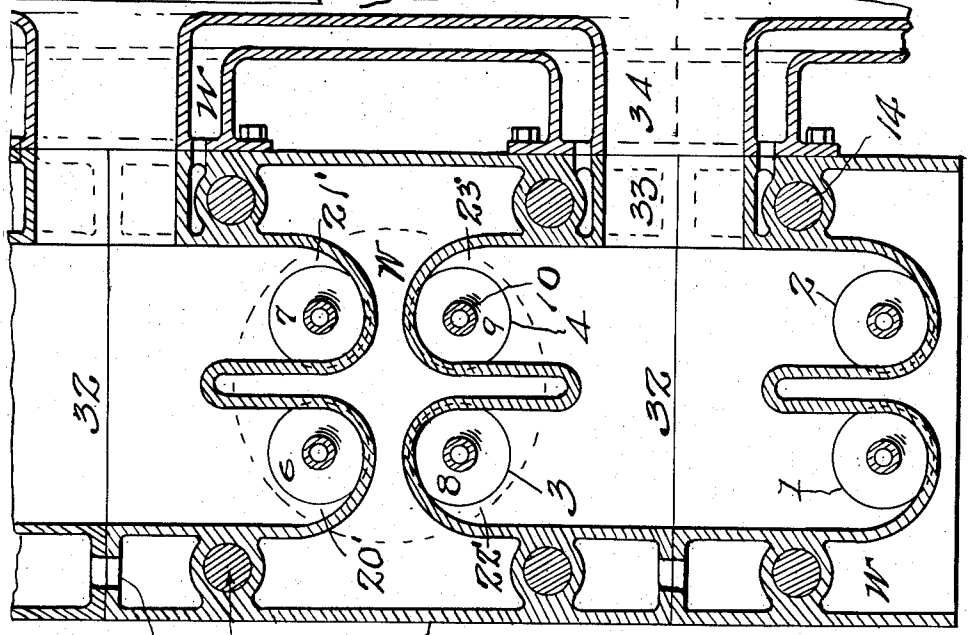

Inventor

FRANK B. YINGLING

By Chas K. Davies & Son

Attorney

June 29, 1943. F. B. YINGLING 2,322,961

TWO-CYCLE ENGINE

Filed Nov. 5, 1941 7 Sheets-Sheet 6

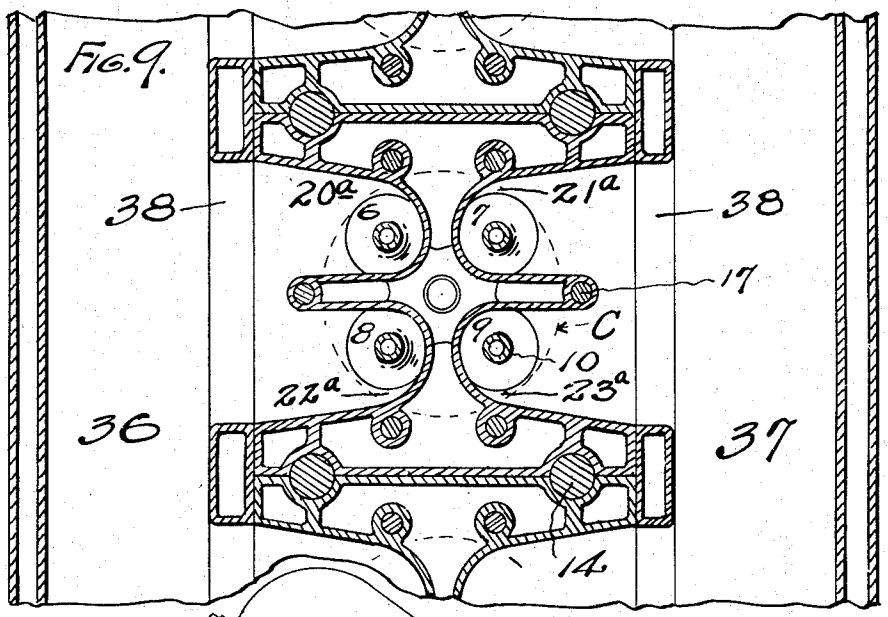

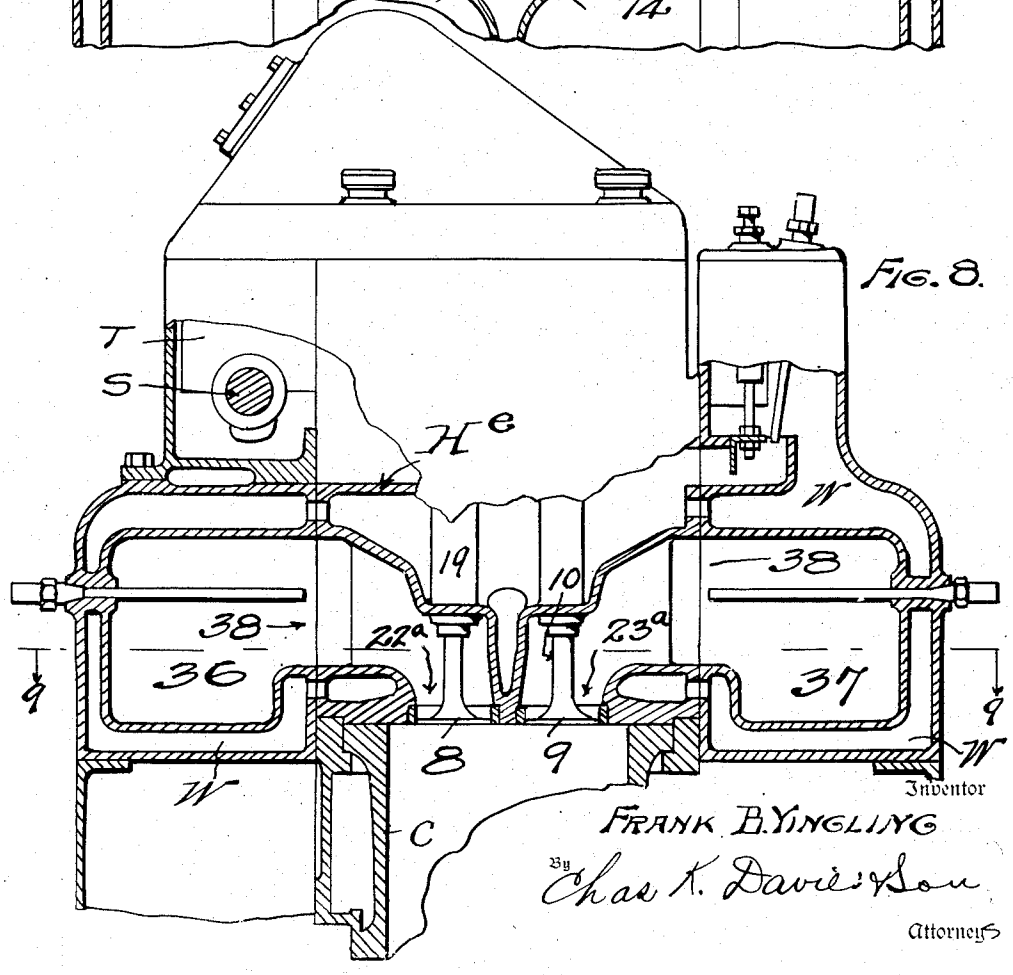

Inventor

FRANK B. YINGLING

By Chas. K. Davis & Son

Attorneys

June 29, 1943. F. B. YINGLING 2,322,961

TWO-CYCLE ENGINE

Filed Nov. 5, 1941 7 Sheets-Sheet 7

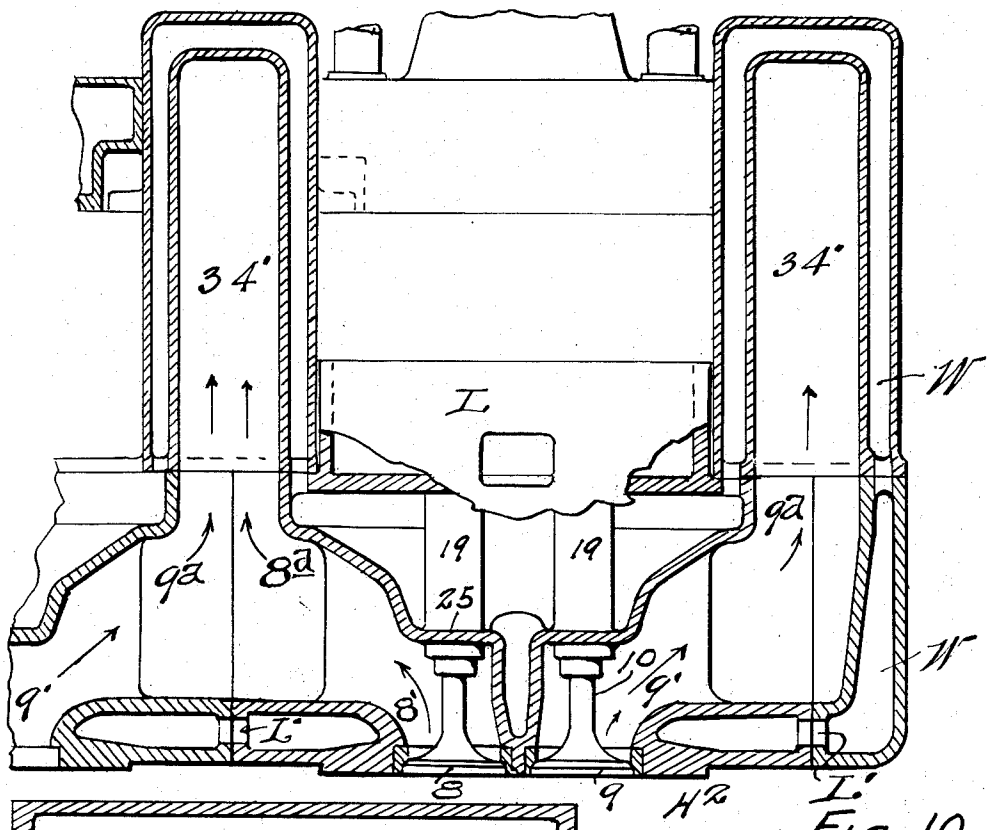

FIG. 10.

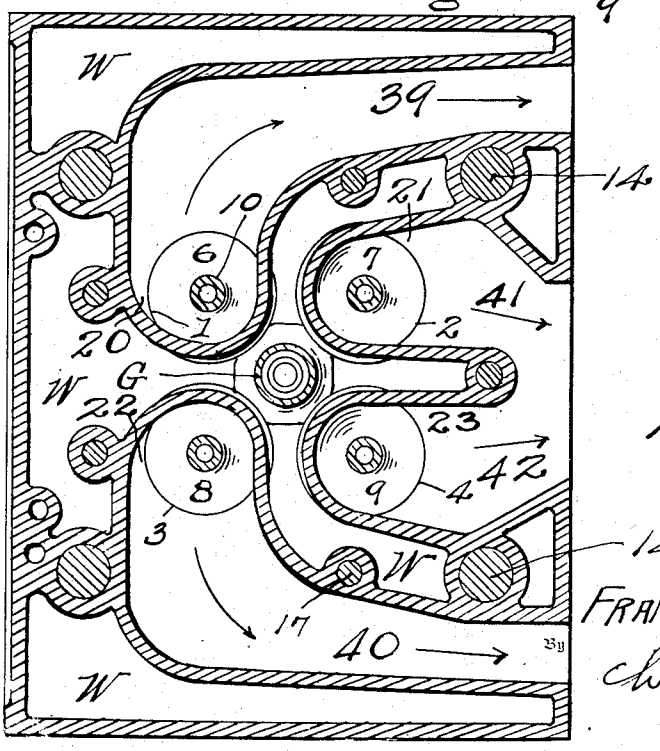

FIG. 11.

Inventor

FRANK B. YINGLING

By Chas K. Davies & Son

Attorneys

Patented June 29, 1943 2,322,961

UNITED STATES PATENT OFFICE

2,322,961

TWO-CYCLE ENGINE

Frank B. Yingling, Hamilton, Ohio

Application November 5, 1941, Serial No. 417,948

15 Claims. (Cl. 123—65)

My present invention relates to improvements in two-cycle engines of the compression-ignition internal combustion type in which the overhead exhaust valves are mounted in the engine head, and the exhaust valves and ports are located directly over the multi-cylinders of the engine. The engine head is fashioned in sections or exhaust-headers that are longitudinally alined over the complementary multi-cylinders of the engine, and the exhaust gas from the several cylinders is conveyed in separated currents through these exhaust headers and thence disposed of through one or more exhaust manifolds.

In carrying out my invention I utilize a unitary engine housing or cylinder block inclosing the "in line" cylinders and a removable exhaust-header is mounted on the unitary housing over each of the engine cylinders. The lower portion of the unitary housing is fashioned as a crank case in which are supported the main journal bearings for the crank shaft of the engine, which shaft of course extends the full length of the engine. In addition to the crank case at the bottom of the housing the latter also includes a central elevated longitudinally extending water compartment in which the spaced cylinders are located, and air, oil, and exhaust manifolds are related to the unitary housing to insure the proper supply and circulation of lubricating and fuel oil, fuel air and scavenging air, cooling water, and exhaust gases.

My invention is embodied in that type of two cycle internal combustion engine which utilizes a plurality or group of exhaust ports for each cylinder, which ports in groups are disposed directly above a cylinder to insure a maximum exhaust area and consequent free and unrestricted flow of gas and scavenging air from each cylinder. These exhaust ports, of course, are controlled by a complementary number of overhead valves that are assembled for operation in the exhaust header or removable portion of a unitary housing. The cylinders are thoroughly cleared of exhaust gas and recharged with fresh air by the uniflow system whereby scavenging and charging of the cylinders is accomplished by direct one-way flow of scavenging air through the combustion chambers of the cylinders.

As is well known one of the factors in limiting the capacity and efficiency of a two-cycle internal combustion engine of this type is the intense heat created by combustion, which results in warping and distorting the valves and other parts of the engine. The intensity of the heat and the damage resulting therefrom under these conditions is increased by the collection and mingling of the exhaust gas currents flowing from the several adjoining exhaust ports and passing through the cylinder head to the exhaust manifold of the engine. Thus in internal combustion engines of this type where the exhaust gas from the combustion chamber flows through an exhaust port and is then conveyed through the cylinder head past and in contact with a second valve, the mingling of gas currents from two (or more) ports at the second valve results in overheating the second valve. In like manner the mingling of exhaust gas currents results in the overheating of other parts of the engine.

In carrying out my invention I reduce to a minimum the intensity of heat from combustion by providing a maximum area of cooling surface and of circulation of cooling water for conveying the intense heat away from engine parts. In each unitary housing, the cylinder block including the cylinder liner and water compartment, and the assembled plates within the housing, in addition to providing the ample water space, also provide a supporting structure for the crankshaft bearing within the crank case as well as a unitary support to withstand the strains and stresses imposed by the engine when running.

I reduce to a minimum the intensity of heat from combustion by constructing and arranging the interior of each cylinder-head or exhaust-header with an independent, separate, and individual discharge opening or port leading from each of the valved exhaust ports. In this interior arrangement of the exhaust header each valve is provided with a separate cell into which the gas of combustion flows through the exhaust port when the exhaust valve is opened, and from the cell the exhaust gas current is conveyed through a flue to the exhaust manifold. These separated ports, cells, and flues with which each valve is equipped, confine the gas flowing through one port and prevent this current of exhaust gas from mingling with a current or currents from other exhaust ports during the time that the gas currents are in the proximity of the exhaust valves. After the several currents of gas from the exhaust ports have been separately conveyed from the exhaust cells the gas currents are discharged so that they mingle and flow through an exhaust manifold.

In the accompanying drawings I have illustrated one complete example of the physical embodiment of my invention, and several modifications thereof, embodied in a two-cycle internal combustion engine having a group of four over-

head valves per cylinder, which valves are symmetrically disposed to occupy the major area of the cylinder head or exhaust-header that is exposed to the intense heat of combustion.

The number of exhaust ports and valves may be varied but a suitable number are provided to supply ample breathing capacity for the engine, to minimize the restriction of scavenging air and exhaust gas flowing up through the combustion chambers and thence through the removable exhaust-headers. By this interior arrangement of the exhaust headers I enhance the volumetric efficiency of the engine, and increase the ability of the engine to operate with substantially a smokeless exhaust, and a relatively low exhaust temperature at high brake mean effective pressure.

Furthermore, in addition to cooling the exhaust-header by the elimination of excessive heat, the arrangement of the separated exhaust ports, cells, flues and outlets for each exhaust valve facilitates the quick and unobstructed removal of exhaust gas currents from the exhaust ports and without the creation of back pressure.

This ability of the engine to rapidly clear itself of exhaust gases permits an increase in pressure of the scavenging air and fuel air fed to a cylinder in the uniflow system and as a result of this supercharging the power and capacity of the engine is enhanced.

Figure 1 is a vertical, transverse, sectional view through the engine showing the unitary housing, and a removable exhaust header or engine head; and Figure 1*a* is a front end view of the engine in which my invention is embodied.

Figure 2 is an enlarged horizontal detail sectional view of one of the "in line" exhaust headers, as at line 2—2 of Figure 1 passing through the four tubular valve stems and the group of discharge cells and flues which convey the exhaust gas from the exhaust ports to the exhaust manifold.

Figure 3 is an enlarged sectional view of the exhaust header as at line 3—3 of Figure 1 above the exhaust cells, but showing the exhaust gas flues and water spaces.

Figure 4 is a sectional view, as at line 4—4 of Figure 1 passing through the water space or chamber above the cells and flues.

Figure 5 is a vertical sectional view of the exhaust header, as at line 5—5 of Figure 4.

Figure 6 is a horizontal sectional view of a header and the adjacent portions of two adjoining headers, with a modified arrangement of the exhaust cells and flues conveying the gas currents to the exhaust manifold; and Figure 7 is a vertical sectional view as at line 7—7 of Figure 6 showing the exhaust manifold abreast of the exhaust header.

Figure 7*a* is a view similar to Figure 7, but showing the exhaust manifold disposed laterally of the header and also in a higher plane than that of the header.

Figure 8 is a further modification of the invention showing the use of dual exhaust manifolds, one at each side of the engine and disclosing an exhaust header having two of its exhaust cells opening to one manifold and two of its exhaust cells opening in an opposite direction to a second manifold.

Figure 9 is a horizontal sectional view as at line 9—9 of Figure 8.

Figure 10 is a sectional detail view as at line 10—10 in Figure 7*a*.

Figure 11 is a horizontal sectional view showing a modified form of header in which the four exhaust flues from the respective cells open at one and the same side of the header for connection with an exhaust manifold.

In the front elevation Figure 1*a*, one end of a two cycle engine is illustrated to indicate the relation of various parts of the engine that are actuated from the crankshaft S through gearing indicated by dotted lines. These parts include the salt water pump and fresh water pump, the lubricating oil transfer pump and a rotary blower of the Roots type which receives air from the air intake and delivers the air currents under pressure to the air manifold indicated as A in Figure 1. The filter and fuel oil pipe and connections are shown together with lubricating oil pipes and connections in Figures 1 and 1*a*, and the engine control is indicated in Figure 1*a* as located at the remote end of the engine.

In Figures 1 through 5 I have shown one complete exemplification of my invention, but it will be understood that changes and alterations may be made in this specific disclosure as indicated by the various modifications in the drawings, without departing from the principles of my invention.

In Figure 1 I have shown one cylinder of a two-cycle, multi-cylinder, internal combustion engine of the Diesel type, the reciprocating piston P and connecting rod R being shown in relation to the crankcase, the crankshaft S, a main bearing B, and one of the cylinders C. The unitary housing or engine block is provided with a longitudinally extending central water compartment D for the cylinder C, and at one side with an air manifold A supplied with air under pressure from the rotary blower of Figure 1*a* and a lower cylinder air inlet indicates the supply of scavenging air to the annular series of ports in the cylinder C. The header indicated as a whole by the letter H forms the cylinder head and directly over the combustion end of the cylinder are provided the four exhaust ports 1, 2, 3, and 4 opening through the bottom wall 5 of the header. Each header is fashioned with water spaces or chamber W, and the adjoining walls of adjacent headers are provided with registering ports L and L' to insure proper circulation of cooling water in the header. Water spaces and water jackets are also indicated as W in Figure 1 for the circulation of cooling water through the unitary housing.

The exhaust valves 6, 7, 8, and 9 forming a group to control the four exhaust ports above each cylinder, are provided with tubular stems 10, and these valves are held closed in their respective ports by springs 11 in Figure 1. The numeral 12 indicates, as a whole the valve operating unit, which depresses the valves into the open position with relation to the combustion chamber in the upper end of the cylinder C, the springs 11 being employed to lift the valves to closed position in their ports.

Each valve operating unit, one for each group of valves, is actuated from the cam shaft S', and each operating unit is mounted in an enclosed casing T, here shown as located above the header H. The exhaust ports 1, 2, 3, 4 are opened by the valve operating units when the piston P is near or approaching the bottom of its stroke, and the gases of combustion under considerable pressure immediately flow upward through the open ports. Just as the exhaust gas is released the cylinder air inlet ports in the cylinder are opened by the descending piston, and the scav-

enging air under pressure from the air manifold A passes up through the cylinder C, expelling any remaining exhaust gas, and supplying a small quantity of air through the exhaust ports that tends to cool the exhaust valves. As the valve operating unit permits the valves to automatically close the exhaust ports, the piston P is also moving upwardly in Figure 1 to close the cylinder air inlet ports, and as the piston moves toward and near the top of its stroke and compresses the air in the combustion chamber of the cylinder to a relatively high degree, fuel oil is injected at I in Figure 5 for the explosion under compression.

The injector unit I, Figure 5, is mounted in the approximate center of the hollow header H, and an enclosing tubular shield or guard G for the injector extends between the bottom wall 5 and the top wall 13 of the header. Each injector unit I and its guard G are alined in a header-section H with the longitudinal axis of the complementary cylinder C, and one set of exhaust ports and valves for each cylinder is arranged in an annular series, or circumferentially, about the injector unit as a center. Large stud bolts 14 and nuts 15 are illustrated as passing down through tubular bosses 16, Fig. 5 of the header, which join the removable header with the unitary housing or engine block, and smaller bolts 17 passing through tubular bosses 18 of the header fasten the header to the cylinder C.

The interior of the hollow header H forms a water chamber comprising numerous spaces as W for the circulation of cooling water, and the header is fashioned with four integral cylindrical guide sleeves 19 depending from the lower or inner face of the wall 13 of the header, in contact with the cooling water as it circulates within the water chamber. A portion of the tubular valve stems 10 is enclosed within a guide sleeve to carry off or radiate heat from the stem through the circulating water.

The lower portions of the valve stems, and the valves, are uncovered and are not contacted, directly, by the cooling water, but they are accessible to the heat created by combustion in the upper portion of the cylinder. To limit the intensity of heat applicable to the valves and to the adjoining parts of their stems, the currents of exhaust gas from the respective exhaust ports 1, 2, 3, and 4 are prevented from mingling while they are in proximity to the valves. The gas currents from the respective ports are conveyed, separately, away from the ports, through separate flues, to an exhaust manifold, thereby facilitating the rapid clearance of exhaust gas from the combustion chamber and exhaust passages, eliminating back pressure, and permitting a uniflow air system at substantially higher pressure than is now obtained in internal combustion engines of this type. For this purpose the interior of the exhaust header is so constructed and arranged that the several streams or currents of exhaust gas flowing from the several ports are each, separately, subjected to the cooling action of the circulating water coming in contact with the partitions and walls within the exhaust header.

As best seen in Figure 2 within the interior of the hollow header and above each of the exhaust valves, is fashioned a cell or cavity, as 20, 21, 22, and 23 formed within the integral interior vertical walls or partitions 24 rising from the bottom wall 5 of the exhaust header H. An upper horizontal partition 25 closes the top part of each cell, except for the guide sleeves 19, which sleeves, as shown, integrally connect the top wall 13 of the header with the horizontal partition 25.

Each of these cells merges at one side with a discharge flue as 26, 27, 28, and 29, through which the separated currents or streams of exhaust gas are discharged from the exhaust ports 1, 2, 3, and 4, and each of these discharge flues conveys a single current or stream of exhaust gas to the exhaust manifold, as indicated at the right in Figure 1.

Above the horizontal partitions that form the top walls 25 of the several exhaust cells within the header are arranged additional integral vertical walls as 30, which, together with a pair of integral, vertical, spaced, plates 31, form four recesses in which are located the four guide sleeves 19 of the valve stems. These curved baffle walls or plates 31 and the walls of the cells provide tortuous passages within the water chamber of the header which cause the circulating water to contact with sleeves 19, guard G of the ignition unit, and the walls of the exhaust cells, and by radiation the heat is transferred from the metal walls to the water in usual manner for cooling purposes.

In the modification of the invention in Figures 6 and 7 the headers H' are arranged so that the exhaust gas currents first flow longitudinally of the engine away from the cells 20', 21', 22', and 23', to a large exhaust gas chamber, as 32, and thence the mingled currents flow laterally of the engine through outlet ports 33 of the header and thence through complementary ports 34 of the exhaust manifold 35, and into the latter manifold. The alined headers H' are assembled as indicated in Figure 6, and the water cooling jackets and spaces W are connected together as at ports L and L' for proper circulation of the cooling water in contact with the heated metal parts of the engine. The cylindrical exhaust manifold 35, as indicated in Figure 7, is attached to the alined headers in substantially the same horizontal plane, and of course the header ports 33 and the manifold ports 34 register to receive the total volume of gases from four exhaust valves, although, in this instance as seen in Figure 6 two of the valves as 1 and 2 are located over one cylinder and two valves as 3 and 4 are located over an adjoining cylinder.

The gas currents from the four cells do not mingle until they have passed from the four separate flues into the large capacity chamber 32, and it will be apparent that the firing of the adjoining cylinders may be arranged so that gas currents from two exhaust ports will be timed differently from the other two ports opening to an adjoining cylinder.

In the further modified form of the invention in Figure 7a the exhaust manifold 35, although located at one side of the header H2 as in Fig. 7, it will be seen that the exhaust manifold is elevated to a horizontal plane higher than the plane of the header. The exhaust manifold is connected to each of the headers H2 by means of an elbow or connection 34' that is attached as by bolts to the manifold and the headers. In Figure 10 which is a longitudinal vertical section, enlarged, as at line 10—10 of Figure 7a to show an end portion of the engine, it will be seen that these connections 34' are located at the opposite ends of the headers H2, and that each elbow (except the end one) receives exhaust gas from two adjoining headers H2. Thus, the exhaust gas from valve 8 passes from its cell 8' up through a

vertical flue 8a to a connection 34', and the exhaust gas from valve 9 flows from cell 9' in the opposite direction and up through flue 9a to a connection 34'.

In the form of the invention disclosed in Figures 8 and 9 the exhaust headers He are interposed between a dual arrangement of exhaust manifolds indicated at 36 and 37, one half of the exhaust gas passing laterally to one side of the engine and the other half of the exhaust gas passing laterally to the other side of the engine to facilitate clearance of the exhaust gas and thus create a condition that permits higher compression of the fuel air and scavenging air fed to the cylinders. The flues from the four cells, shown in Figs. 8 and 9, as 20a, 21a, 22a, and 23a, convey the four currents of exhaust gases through ports 38 to the two manifolds 36 and 37, and thus prevent mingling of the gas currents in proximity to the valve structures.

In Figure 11 a header of the same type as that shown in Figures 2 and 3 is disclosed, with the flues from all of the cells opening at one side of the header. Thus, the two cells 20 and 22 merge with and open into the spaced flues 39 and 40, and the two cells 21 and 23 merge with and open into two shorter, intermediate, flues 41 and 42, and each of these flues 39 and 40 is adapted to be connected directly to the exhaust manifold. The two intermediate flues 41 and 42 merge into a single, large port that is to be connected directly to the exhaust manifold, and these water-cooled cells and flues rapidly convey the exhaust gas currents away from the combustion chamber of the cylinder to make room for the succeeding charge.

While I have shown a group of four exhaust valves in each form of the invention, it will be understood that this number may be decreased or increased under varying conditions, and in all of the illustrated headers it will be seen that I have provided ample means for eliminating excessive heating within the headers, and at the same time provided for unobstructed and unrestricted conveyance of the total volume of exhaust gas from each cylinder of the engine when the valves are opened.

The individual cells and their respective flues and discharge outlets to the exhaust manifold permit quick expansion of the outwardly flowing exhaust gas currents with consequent reduction in back fluid pressure in the combustion chamber and in the cells. Therefore the scavenging air and the fuel air delivered to the cylinder under higher pressure than the resistance or back pressure of the outwardly expanding and flowing exhaust gas currents, quickly and thoroughly scavenge the cylinder of the exhaust gas created by the preceding explosion or compression stroke.

Up to the present time, so far as I am aware, the construction of two cycle engines with a group of exhaust valves to each cylinder has been confined to medium size engines, due to the fact that excessive heat from exhaust gas has distorted the valves and provision has not previously been made for facilitating the scavenging of the combustion chambers. By the combination and arrangement of parts according to my invention these troubles are eliminated, the permitted use of higher inlet air pressures increases the horse power of the engine, and makes it possible to employ uniflow systems in larger size engines with higher relative horse power per pound weight. These combinations and arrangements also provide for use of smaller size engines with less space than is now possible with the customary loop-scavenging type of engines now in general use for the larger size horse power requirements. By the use of the uniflow two-cycle system illustrated I am enabled to increase the area of the air ports for scavenging and for combustion, and also to increase the area of the exhaust ports, thereby adapting my invention to the larger, high speed, two cycle engines.

By thus confining and holding separate the several small volume exhaust-gas currents conveyed from each of the exhaust ports, a large volume of heated gas is prevented from accumulating in close proximity to the valves and the cylinders and pistons. The faces of the walls of cells and flues provide an extensive area for contact from the water circulating in the many passages, channels, and water jackets, and this extensive radiating area is instrumental in materially reducing the temperature within the headers and cylinders, and housings. This reduction in temperature and consequent elimination of warping and other distortion of the valves and other parts in the headers and in the housings, permits an increase in capacity, in efficiency, and in speed of this type of engine than can now be accomplished in two-cycle internal combustion engines with multiple exhaust valves, in the medium to larger sizes of engines.

Heretofore, on account of the excessive heating of the multiple exhaust valves of the two-cycle uniflow compression ignition engines, these engines have been limited in their successful operation to approximately eighty pounds per square inch brake mean effective pressure. This limit in the brake mean effective pressure can be increased approximately fifty per cent by the utilization of the construction and arrangement of parts which makes possible the reduction and maintenance of the exhaust valve temperature. The comparatively lower temperature permits the supercharging of the scavenging and combustion air, thereby increasing the pressures from fifty to a hundred per cent above the pressure of present practice, and the employment of these higher pressures result in a corresponding increase of power output for the same relative size and weight of engine.

Having thus fully described my invention, what I claim as new and desire to secure by Letters Patent is:

1. In a two-cycle internal combustion engine, the combination with a hollow header forming an interior cooling chamber for circulating water, said header having a group of exhaust ports in its lower face and control valves therefor, of interior, integral partitions and walls within the cooling member forming an annular series of separate and independent cells and flues one for each port, and an exhaust manifold with which said flues communicate.

2. In a two-cycle multi-cylinder internal combustion engine, the combination with a unitary housing including a lower crankcase, a central water-cooling compartment extending longitudinally within the housing and spaced cylinders rigid therewith, an air manifold above the cylinders, and an exhaust manifold and a water-cooling jacket therefor, of a removable integral hollow header above each cylinder, said headers each having exhaust ports and valves for said ports, and separate means for confining and conveying the separate currents of gas from the respective exhaust ports.

3. In a two-cycle internal combustion engine

the combination with a unitary housing including a lower crankcase, a central water-cooling compartment extending longitudinally of the housing and spaced cylinders rigid therewith, an air manifold, and an exhaust manifold, of a removable header for each cylinder, means for fastening the headers to the cylinders, means for fastening the headers to said housing, said headers each having a group of exhaust ports and valves therefor, and separated means for confining and conveying the separate currents of gas from the respective exhaust ports.

4. In a two cycle internal combustion engine of the uniflow scavenging type having an injector unit and an overhead annular series of ports and valves arranged about said unit, and an exhaust manifold, the combination of means for separately conveying an exhaust gas current from each of said ports to the manifold, and means for separately reducing the temperature of said currents, whereby excessive heating of the engine parts is prevented and supercharging of the engine is permitted.

5. In a two-cycle engine employing the uniflow scavenging system, the combination with a hollow header having an annular series of exhaust ports and valves therefor grouped about a central point, of an exhaust manifold, and separate means for confining and conveying currents of exhaust gas from the respective ports to said manifold.

6. In a two-cycle internal combustion engine, the combination with a hollow header having an injector unit mounted therein and a series of exhaust valves and ports circumferentially arranged about said unit, of an exterior exhaust manifold, conveyers for separately confining the exhaust gas currents and transferring said currents from the ports to said manifold, and means for cooling the conveyers.

7. In a two-cycle internal combustion engine, the combination with a hollow integral header, an injector unit mounted in the header, and said header having a group of overhead exhaust ports and valves arranged around said unit, of an enclosed cell for each valve and a discharge flue for each cell whereby currents of confined exhaust gas are transferred from said ports and out of the header.

8. In a two-cycle internal combustion engine, the combination with a hollow integral header, an injector unit mounted in the header, and said header having a group of overhead exhaust valves and ports arranged around said unit, of an enclosed cell for each port and a discharge flue extended from each cell for confining and conveying separated gas currents, and means within the header for cooling said cells and flues.

9. In a two-cycle internal combustion engine, the combination with a hollow integral header, an injector unit mounted in the header, and said header having an annular group of exhaust ports and valves arranged around said unit, of an exhaust manifold, an enclosed cell and a discharge flue for each valve whereby exhaust gases are confined and conveyed from the ports to the manifold, and means contacting with the exterior surfaces of the cells and flues within the hollow header for cooling said cells and flues.

10. In a two-cycle internal combustion engine, the combination with a hollow header forming an interior cooling chamber for circulating water, said header having a group of exhaust ports in its lower face and control valves therefor, of interior integral partitions and walls within the cooling chamber forming an annular series of separate and independent cells and flues one for each port and each connected with said header whereby each cell and flue is separately cooled, and an exhaust manifold with which said flues communicate.

11. In a two-cycle multi-cylinder internal combustion engine, the combination with a unitary housing including a lower crankcase, a central water-cooling compartment extending longitudinally within the housing and spaced cylinders rigid therewith an air manifold above the cylinders, and an exhaust manifold and a water-cooling jacket therefor, of a removable, integral, hollow header above each cylinder, said headers each having exhaust ports and valves for said ports, separate means for confining and conveying the separate currents of gas from the respective exhaust ports, and separate means connected with said header for cooling said confining and conveying means.

12. In a two-cycle internal combustion engine, the combination with a unitary housing including a lower crankcase, a central water-cooling compartment extending longitudinally of the housing and spaced cylinders rigid therewith, an air manifold, and an exhaust manifold, of a removable header for each cylinder, means for fastening the headers to the cylinders, means for fastening the headers to said housing, said headers each having a group of exhaust ports and valves therefor, separated means for confining and conveying the separate currents of gas from the respective exhaust ports, and separate means connected with said headers for cooling said confining and conveying means.

13. In a two-cycle engine employing the uniflow scavenging system, the combination with a hollow water cooled header having an annular series of exhaust ports and valves therefor grouped about a central point, of an exhaust manifold, separate means for confining and conveying currents of exhaust gas from the respective ports to said manifold, and separate means connected with said header for cooling the confining and conveying means.

14. In a two-cycle internal combustion engine, the combination with a hollow water cooled header having an injector unit mounted therein and a series of exhaust valves and ports circumferentially arranged about said unit, of an exterior exhaust manifold, conveyers for separately confining the exhaust gas currents and transferring said currents from the ports to said manifold, and means connected wit said header for separately cooling the conveyers.

15. In a two-cycle internal combustion engine, the combination with a hollow integral water cooled header, an injector unit mounted in the header, and said header having a group of overhead exhaust ports and valves arranged around said unit, of an enclosed cell for each valve and a discharge flue for each cell whereby currents of confined exhaust gas are transferred from said ports and out of the header, and separate means connected with said header for separately cooling each cell.

FRANK E. YINGLING.