June 6, 1939. M. CHRISTENSEN 2,160,830

METHOD OF AND MECHANISM FOR OPENING BOOK SIGNATURES AND THE LIKE

Filed Sept. 11, 1936 7 Sheets-Sheet 1

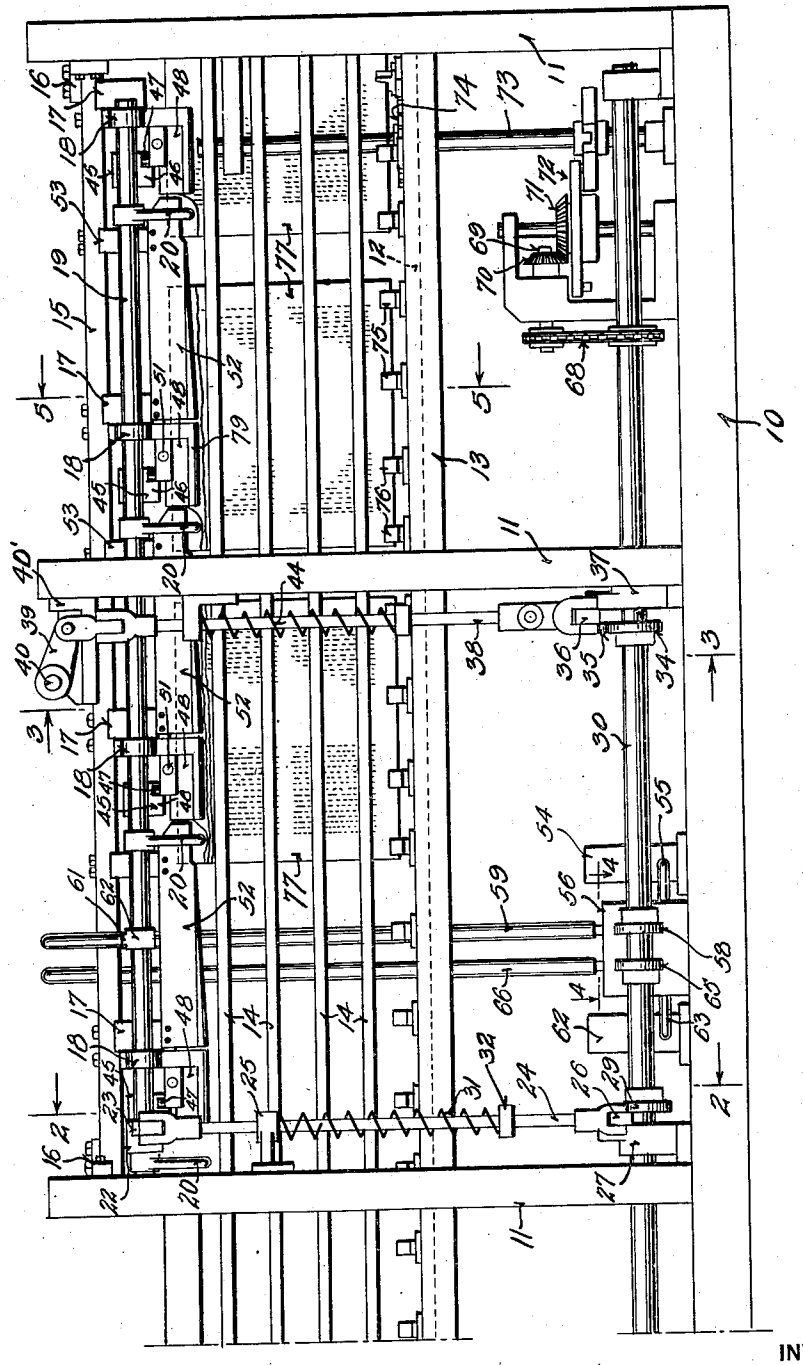

FIG. 1

INVENTOR
MARTIN CHRISTENSEN
BY Erwin B. Spring
ATTORNEY

June 6, 1939. M. CHRISTENSEN 2,160,830

METHOD OF AND MECHANISM FOR OPENING BOOK SIGNATURES AND THE LIKE

Filed Sept. 11, 1936 7 Sheets-Sheet 2

FIG. 2

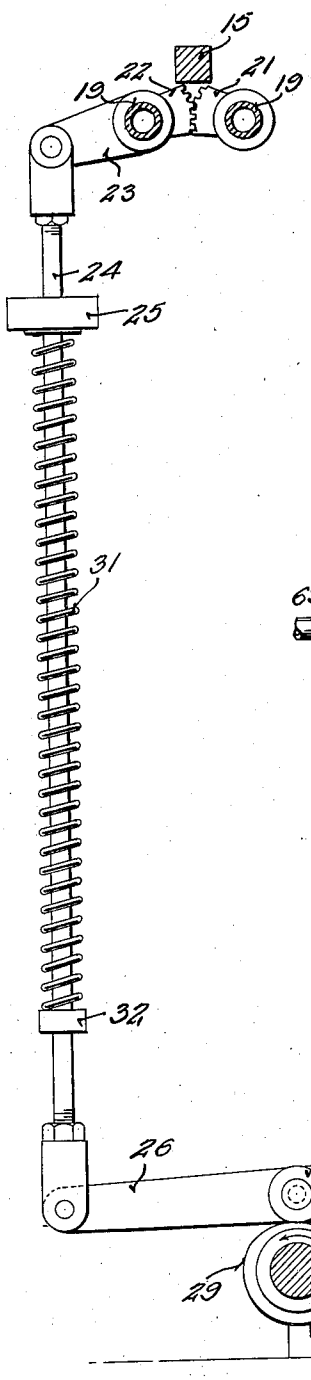

FIG. 3

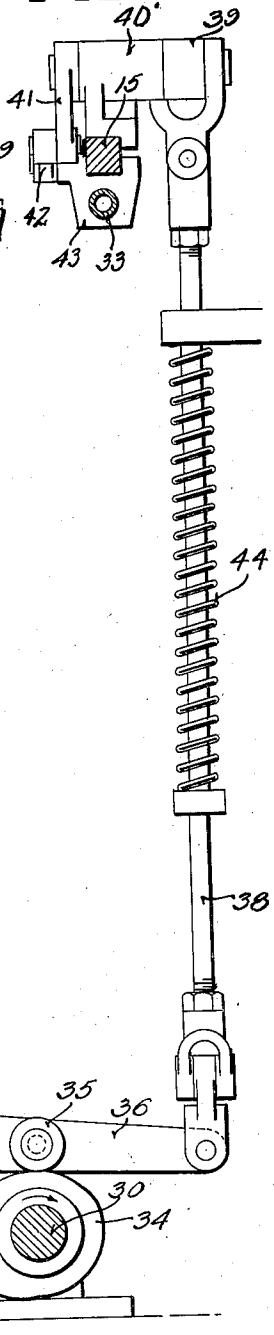

FIG. 3

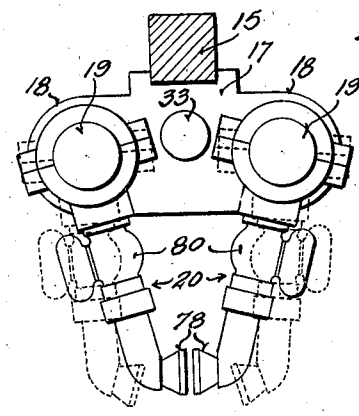

FIG. 4

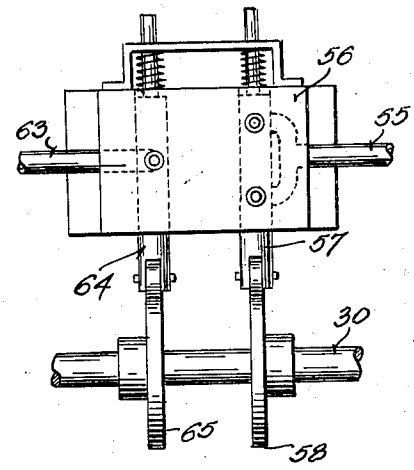

INVENTOR
MARTIN CHRISTENSEN
BY Erwin B. Ewing
ATTORNEY

June 6, 1939. M. CHRISTENSEN 2,160,830

METHOD OF AND MECHANISM FOR OPENING BOOK SIGNATURES AND THE LIKE

Filed Sept. 11, 1936 7 Sheets-Sheet 3

FIG. 5

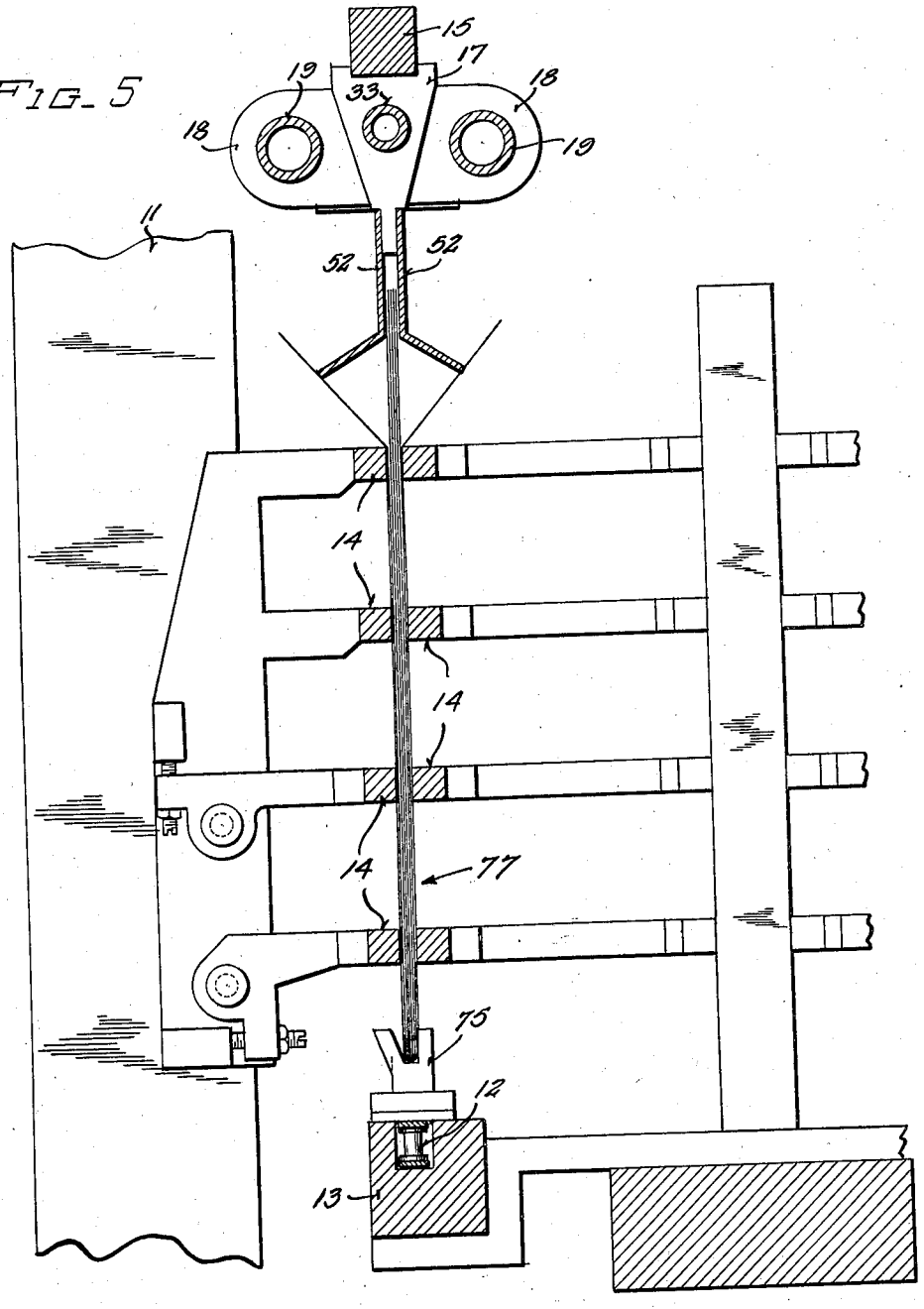

INVENTOR
MARTIN CHRISTENSEN
BY
Erwin B. Kiring
ATTORNEY

June 6, 1939. M. CHRISTENSEN 2,160,830

METHOD OF AND MECHANISM FOR OPENING BOOK SIGNATURES AND THE LIKE

Filed Sept. 11, 1936 7 Sheets-Sheet 4

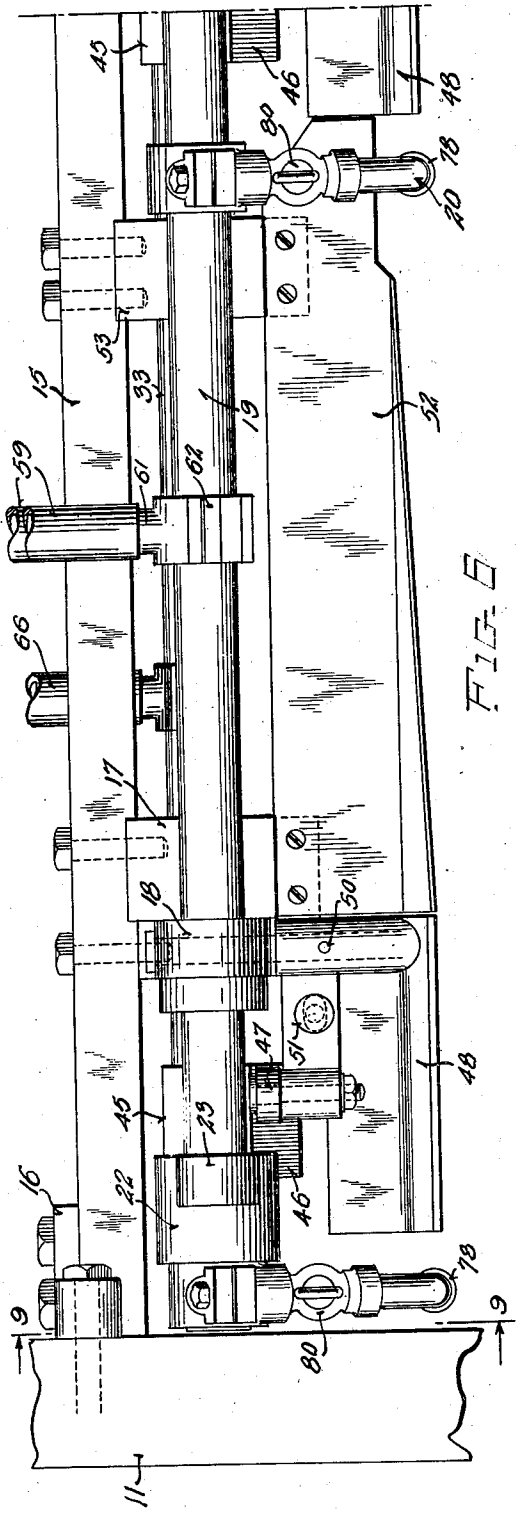

FIG. 6

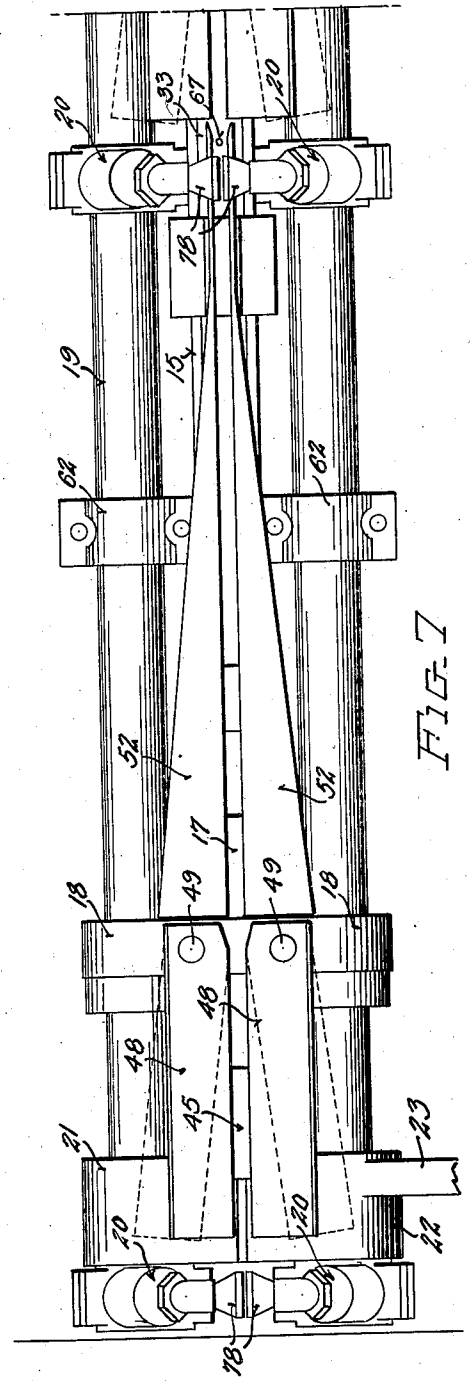

FIG. 7

INVENTOR
MARTIN CHRISTENSEN
BY
Erwin B. Keiser
ATTORNEY

June 6, 1939. M. CHRISTENSEN 2,160,830

METHOD OF AND MECHANISM FOR OPENING BOOK SIGNATURES AND THE LIKE

Filed Sept. 11, 1936 7 Sheets-Sheet 5

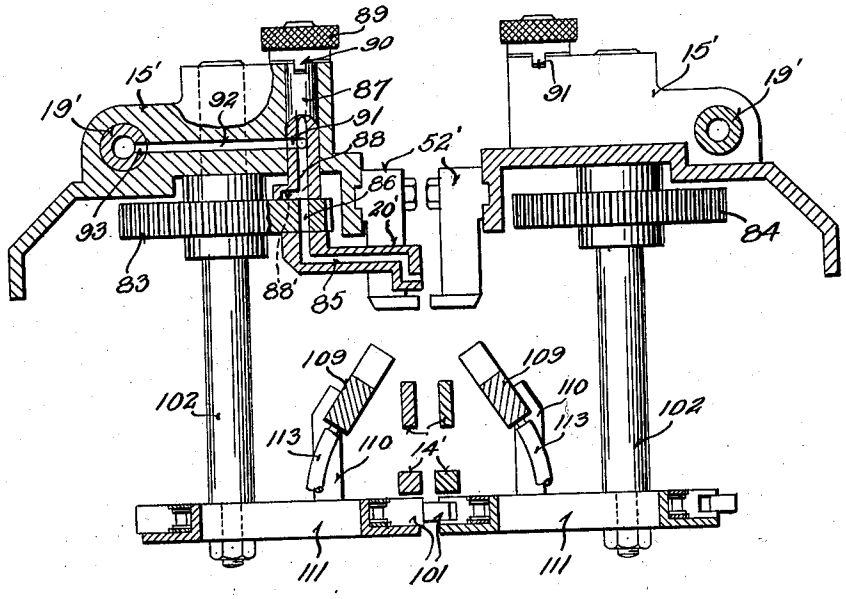

FIG. 12

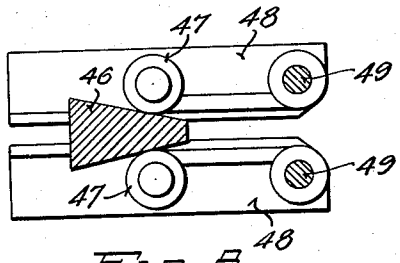

FIG. 8

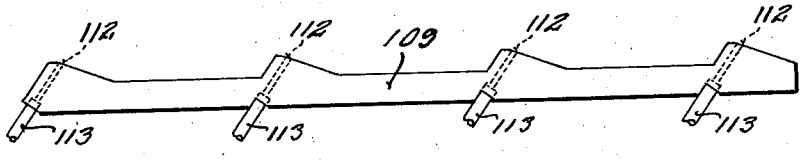

FIG. 15

INVENTOR
MARTIN CHRISTENSEN
BY Erwin B. Ising
ATTORNEY

June 6, 1939. M. CHRISTENSEN 2,160,830

METHOD OF AND MECHANISM FOR OPENING BOOK SIGNATURES AND THE LIKE

Filed Sept. 11, 1936 7 Sheets-Sheet 6

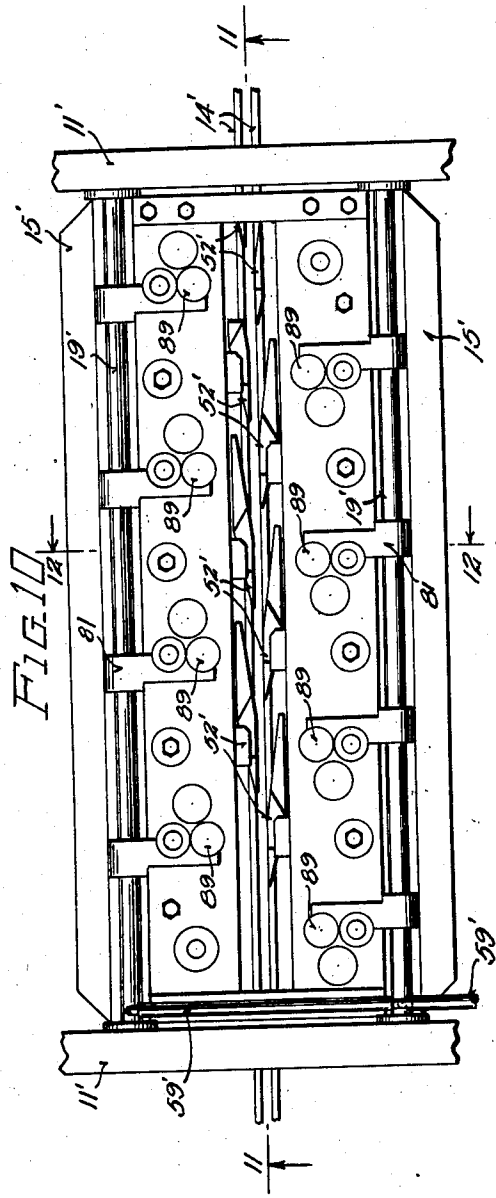

FIG. 10

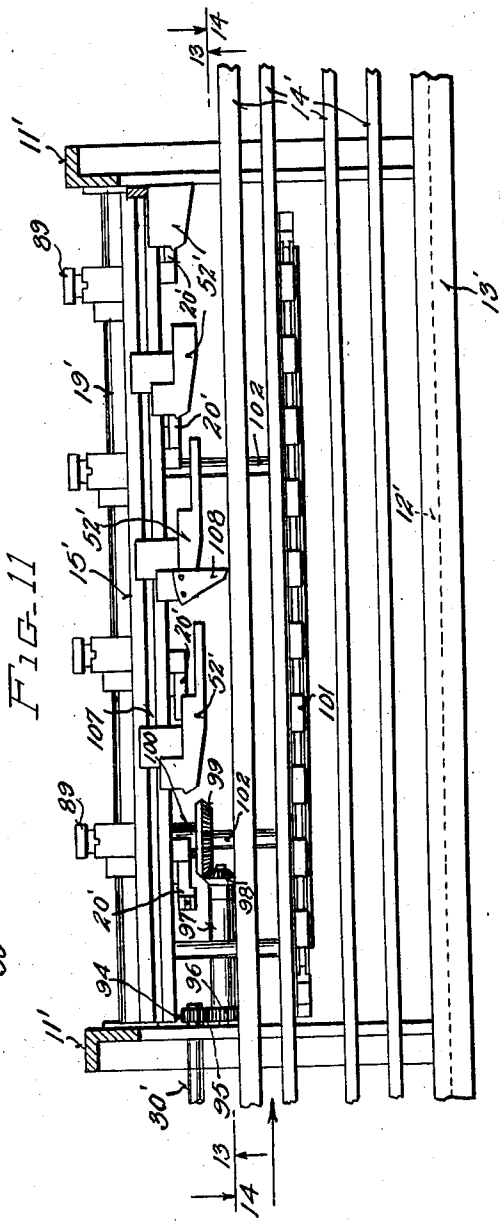

FIG. 11

INVENTOR
MARTIN CHRISTENSEN
BY
Erwin B. Eiring
ATTORNEY

June 6, 1939. M. CHRISTENSEN 2,160,830

METHOD OF AND MECHANISM FOR OPENING BOOK SIGNATURES AND THE LIKE

Filed Sept. 11, 1936 7 Sheets-Sheet 7

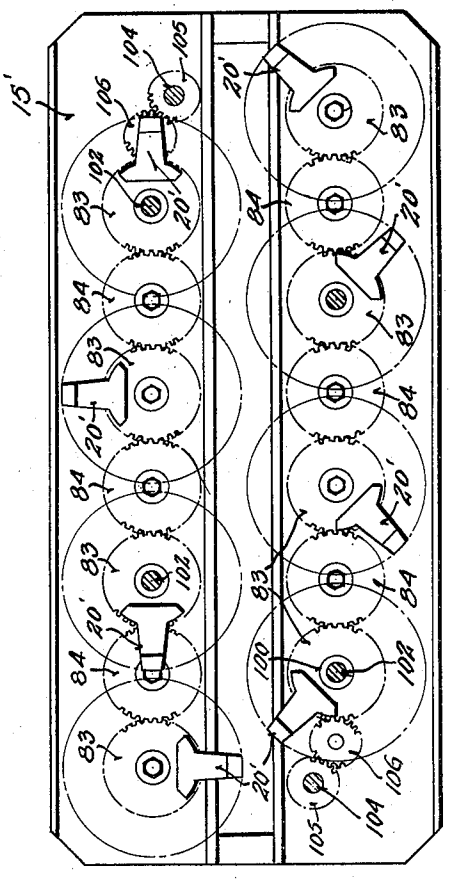

FIG. 13

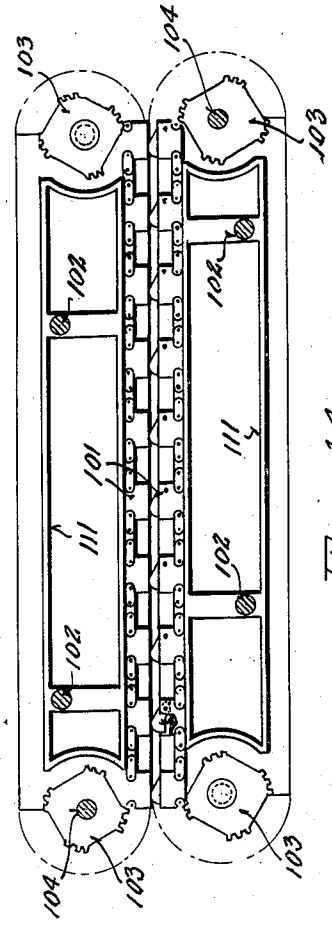

FIG. 14

INVENTOR
MARTIN CHRISTENSEN
BY Erwin B. Ewing
ATTORNEY

Patented June 6, 1939 2,160,830

UNITED STATES PATENT OFFICE

2,160,830

METHOD OF AND MECHANISM FOR OPENING BOOK SIGNATURES AND THE LIKE

Martin Christensen, Wauwatosa, Wis.

Application September 11, 1936, Serial No. 100,244

28 Claims. (Cl. 270—53)

This invention relates to signature-handling machines, and more particularly to a method and apparatus for opening closed book signatures.

The primary object of the present invention resides in the provision of new and improved method and means for automatically opening closed book signatures and the like.

A further object resides in the provision of new and improved means whereby the desired position of the opening in the signature may be pre-selected; and should desire or necessity require more than a single opening of the signature, the present mechanism is adapted to effect such additional openings at any desired position in the signature.

A further object lies in the provision of new and improved means whereby individual and successive sheets of the signature may be engaged and deflected outwardly so as to form the desired opening or openings in the signature. These openings may be on either or both sides of the center fold of the signature.

Another object resides in the provision of new and improved vacuum means for effecting the individual and successive opening of sheets from the outer face or faces of the signature.

Another object lies in the provision of new and improved fluid pressure means adapted to inject a jet of air onto the leading edge of the signature to be opened, in a manner which will facilitate the operation of the vacuum means for effecting the opening of the signature.

Another object lies in the provision of means adapted for manual manipulation to render selected vacuum sheet-engaging means inoperative for the purpose of determining the number of sheets to be withdrawn or opened outwardly from the signature so as to position the signature opening between the desired sheets of the signature.

Other objects and advantages will become manifest from the following description of illustrative embodiments of the present invention.

In the drawings:—

Figure 1 is a side elevational view of a signature-handling machine, showing the opener mechanism of the present invention.

Fig. 2 is a vertical sectional view on a line 2—2 of Fig. 1, showing the vacuum signature opener actuating mechanism.

Fig. 3 is a vertical sectional view on a line 3—3 of Fig. 1, showing mechanism for effecting the opening of gate members.

Fig. 4 is a horizontal sectional view on a line 4—4 of Fig. 1, showing the vacuum and pressure valve mechanisms together with a portion of the air circuits.

Fig. 5 is a vertical sectional view on a line 5—5 of Fig. 1, showing signature guide and conveyor means.

Fig. 6 is an enlarged side elevational view of a portion of the signature opener mechanism.

Fig. 7 is a bottom plan view of Fig. 6.

Fig. 8 is a horizontal sectional view on a line 8—8 of Fig. 6, showing gate opening mechanism.

Fig. 9 is a vertical sectional view on a line 9—9 of Fig. 6, showing vacuum sheet-engaging means.

Fig. 10 is a top plan view of a modified form of signature opener embodying the teachings of the preesnt invention.

Fig. 11 is a vertical sectional view on a line 11—11 of Fig. 10 showing the opener mechanisms disposed to one side of the signature.

Fig. 12 is a vertical sectional view on a line 12—12 of Fig. 10 through one vacuum sheet-engaging member and the conveyor chain.

Fig. 13 is a horizontal sectional view on a line 13—13 of Fig. 11 looking upwardly and showing the complete set of rotary vacuum sheet-engaging members.

Fig. 14 is a horizontal sectional view on a line 14—14 of Fig. 11 looking downwardly and showing the signature conveyor.

Fig. 15 is an elevational view of a portion of the blower bar shown in Fig. 12.

The embodiment of the present invention shown in Figs. 1 to 9 inclusive in the accompanying drawings illustrates a signature-handling machine embodying the new and improved signature opener mechanism of the present invention. The machine comprises a base 10 upon which are mounted a plurality of vertically disposed frame members 11. A conveyor chain 12 is guided for movement in a track 13 which may be raised or lowered in any simple manner by appropriate mechanism (not shown). A plurality of guide bars 14 are mounted in pairs and vertically spaced above the conveyor and to either side of the same. The lower two bars 14 disposed above and to each side of the conveyor 12 are adapted to be swung about appropriate pivots when the track 13 is elevated to accommodate signatures of different depths. A bar 15 is fixedly mounted to the frame members 11 by means of suitable brackets 16. This bar 15 serves to support the opener mechanisms to be hereinafter more specifically described. A plurality of brackets 17 are anchored in spaced relationship along the bar 15. These brackets are

provided with ears 18 disposed on either side of the bar 15. The ears 18 are provided with bores through which hollow shafts 19 are rockably mounted. A plurality of vacuum picker members 20 are fixed to the hollow shafts 19 in spaced relationship along the same. These vacuum picker members swing with the hollow shaft 19 through the action of segmental gears 21 and 22, each of which is fixed to one of the parallel shafts 19. The gear 22 is provided with an arm 23. A connecting link 24 has one end fixed to the arm 23 and extends downwardly through a suitable journal 25 and has its lower end connected to one extremity of a lever arm 26. The other end of the lever arm 26 is pivotally mounted on a bearing bracket 27 fixed to the base 10. A cam follower 28 is mounted intermediate to the ends of the lever 26. This cam follower 28 cooperates with a cam 29 which is fixedly mounted on a longitudinally extending shaft 30 which forms one of the driving shafts of the machine. The cam follower 28 is normally urged toward and kept in contact with the cam 29 by means of a coil spring 31 which surrounds the link 24 and extends from the fixed abutment 25 to an adjustably fixed collar 32. As the shaft 30 is rotated the link 24 raises and lowers to effect an oscillatory movement of the arm 23, which in turn is transmitted to segmental gear 22 to segmental gear 21, thereby effecting partial rotation of the hollow shafts 19 in opposite directions. As the shafts 19 rock in one direction, the sheet-engaging members 20 will swing outwardly from their normal sheet-engaging position.

A hollow shaft 33 is also journaled for longitudinal movement in the spaced anchoring blocks 17. Movement of this hollow shaft is effected from a cam 34 which is also fixedly mounted on the drive shaft 30 of the machine. A cam follower 35 is mounted intermediate the ends of a lever 36, one of which is pivotally mounted on a bearing bracket 37 while the other end is connected to suitable linkage 38 to one end of a lever arm 39. This lever arm 39 is fixed to a stub shaft 40 which in turn is journaled in a bracket 41 secured to a frame member 11. The other extremity of the stub shaft 40 has anchored thereto a link 41 through which motion is imparted to the hollow shaft 33 through a connecting link 42 which in turn is fixed in a bracket 43 anchored on the hollow shaft 33. As the cam follower 35 rises, its movement overcomes the normal action of coil spring 44 and the link 38 moves upwardly. Upward movement of this link effects a forward movement of the hollow shaft 33 through the linkage just described. As the shaft 33 moves toward the right (as shown in Fig. 1), movement is imparted to a plurality of cam members 45 which are fixedly mounted in spaced relationship along the shaft 33. The cam members 45 are provided with wedge-shaped lower portions 46, the opposite faces of which contact the rollers 47 which are rotatably mounted on gate members 48. The gate members are mounted for movement on vertical pins 49 which extend downwardly through the ears 18 formed on the block members 17. A pin 50 serves to retain the gate members in a proper position on the pins. It will be noted from Fig. 8 that these gate members are mounted in pairs and that the cam rollers 47 are retained against the portion 46 of the members 45 by means of a spring tension bolt 51 which passes through a slot connection in each of the members 48. When the hollow shaft 33 is moved to the right, the gates 48 are forced outwardly by the action of the cam members 45. The outward movement of the gates 48 is synchronized with the outward movements of the vacuum sheet-engaging members 20 for a purpose to be later more specifically described. A plurality of guide plates 52 are mounted on supporting blocks 17 and on centering blocks 53. These guide plates are provided with outwardly turned lower flanges which increase in width from the right hand end to the left hand end of the plates.

A vacuum pump 54 is mounted on the base 10 and driven in any approved manner (not shown). A pipe connection 55 connects the vacuum pump with a valve body 56 in which a valve plunger 57 is slidably mounted. The valve plunger 57 is normally urged into contact with a cam 58 which is also mounted on a drive shaft 30 of the machine. As the cam 58 rotates, the valve plunger 57 is reciprocated so as to effect intermittent connection between the vacuum pump 54 and the hollow shafts 19 through a pair of suitable pipe connections 59 which extend from stub pipes 60 in the casing 56 to nipples 61 on fittings 62 which is mounted on the hollow shafts 19. Through the connections just described, it will be noted that when the valve plunger 57 is in one extreme position, the pump 54 will be drawing in its supply of air through each of the vacuum sheet-engaging members 20, and this condition exists when the members 20 are in the position shown in Fig. 2 and the full line showing in Fig. 9. When the vacuum sheet-engaging members have been withdrawn to the extreme position shown in dotted line in Fig. 9, the plunger 57 will cut off the connection between the pump and sheet-engaging members and thus release contact between the sheet-engaging members and the signature which is being opened.

A pressure pump 62 is mounted on the base 10 and also driven in any approved manner (not shown). This pump is provided with a connection 63 which leads to the valve body 56 and communicates therein with a valve plunger 64 which is normally urged into contact with a cam 65 mounted on the shaft 30 adjacent the cam 58. Similar pipe connections 66 lead from the plunger bore up to the hollow shaft 33, and when plunger 64 is in one extreme position air is forced from the pump 62 through the valve and pipe connections 66 to the hollow shaft 33, from which it is discharged through suitably spaced orifices 67 which are positioned approximately directly above the vacuum signature-engaging member 20.

The conveyor chain 12 is driven from the drive shaft 30 through suitable chain and sprocket connections 68, a shaft 69, bevel gears 70 and 71, and thence through a Geneva movement generally designated as 72, shaft 73, and a suitable chain sprocket 74 which engages the conveyor chain 12. A plurality of guide and gripping members 75 and 76 respectively are supported in spaced relationship along the conveyor chain 12.

Signatures 77 are fed into the machine by any appropriate signature feeding means (not shown), in such a manner that the lower or folded edge of the signature is gripped between the members 76. As the conveyor is moved in a step by step movement by means of the Geneva drive, the signatures progress from station to station along the opener mechanism. As the first signature leaves the first opener mechanism, the vacuum signature-engaging members contact the upper

left hand corner portion of the outer sheet of the signature. The vacuum means becomes effective through action of the valve plunger 57 and the outer sheet is drawn into contact with a vacuum cup 78 mounted on the lower extremity of the member 20. At this point in the cycle, the cam 29 effects a rocking movement of the hollow shaft 19 in an outwardly direction and the seized sheet will move from beneath the leading corner of the plate 52 to a position outside of the same. Simultaneously with the movement of the vacuum sheet-engaging means, the cam 34 will effect movement of the cam members 45 in a direction which will cause the outward or spreading movement of the gates 48. After the members 20 and 48 have been swung to their outer extreme position, the vacuum connection with the members 20 is broken and both members 20 and 48 move inwardly to an intermediate position where they dwell for a portion of the cycle. During the dwell of these members, the conveyor chain 12 is advanced one full step and at the completion of the advance of the conveyor chain and signature the members 20 and 48 again move to a closed position under the influence of cams 29 and 34 respectively, whereupon the vacuum connection is re-established and the vacuum cups 78 of the second station of signature opening contact the second sheet to effect its withdrawal from the channel in which it is passing, between the adjacent plates 52. It will be noted at this point that as the signature travels from the first position to the one just described, the outer sheet which was bent outwardly under the action of the first sheet-contacting member has ridden along the lower flanged portion 52 and along the lower flanged portion 79 of the member 48 to a position wherein it will lie outside of the second vacuum sheet-engaging member 20. This action is repeated after the second sheet is withdrawn from the channel lying between the plates 52 and again after the third sheet has been withdrawn therefrom so that as the signature passes through the four sets of sheet-engaging members, each pair will normally remove the two outer sheets so that they will pass outside of the succeeding pairs of vacuum sheet-engaging members. The vacuum sheet-engaging members are each provided with petcocks 80 which may be manually operated to render individual vacuum sheet-engaging members active or inactive as desired. In this manner, a single sheet may be withdrawn from either side or any desired number of sheets may be withdrawn to provide one or more openings in the signature between any pre-selected pages thereof.

A modified form of the present invention is shown in Figs. 10 to 15 inclusive. In this form of the invention the conveyor is constantly moving and the sheet-engaging members are rotatable. The opener mechanisms are mounted between a pair of vertically disposed frame members 11, which are mounted upon a suitable base (not shown) but similar to that indicated in the other form of the invention. Hood members 15' are supported between the frames 11' and carry the opener mechanism illustrated in the present form. A pair of hollow shafts 19' are disposed adjacent the hood 15' and pass through bosses 81 which form an integral part of the hoods. A plurality of stub shafts 82 extend downwardly from each section of the hood 15' and carry mating gears 83 and 84. Gears 83 are each provided with an extended arm portion 20' which constitute the vacuum sheet-engaging members. These arms 20' are preferably fixedly mounted to the gears 83 or may be formed integral therewith. Each arm 20' is provided with a passageway 85 which registers with a passage 86 formed through the gears 83. A valve member 87 which is mounted in the hood 15' is provided with an axial bore 88 which is adapted to register with the orifice 86 in the gear 83 upon each revolution of the gear. The upper end of the shaft or valve body 87 is provided with a knurled knob 89 having a depending skirt which in turn is provided with an ear 90 adapted to register with a groove 91 formed in the member 15'. When it is desired to cut off communication between the passages 88 and 86, the knob 89 may be raised and the valve 87 rotated slightly so that the ear 90 rests upon the face of the casting 15'. When this valve adjustment has been made, an orifice 91 formed in the side of the valve body 87 will be moved out of register with a passage 92 in the member 15' and thus cut off communication between the passages 88 and 92. The passage 92 registers with a port 93 in the hollow shaft 19'. The hollow shafts 19' are connected together by a fluid conduit which in turn is connected to a suitable vacuum pump in a manner similar to that described in the other form of the invention.

A shaft 30', which constitutes one of the driven shafts of the machine, is provided with a gear 94 which meshes with an idler gear 95 to transmit a rotary motion to a gear 96 fixed to a shaft 97. The other end of the shaft is provided with a bevel gear 98 which meshes with a mating gear 99 which is fixedly mounted on a shaft 100. The shaft 100 has keyed thereto one of the gears 83 and thus rotation of the shaft 30 will effect rotation of all of the shafts of all of the gears 83 and 84. It is to be understod that a companion shaft 30' serves to drive the gears 83 and 84 in the opposite bank of openers 20'.

A conveyor 101 is positioned beneath the openers 20' and is supported by posts 102. The conveyor 101 is trained about suitable sprockets 103 which are rotatably mounted in plates 111 which are provided with flanged marginal portions adapted to support the conveyor chains 101. The chains 101 are driven through sprockets 103, which in turn are mounted on shafts 104 which extend upwardly and terminate in the casting 15'. A gear 105 is fixedly mounted to shaft 104 adjacent its upper extremity. This gear 105 meshes with an idler gear 106 which is also in mesh with a gear 83. Thus the chain will receive its continuous driving movement through gears 83, 106, 105, shaft 104, and sprockets 103.

A plurality of sheet-deflecting members 52' are mounted in spaced relationship along a groove 107 disposed longitudinally along the forward face of the hood 15'. The sheet-deflecting members 52' are positioned adjacent the path of travel of the vacuum sheet-engaging members 20' so as to form an abutment means which will direct the deflected sheet in a path rearwardly and below the next succeeding signature-engaging member 20'. The members 52' may be provided with signature-slitting knives 108 removably attached to the forward end of the members 52'. These signature slitter blades may be applied and utilized in the instance where the signature is of the closed end type.

A pair of blower bars 109 are mounted on brackets 110 which in turn are supported on plates 111. The bars 109 are angularly disposed with respect to a vertical plane and lie in spaced relationship parallel to the path of travel of a signa-

ture passing through the opener mechanisms. Each bar 109 is provided with a plurality of passages 112 which extend through the bar 109 and are in communication through tubes 113 with a fluid pressure pump such as described in the preceding form of the invention. The air supply for each passage 112 is controlled by a separate valve means so that a blast of air is directed obliquely against the leading edge of the signature as it approaches the adjacent vacuum signature-engaging member 20'.

The operation of this modified form of the signature openers is similar to the operation of the first described form insofar as the sheets are engaged and bend outwardly in succession, beginning with the outmost sheet of each signature. Signatures are delivered to a conveyor 12' in spaced relationship from any suitable signature feeding mechanism. Abutments formed on the conveyor 12' serve as impelling means to effect progress of the signature through the opener mechanisms. As in the other form of the invention, the signatures are guided between a plurality of pairs of bars 14' so as to retain the signature in upright position during its course of travel past the opener device. As the signature progresses in the direction of the arrow through Fig. 11, the outer sheet on one side of the signature is contacted by the rotating vacuum sheet-engaging member 20'. Valve means similar to that previously described becomes operative at this instant and a vacuum is established in the passage 85 of the signature-engaging member 20'. With the signature-engaging member in contact with the outer sheet of the signature and the vacuum operative, the outer sheet of the signature is bent outwardly away from the remaining sheets in the signature in the path of the rotating signature-engaging member 20'. The vacuum is cut off from the member 20' after the same has rotated through a portion of its travel. By this time the entire signature has advanced to the point where the leading edge of the signature abutment means 52' has already entered the opening formed between the outer sheet and the next adjacent sheet so that the outer sheet has now been displaced a sufficient distance to prevent contact or interference with the operation of the next succeeding vacuum sheet-engaging member 52 in the series on one side of the machine. As the signature passes the second opener, the same operations are performed and the second sheet will then lie adjacent the first sheet and the signature will then progress to effect the removal of succeeding sheets as the signature is carried past successive signature-engaging members. The identical series of operations will be simultaneously effected by the second series of openers disposed at the other side of the path of travel of the signature. In the event that all the vacuum signature-engaging members are active, four sheets will be removed from each side of the signature and the openers will thus effect a single central opening in a sixteen-page signature. In the event that it is found desirable to effect openings in other positions in the signature, the same may readily be obtained by raising individual knobs 89 and effecting partial rotation of the valves 87 to block communication in the vacuum line from the pump to the individual openers 20'. In this manner, the desired number of sheets may be bent outwardly from either or both sides of the signature and the opening or openings may be obtained in any pre-selected position, or between any desired pages of the signature. Where only a single sheet is to be opened from either side, the last three openers in that particular series should be rendered inoperative; where two sheets are desired to be bent outwardly to effect an opening between pages 4 and 5, or 12 and 13 only the last two openers in that particular series should be rendered inoperative. As the signature is progressing past the signature-engaging members 20' and sheet-deflecting members 52', it is periodically exposed to a blast of air from passages 112. This blast of air is preferably directed against the leading edge of the signature as it approaches the successive vacuum signature-engaging members so as to facilitate the separation of individual sheets by the vacuum signature-engaging members. In order to further facilitate proper opening of the signatures, the auxiliary conveyor chains 101 provide a gripping action on the signature to retain it in firm position during its travel past the openers. These auxiliary conveyor chains 101 also facilitate the operation of slitting the signature in the event that slitter blades 108 are fixed to the members 52'.

It will be understood from the preceding description that a new and improved signature opener has been provided wherein signatures may be progressed past opener mechanisms in either intermittent or constant motion, and that the signatures may be opened in one or more pre-selected places by the deflecting movement of successive sheets of the signature, beginning with the outermost sheet. It will also be understood that the vacuum signature-engaging members may be either fixedly or rotatably mounted in accordance with the teachings of either embodiment of the present invention disclosed in the accompanying drawings. The provision of manually operable means serves to provide a simple and effective manner for ready adjustment of the machine so that the signatures may be opened in desired places.

While no specific mention has been made of the disposition of the opened signatures, it is to be understood that they may be conveyed from this portion of the machine to either a stitcher or insetting machine.

While the invention has been described in considerable detail in the foregoing specification, it is to be understood that various changes may be made in its embodiments without departing from or sacrificing any of the advantages hereinafter claimed.

I claim:

1. Means for opening a closed signature or the like, comprising a plurality of movable sheet-engaging suction members arranged in sequence to one side of the signature to be opened, means for applying suction to said sheet-engaging members, means for progressing said signature past said sequence of sheet-engaging members so that the leaves of the signature commencing with the corresponding outer leaves are successively engaged and open outwards, and fluid pressure means disposed adjacent said suction members adapted to project a jet of air onto the leading edge of the signature.

2. Means for opening a closed signature or the like, comprising a plurality of movable sheet-engaging suction members arranged in sequence to one side of the signature, means for applying suction to said sheet-engaging members, means for progressing said signature past said sequence of sheet-engaging members so that the leaves of the signature commencing from the outer leaves are

successively deflected outwards from the center fold of the signature, and fluid pressure means disposed adjacent said suction members adapted to project a jet of air onto the leading edge of the signature.

3. Means for opening a closed signature or the like, comprising a plurality of rotatable sheet-engaging suction members arranged in sequence to one side of the signature to be opened, means for applying suction to said rotary sheet-engaging members and means for progressing said signature past said sequence of rotary sheet-engaging members so that the leaves of the signature, commencing with the corresponding outer leaf, are successively engaged and opened outwards.

4. Means for opening a closed signature or the like, comprising a plurality of rotary sheet-engaging suction members arranged in sequence to one side of the signature to be opened, a second series of rotary sheet-engaging members arranged in sequence to the opposite side of said signature, means for applying suction to said rotary sheet-engaging members, and means for progressing said signature past said sequence of sheet-engaging members so that the leaves of the signature commencing from the outer leaf are successively deflected outwards from the center fold of the signature.

5. Means for opening a closed signature or the like, comprising a plurality of rotatable sheet-engaging suction members arranged in sequence to one side of the signature to be opened, means for applying suction to said rotary sheet-engaging members, means for progressing said signature past said sequence of rotary sheet-engaging members so that the leaves of the signature commencing with the corresponding outer leaf are successively engaged and opened outwards, and fluid pressure means disposed adjacent said suction members adapted to project a jet of air onto the leading edge of the signature.

6. Means for opening a closed signature or the like, comprising a plurality of rotary sheet-engaging suction members arranged in sequence to one side of the signature to be opened, a second series of rotary sheet-engaging members arranged in sequence to the opposite side of said signature, means for applying suction to said rotary sheet-engaging members, means for progressing said signature past said sequence of sheet-engaging members so that the leaves of the signature commencing from the outer leaf are successively deflected outwards from the center fold of the signature, and fluid pressure means disposed adjacent said suction members adapted to project a jet of air onto the leading edge of the signature.

7. A method of automatically opening a closed signature or the like which comprises signature impelling means and a series of movable signature-engaging means adapted to selectively engage and deflect individual sheets of the signature outwardly to form an opening in the signature.

8. Means for opening a closed signature or the like, comprising a signature guideway, means for impelling a signature along said guideway, and a series of movable signature-engaging elements disposed adjacent said guideway, said elements adapted to deflect individual sheets of the signature outwardly to form an opening in the signature.

9. Means for opening a closed signature or the like comprising a signature guideway, means for impelling a signature along said guideway, a series of rotary signature-engaging elements disposed adjacent said guideway, vacuum means associated with said rotary signature-engaging elements, abutment means adapted to deflect sheets engaged by said sheet-engaging member, said abutment means adapted to form an opening in said signature and displacing said engaged sheet whereby the next succeeding sheet-engaging member is adapted to engage the next successive sheet in said signature to effect additional opening in the signature.

10. A signature opening mechanism comprising a conveyor adapted to receive and support a succession of individual signatures in upright position, means for driving said conveyor, a plurality of guide elements disposed adjacent and above said conveyor, said elements adapted to maintain the signatures in upright position, a plurality of movable sheet-engaging suction members disposed to one side of the path of travel of the signatures and below the upper edge of the signatures, and means for effecting movement of said suction members in synchronism with the advance of said conveyor, whereby said sheet-engaging suction members successively contact the outer sheet of each advancing signature, withdraw from the signature and thereby deflect the outer sheet from the remaining sheets to form an opening in the signature.

11. A signature opening mechanism comprising a conveyor adapted to receive and support a succession of individual signatures in upright position, means for driving said conveyor, a plurality of guide elements disposed adjacent and above said conveyor, said elements adapted to maintain the signatures in upright position, a plurality of movable sheet-engaging suction members disposed on each side of the path of travel of the signatures and below the upper edge of the signatures, and means for effecting movement of said suction members in synchronism with the advance of said conveyor, whereby said sheet-engaging suction members on each side of the signature successively contact the outer sheet of each advancing signature, withdraw from the signature and thereby deflect the outer sheet on each side from the remaining sheets to form an opening in the signature on each side of its center fold.

12. A signature opening mechanism comprising a conveyor adapted to receive and support a succession of individual signatures in upright position, means for driving said conveyor, a plurality of guide elements disposed adjacent and above said conveyor, said elements adapted to maintain the signatures in upright position, a plurality of pairs of rockable sheet-engaging suction members disposed on opposite sides of the path of travel of the signatures and below the upper edge of the signatures, and means for effecting movement of said suction members in synchronism with the advance of said conveyor, whereby said sheet-engaging suction members on each side of the signature successively contact the outer sheet of each advancing signature, withdraw from the signature and thereby deflect the outer sheet on each side from the remaining sheets to form an opening in the signature on each side of its center fold.

13. A signature opening mechanism comprising a conveyor adapted to receive and support a succession of individual signatures in upright position, means for driving said conveyor, a plurality of guide elements disposed adjacent and above said conveyor, said elements adapted to maintain the signatures in upright position, a plurality of

movable sheet-engaging suction members disposed to one side of the path of travel of the signatures and below the upper edge of the signatures, means for effecting movement of said suction members in synchronism with the advance of said conveyor, whereby said sheet-engaging suction members successively contact the outer sheet of each advancing signature, withdraw from the signature and thereby deflect the outer sheet from the remaining sheets to form an opening in the signature, and a fixed sheet-deflecting element lying adjacent each of said movable suction members, said fixed element adapted to contact and retain the deflected sheet out of contact and interference with the operation of the next succeeding movable suction member.

14. A signature opening mechanism comprising a conveyor adapted to receive and support a succession of individual signatures in upright position, means for driving said conveyor, a plurality of guide elements disposed adjacent and above said conveyor, said elements adapted to maintain the signatures in upright position, a plurality of movable sheet-engaging suction members disposed to one side of the path of travel of the signatures and below the upper edge of the signatures, means for effecting movement of said suction members in synchronism with the advance of said conveyor, whereby said sheet-engaging suction members successively contact the outer sheet of each advancing signature, withdraw from the signature and thereby deflect the outer sheet from the remaining sheets to form an opening in the signature, a fixed sheet-deflecting element lying adjacent each of said movable suction members, said fixed element adapted to contact and retain the deflected sheet in open position, a movable gate member adjacent said fixed sheet-deflecting element adapted to move and retain the deflected sheet out of contact with the next succeeding movable suction member, and means for moving said gate member.

15. A signature opening mechanism comprising a conveyor adapted to receive and support a succession of individual signatures in upright position, means for driving said conveyor, a plurality of guide elements disposed adjacent and above said conveyor, said elements adapted to maintain the signatures in upright position, a plurality of movable sheet-engaging suction members disposed to one side of the path of travel of the signatures and below the upper edge of the signatures, a vacuum source, an air conduit connecting said vacuum source with said sheet-engaging suction members, and a valve mechanism in said air conduit, means for intermittently connecting and disconnecting communication between said vacuum source and said suction members, and means for effecting movement of said suction members in synchronism with the advance of said conveyor, whereby said energized sheet-engaging suction members successively contact the outer sheet of each advancing signature, withdraw from the signature and thereby deflect the outer sheet from the remaining sheets to form an opening in the signature.

16. A signature opening mechanism comprising, a conveyor adapted to receive and support a succession of individual signatures in upright position, means for driving said conveyor, a plurality of guide elements disposed adjacent and above said conveyor, said elements adapted to maintain the signatures in upright position, a plurality of rockable sheet-engaging suction members disposed on opposite sides of the path of travel of the signatures, cam means for effecting the rocking movement of said suction members in synchronism with the advance of said conveyor, a vacuum source, an air conduit connecting said vacuum source with said sheet-engaging suction members, and a valve mechanism in said air conduit, means for intermittently connecting and disconnecting communication between said vacuum source and said suction members, whereby said energized suction members successively contact the outer sheet of each advancing signature and withdraw it from the remaining sheets to form an opening in the signature.

17. A signature opening mechanism, comprising, a conveyor adapted to receive and support a succession of individual signatures in upright position, means for driving said conveyor, a plurality of guide elements disposed adjacent and above said conveyor adapted to maintain the signatures in upright position, a plurality of rotatable sheet-engaging suction members disposed on one side of the path of travel of the signatures and adjacent their upper edge, and means for effecting rotation of said members in synchronism with the advance of said conveyor, whereby said rotatable sheet-engaging suction members successively contact the outer sheet of each advancing signature and deflect the same outwardly to form an opening in the signature.

18. A signature opening mechanism, comprising, a conveyor adapted to receive and support a succession of individual signatures in upright position, means for driving said conveyor, a plurality of guide elements disposed adjacent and above said conveyor adapted to maintain the signatures in upright position, a plurality of rotatable sheet-engaging suction members disposed on opposite sides of the path of travel of the signatures and adjacent their upper edge, and means for effecting rotation of said members in synchronism with the advance of said conveyor, whereby said rotatable sheet-engaging members on one side of the signature successively contact the outermost sheet of each advancing signature on that side and deflect it outwardly to form an opening in the signature and whereby the similar members on the opposite side of the signature effect the same operation.

19. A signature opening mechanism, comprising, a conveyor adapted to receive and support a succession of individual signatures in upright position, means for driving said conveyor, a plurality of guide elements disposed adjacent and above said conveyor adapted to maintain the signatures in upright position, a plurality of rotatable sheet-engaging suction members disposed on one side of the path of travel of the signatures and adjacent their upper edge, means for effecting rotation of said members in synchronism with the advance of said conveyor, whereby said rotatable sheet-engaging suction members successively contact the outer sheet of each advancing signature and deflect the same outwardly to form an opening in the signature, and a fixed sheet-deflecting element lying adjacent each of said rotatable members, said fixed element adapted to contact and retain the deflected sheet out of contact and interference with the operation of the next successive rotatable member.

20. A signature opening mechanism, comprising, a conveyor adapted to receive and support a succession of individual signatures in upright position, means for driving said conveyor, a plurality of guide elements disposed adjacent and

above said conveyor adapted to maintain the signatures in upright position, a plurality of rotatable sheet-engaging suction members disposed on opposite sides of the path of travel of the signatures and adjacent their upper edge, means for effecting rotation of said members in synchronism with the advance of said conveyor, whereby said rotatable sheet-engaging suction members on one side of the signature successively contact the outermost sheet of each advancing signature on that side and deflect it outwardly to form an opening in the signature and whereby the similar members on the opposite side of the signature effect the same operation, and a fixed sheet-deflecting element lying adjacent each of said rotatable members, said fixed element adapted to contact and retain the deflected sheet out of contact and interference with the operation of the next successive rotatable member.

21. A signature opening mechanism, comprising, a conveyor adapted to receive and support a succession of individual signatures in upright position, means for driving sad conveyor, a plurality of guide elements disposed adjacent and above said conveyor adapted to maintain the signatures in upright position, a plurality of rotatable sheet-engaging suction members disposed on one side of the path of travel of the signatures and adjacent their upper edge, means for effecting rotation of said members in synchronism with the advance of said conveyor, whereby said rotatable sheet-engaging suction members successively contact the outer sheet of each advancing signature and deflect the same outwardly to form an opening in the signature, and means for rendering individual rotatable sheet-engaging members inoperative, thereby controlling the number of sheets deflected as the signature passes through said signature opening mechanism.

22. A signature opening mechanism, comprising, a conveyor adapted to receive and support a succession of individual signatures in upright position, means for driving said conveyor, a plurality of guide elements disposed adjacent and above said conveyor adapted to maintain the signatures in upright position, a plurality of rotatable sheet-engaging suction members disposed on opposite sides of the path of travel of the signatures and adjacent their upper edge, means for effecting rotation of said members in synchronism with the advance of said conveyor, whereby said rotatable sheet-engaging suction members on one side of the signature successively contact the outermost sheet of each advancing signature on that side and deflect it outwardly to form an opening in the signature and whereby the similar members on the opposite side of the signature effect the same operation, and means for rendering individual rotatable sheet-engaging members inoperative, thereby controlling the number of sheets deflected on each side of the signature as it passes through said signature opening mechanism.

23. A signature opening mechanism, comprising, a conveyor adapted to receive and support a succession of individual signatures in upright position, means for driving said conveyor, a plurality of guide elements disposed adjacent and above said conveyor adapted to maintain the signatures in upright position, a plurality of rotatable sheet-engaging suction members disposed on one side of the path of travel of the signatures and adjacent their upper edge, and means for effecting rotation of said members in synchronism with the advance of said conveyor, whereby said rotatable sheet-engaging suction members successively contact the outer sheet of each advancing signature and deflect the same outwardly to form an opening in the signature, means for rendering individual rotatable sheet-engaging members inoperative, thereby controlling the number of sheets deflected as the signature passes through said signature opening mechanism, and a fixed sheet-deflecting element lying adjacent each of said rotatable members, said fixed element adapted to contact and retain the deflected sheet out of contact and interference with the operation of the next successive rotatable member.

24. A signature opening mechanism, comprising, a conveyor adapted to receive and support a succession of individual signatures in upright position, means for driving said conveyor, a plurality of guide elements disposed adjacent and above said conveyor adapted to maintain the signatures in upright position, a plurality of rotatable sheet-engaging suction members disposed on opposite sides of the path of travel of the signatures and adjacent their upper edge, and means for effecting rotation of said members in synchronism with the advance of said conveyor, whereby said rotatable sheet-engaging members on one side of the signature successively contact the outermost sheet of each advancing signature on that side and deflect it outwardly to form an opening in the signature and whereby the similar members on the opposite side of the signature effect the same operation, means for rendering individual rotatable sheet-engaging members inoperative, thereby controlling the number of sheets deflected on each side of the signature as it passes through said signature opening mechanism, and a fixed sheet-deflecting element lying adjacent each of said rotatable members, said fixed element adapted to contact and retain the deflected sheet out of contact and interference with the operation of the next successive rotatable member.

25. A signature opening mechanism, comprising, a conveyor adapted to receive and support a succession of individual signatures in upright position, means for driving said conveyor, a plurality of guide elements disposed adjacent and above said conveyor adapted to maintain the signatures in upright position, a plurality of rotatable sheet-engaging suction members disposed on opposite sides of the path of travel of the signatures and adjacent their upper edge, a blower bar disposed adjacent the path of travel of the signature, said blower bar being provided with an orifice directed toward said rotatable members, means for effecting rotation of said members in synchronism with the advance of said conveyor, a source of air pressure, an air conduit connecting said air pressure source and said blower bar, and means for intermittently establishing said communication to direct a jet of air toward the oncoming signature to facilitate the opening thereof, whereby said rotatable sheet-engaging suction members successively contact the outer sheet of each advancing signature and deflect the same outwardly to form an opening in the signature.

26. A signature opening mechanism, comprising a conveyor adapted to receive and support a succession of individual signatures in upright position, means for driving said conveyor, a plurality of guide elements disposed adjacent and above said conveyor adapted to maintain the signatures in upright position, a plurality of rotat-

able members disposed on opposite sides of the path of travel of the signatures and adjacent and below their upper edge, means for rotating said members in synchronism with the advance of said conveyor, a sheet-engaging suction element on each of said rotatable members, said suction elements adapted to contact the outer sheet of each advancing signature and deflect the same outwardly to form an opening in the signature, a vacuum source, an air conduit connecting said vacuum source with said sheet-engaging suction element, and means associated with each of said suction elements to independently and selectively render them ineffective to open a signature by breaking communication with said vacuum source.

27. A signature opening mechanism, comprising a conveyor adapted to receive and support a succession of individual signatures in upright position, means for driving said conveyor, a plurality of guide elements disposed adjacent and above said conveyor adapted to maintain the signatures in upright position, a plurality of rotatable members disposed on opposite sides of the path of travel of the signatures and adjacent and below their upper edge, means for rotating said members in synchronism with the advance of said conveyor, a sheet-engaging suction element on each of said rotatable members, said suction elements adapted to contact the outer sheet of each advancing signature and deflect the same outwardly to form an opening in the signature, a fixed sheet-deflecting element lying adjacent each of said rotatable members, said fixed element adapted to contact and retain the deflected sheet out of contact and interference with the operation of the next successive rotatable member, a vacuum source, an air conduit connecting said vacuum source with said sheet-engaging suction element, and means associated with each of said suction elements to independently and selectively render them ineffective to open a signature by breaking communication with said vacuum source.

28. A signature opening mechanism, comprising a conveyor adapted to receive and support a succession of individual signatures in upright position, means for driving said conveyor, a plurality of guide elements disposed adjacent and above said conveyor adapted to maintain the signatures in upright position, a plurality of rotatable members disposed on opposite sides of the path of travel of the signatures and adjacent and below their upper edge, means for rotating said members in synchronism with the advance of said conveyor, a sheet-engaging suction element on each of said rotatable members, a blower bar disposed adjacent the path of travel of the signature, said blower bar being provided with a plurality of spaced orifices directed toward said rotatable members, a source of air pressure, an air conduit connecting said pressure source with said blower bar, said suction elements adapted to contact the outer sheet of each advancing signature and deflect the same outwardly to form an opening in the signature, a vacuum source, an air conduit connecting said vacuum source with said sheet-engaging suction element, means for intermittently establishing said communication between said pressure source and said blower bar to direct a jet of air toward the oncoming signature to facilitate opening thereof, and means associated with each of said suction elements to independently and selectively render them ineffective to open a signature by breaking communication with said vacuum source.

MARTIN CHRISTENSEN.