April 2, 1940. A. CLARKSON 2,195,617

OIL BURNER

Filed Nov. 15, 1937 2 Sheets-Sheet 1

Fig. 1.

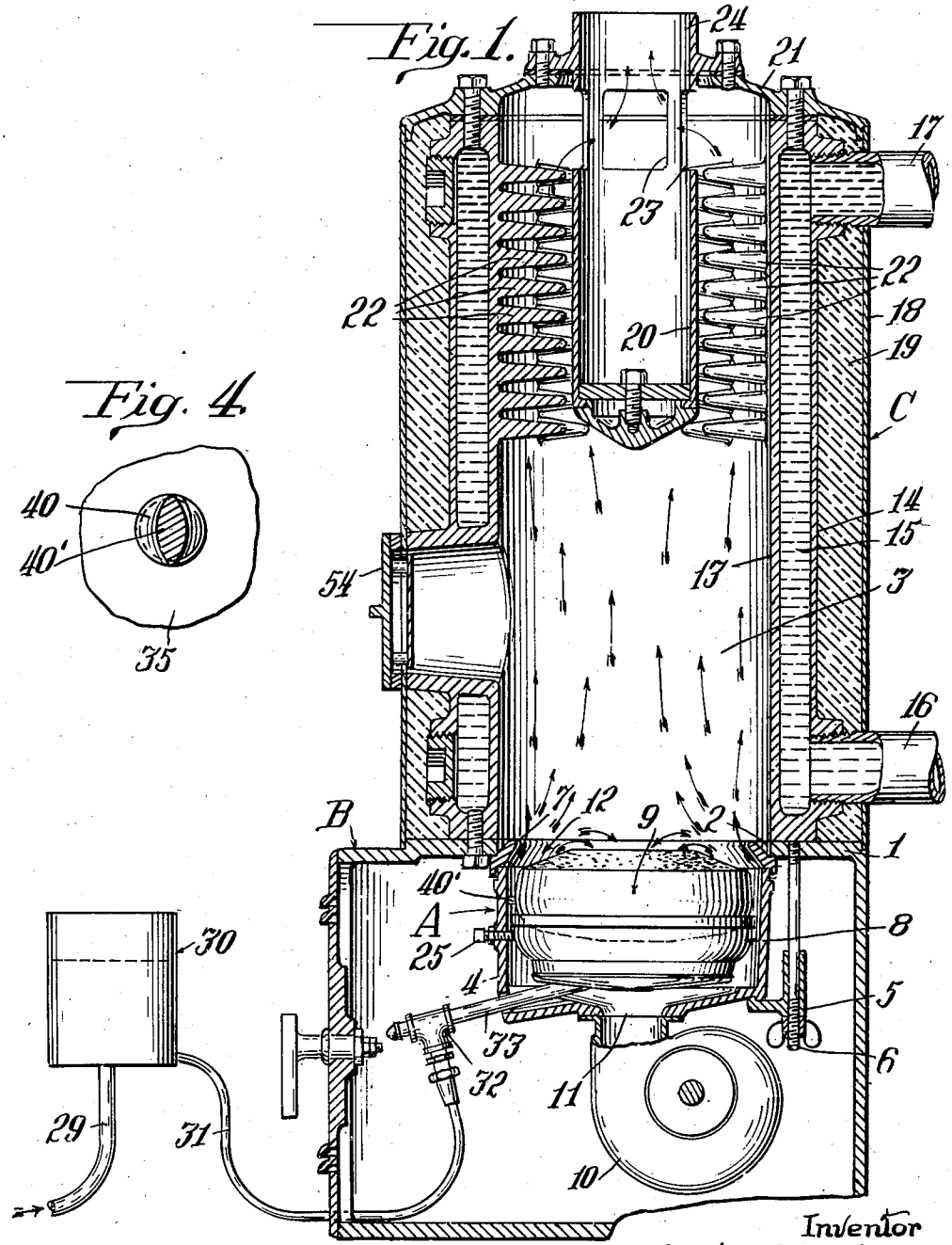

Fig. 4.

Inventor

Alick Clarkson

By Barnett & Truman

Attorneys.

April 2, 1940. A. CLARKSON 2,195,617

OIL BURNER

Filed Nov. 15, 1937 2 Sheets-Sheet 2

Fig. 2.

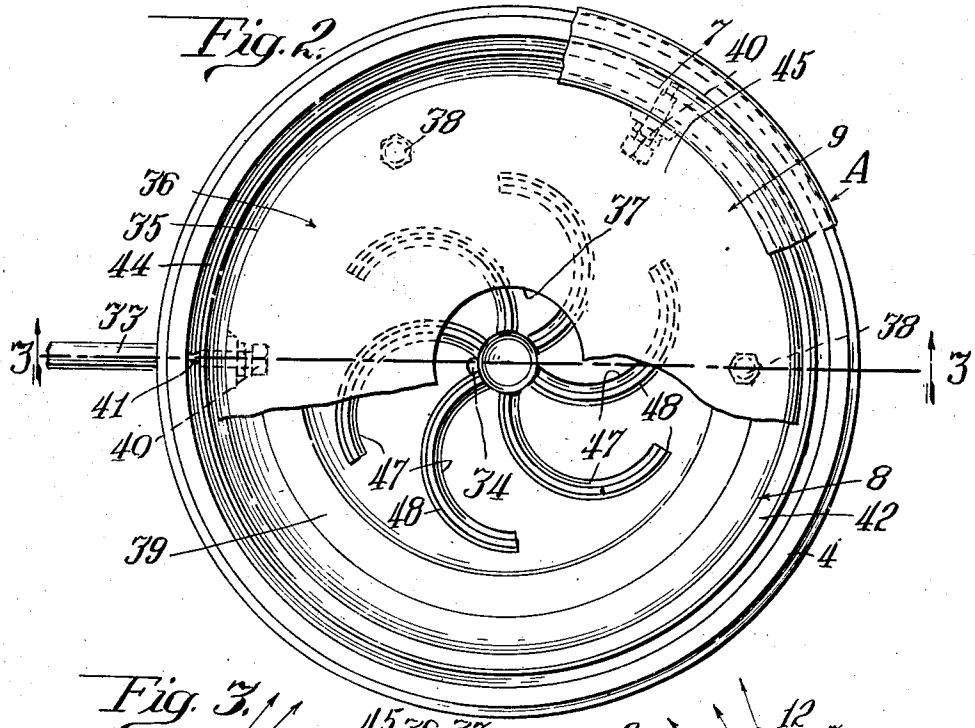

Fig. 3.

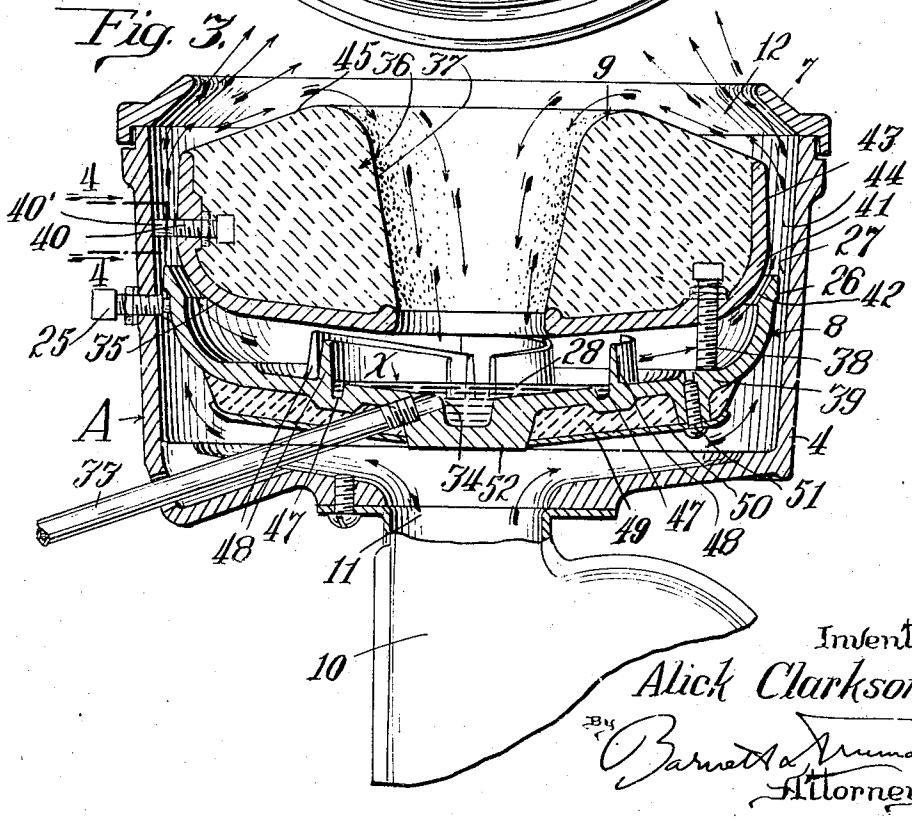

Inventor
Alick Clarkson
By Barnett & Truman
Attorneys

Patented Apr. 2, 1940 2,195,617

UNITED STATES PATENT OFFICE

2,195,617

OIL BURNER

Alick Clarkson, Elmhurst, Ill.

Application November 15, 1937, Serial No. 174,675

8 Claims. (Cl. 158—53)

This invention relates to certain new and useful improvements in an oil burner, and more particularly to an improved process and apparatus for burning medium grades of liquid fuel, such as Diesel fuel oil, with a blue clean flame that has an outer envelope of air so that carbon is not formed when the flame is apparently in contact with cold metal surfaces.

Briefly described, the apparatus comprises means for circulating hot non-combustible gases (preferably a small portion of the hot products of combustion from the combustion zone) in intimate contact with the liquid fuel, preferably in contact with the surface of an exposed shallow pool of the liquid fuel so as to vaporize a portion of the fuel and carry this vapor back to the combustion zone. More specifically the combustion air is caused to flow through the apparatus in such a manner as to enforce the circulation of the heated gases and flow with these gases to the combustion zone, while at the same time forming an outer envelope of air around the combustion zone to protect the metal surfaces.

The principal object of this invention is to provide an improved oil burning apparatus of the type briefly described hereinabove and disclosed more in detail in the specifications which follow.

Another object is to provide an improved means for burning medium grades of liquid fuel.

Another object is to provide means for vaporizing heavy liquid fuel by passing hot gases incapable of supporting combustion in intimate surface contact with the liquid.

Another object is to provide improved means for causing an equalized distribution of the hot gases in contact with the surface of the liquid fuel.

Another object is to provide means for maintaining the oil inlet below the carbonizing temperature.

Another object is to provide improved means for cooling those portions of the burner assembly where the direct application of heat is undesirable.

Other objects and advantages of this invention will be more apparent from the following detailed description of one approved form of apparatus constructed and operating according to the principles of this invention.

In the accompanying drawings:

Fig. 1 is a central vertical section through an assembly for heating water, with the improved burner used in combination therewith, the housing of the burner being shown in vertical section and the interior members in elevation.

Fig. 2 is a plan view of the burner assembly on a larger scale, portions being broken away.

Fig. 3 is a central vertical section through the burner assembly taken substantially on the line 3—3 of Fig. 2.

Fig. 4 is a detail vertical section taken substantially on the line 4—4 of Fig. 3 but on a larger scale.

Referring first to Fig. 1, the burner assembly indicated generally at A is supported within the casing or standard B on which is carried the hot-water heater C. The top wall 1 of casing B is provided with an opening 2 communicating with the heating space 3 within the boiler or water heater C. The outer shell or housing 4 of the burner assembly A is suspended by a plurality of brackets or hooks 5 carried by bolts 6 projecting downwardly from the top wall 1 of casing B in such a manner as to clamp the deflector ring 7 between the upper edge of housing 4 and wall 1. The oil-pan 8 and baffle member 9 are centrally supported within housing 4 (as hereinafter described more in detail), and the blower 10 suitably supported within the lower portion of casing B forces air through the opening 11 in the bottom of housing 4 and thence around pan 8 and baffle 9 to the mixing and combustion zone 12 between deflector ring 7 and the top of baffle 9. In this zone the air mixed with vaporized fuel is ignited and the products of combustion are directed inwardly and upwardly as indicated by the arrows through heating chamber 3. A small portion of these heated gases are drawn inwardly and downwardly through baffle 9 (as hereinafter described) in order to vaporize the oil.

The water-heater C comprises an inner shell 13 surrounding heating chamber 3, and an outer shell 14, and the water to be heated is confined in the annular space 15 between shells 13 and 14. The cold water flows in through a lower pipe 16 and the heated water is drawn off through an upper pipe 17. The assembly is enclosed by an outer shell or covering 18, and the space between shells 14 and 18 is filled with suitable insulation 19 so as to minimize the heat loss.

A deflector tube 20 is supported by the cover plate 21 and projects centrally downward into heater chamber 3. A plurality of fingers or other projections 22 extend inwardly from the wall of inner casing 13 toward deflector tube 20 so as to provide an extended heat-transfer surface. The heated gases must flow upwardly through the annular space into which members 22 project so that a maximum of heat is trans-

ferred to casing 13 and thence to the water in space 15. The gases, thus relieved of the greater portion of their heat, then flow inwardly through ports 23 in the upper portion of tube 20 and out through passage 24.

It will be understood that this particular type of hot-water heater forms no part of the present invention and is merely shown as one example of a suitable apparatus to be heated by the burner assembly A which will now be described more in detail, referring also to Figs. 2 and 3.

The pan 8 which holds the liquid fuel is of shallow dished formation and is supported within the lower portion of housing 4 by a plurality of adjustable screws 25 projecting through the side walls of the housing and engaging the pan beneath the outstanding flange 26 at its upper edge. The pan will be centered within the housing so as to provide a small annular passage 27 through which the air forced into the lower portion of housing 4 through opening 11 flows upwardly. A shallow pool of oil or other liquid fuel 28 is maintained within pan 8, this pool being kept at a substantially constant level as indicated at x. The oil is supplied through pipe 29 (see Fig. 1) from a constant source of supply to a suitable float-trap 30 in which a small supply of oil at constant level is maintained. The oil is delivered from device 30 through pipe 31, metering valve 32, and pipe 33, extending through the lower portions of housing 4 and pan 8 into the well 34 at the center of pool 28. The specific construction of pan 8 will be described more in detail hereinafter when the reasons therefor become more apparent.

The baffle member 9 is of annular form and comprises a metallic bowl-shaped shell 35 which encloses the bottom and outer side of the annulus, and an inner block 36 of refractory material formed with a central vertically extending opening 37. The baffle is supported in spaced relation above the pan 8 by means of a plurality of bolts 38 screwed downwardly through shell 35 and resting on an annular shelf 39 formed within the pan. The baffle is properly centered within housing 4 by means of a plurality (usually three) of adjustable bolts 40 threaded through the side walls of shell 35 and engaging the inner surface of housing 4. The baffle is constructed by first inserting shell 35 within the housing and properly adjusting the bolts 38 and 40. Shell 35 is then removed and the refractory block 36 cast within the shell over the bolt heads. This is a simple and convenient manner of properly and permanently centering the baffle within the assembly.

The lower surface of the metallic baffle-shell or bowl 35 slopes outwardly and upwardly from the central opening 37 at substantially the same inclination as the pan 8, and is then rounded upwardly at 41 to provide a passage 42 between the lower surface of the baffle and the upper edge portion of pan 8. The baffle shell then extends upwardly and is inclined slightly inwardly at 43, whereas the housing 4 inclines outwardly so that the passage 44 between the baffle and housing has its narrowest portion directly above the juncture of the passages 27 and 42 and then flares or expands towards its top to provide an annular venturi. The air forced upwardly through passage 27 from beneath the pan and projected into this venturi will exert a suction through passage 42 so as to draw gases from the space between the pan and baffle. The upper surface 45 of the refractory block 36 of the baffle inclines upwardly and inwardly so as to provide an annular flaring mixing chamber and combustion zone 12. It is in this space or zone that the vaporized fuel and air combine, that is where the ignition and combustion takes place.

Returning now to the description of pan 8, the upper surface thereof is provided with a circular series of grooves 47 extending radially, or more preferably curved all in the same direction from the central well 34. Just outside of these grooves are curved upstanding vanes 48 which at their higher outer ends may extend nearly into contact with the lower surface of baffle 9. The purpose of these vanes is to provide an extended heat-absorbing surface to expedite the vaporization of the oil, and also to impart a whirling movement and more equal distribution to the hot gases which are drawn downwardly onto the surface of the oil-pool 28, and the vanes 48 and grooves 47 cooperate to produce an equalized distribution of vaporized fuel in the gas stream which is drawn outwardly through passage 42 into the venturi 44.

An annular layer of refractory insulating material 49 is held against the lower surface of the pan by means of a metallic cover plate 50 held in place by screws 51. This insulation tends to retain the heat applied by the hot gases to the upper surface of the shallow pool. However, it will be noted that the central portion 52 of the pan, which encloses the central well 34, is directly exposed to the cooling blast of air forced up from blower 10 so that this portion of the pan and oil-well will be maintained at a lower temperature, and the air blast also tends to cool the inlet pipe 33. In this manner the oil-inlet is maintained at a sufficiently low temperature to prevent carbonization at this point. The air stream also tends to cool the outer upwardly extending rim portion of pan 8.

In operation, combustion takes place in the zone 12 as already described, the greater portion of the hot combustion gases being drawn upwardly through the heating chamber 3 (Fig. 1), but a small portion of these hot combustion gases are drawn downwardly through the central opening 37 in the baffle as indicated by the arrows in Fig. 3. These hot gases are caused to whirl over the surface of the liquid pool and vaporize a portion of the liquid fuel, these gases along with the vaporized fuel being drawn out through annular passage 42 between the baffle and pan and carried upwardly with the air stream through the Venturi passage 44 to the combustion zone 12. In this annular Venturi passage 44 the air stream follows the outer wall of housing 4 and the stratification or separation of the air and fuel is maintained to such an extent that ignition does not take place in this passage. It is only when the fuel and air reaches the expanded combustion zone 12 that the fluids mix and combustion takes place. The hot gases drawn down through central opening 37 are practically non-combustible, that is, contain so little oxygen that no combustion can be supported in the space above the oil-pan where the vaporization of the fuel is accomplished.

It will be noted that an envelope of the relatively cold combustion air flows along the inner surface of housing 4 and deflector ring 7 so as to protect these metal surfaces and minimize carbonizing along these surfaces. The surfaces of the refractory block 36 are exposed to the greatest heat, and the only metal parts that will be highly heated are the upper surface of pan 8 and the extended heat absorption surface furnished

by vanes 48 so as to facilitate the vaporization of the oil. While a relatively high temperature will exist above this oil pan combustion cannot take place due to the absence of oxygen in this zone.

The vaporized fuel will burn in the zone 12 with a blue clean flame, and due to the outer envelope of air relatively no carbon will be formed on the metal surfaces although the flame is apparently in contact therewith.

In order to minimize the mixing of the fluid streams and present as little obstruction as possible to the flow of these fluids through the annular venturi 44, the outer end portions of bolts 40 are preferably "stream lined" or cut away as best shown at 40' in Fig. 4.

With blower 10 in operation, the burner can be ignited by removing door 54 of the water-heater (see Fig. 1) and applying a suitable torch to the gases above the burner. While combustion will at first take place above the pool, this will soon be extinguished by the non-combustible gases drawn down through central opening 37. Thereafter practically no air will circulate around baffle 9 and between the baffle and pan 8.

According to this improved process of burning oil, the fuel is separately and successively (1) completely vaporized by hot non-combustible gases, (2) then carried by these gases into contact with the air, (3) then mixed with this combustion air, (4) and then ignited. This permits a closer control of the amount of air used and complete combustion can be obtained without the necessity of adding excessive quantities of air, as is usually necessary when the liquid is burned directly without preliminary vaporization.

I claim:

1. A liquid fuel burner comprising a housing, a pan positioned within the lower portion of the housing, means for feeding liquid fuel to the pan so as to maintain an exposed shallow pool of substantially constant level therein, an annular baffle member positioned above the pan and centered within the housing so as to provide a narrow annular passage between the baffle and housing, the upper end of the housing terminating in an annular inwardly projecting deflector ring providing an annular inwardly and upwardly expanded mixing and combustion zone above the baffle, and means for forcing air from the lower portion of the housing beneath the pan upwardly through the annular passage to the combustion zone, the suction of the air stream through the passage causing a circulation of a portion of the hot combustion gases from the combustion zone over the baffle member and downwardly through the central opening in the baffle, thence outwardly over the liquid pool and back together with vaporized oil through the annular passage to the combustion zone.

2. A liquid fuel burner comprising a housing, a pan positioned within the lower portion of the housing, means for feeding liquid fuel to the pan so as to maintain an exposed shallow pool of substantially constant level therein, an annular baffle member positioned above the pan and centered within the housing so as to provide a narrow annular passage between the baffle and housing, the upper end of the housing terminating in an annular inwardly projecting deflector ring providing an annular mixing and combustion zone above the baffle, and means for forcing air upwardly through the annular passage to the combustion zone, the suction of the air stream through the passage causing a circulation of a portion of the hot combustion gases around the baffle member from the combustion zone through the central opening in the baffle, over the liquid pool and back through the annular passage to the combustion zone, the upper surface of the pan being provided with a plurality of curved grooves to distribute the liquid, and a plurality of curved vanes projecting above the pool adjacent the grooves.

3. A liquid fuel burner comprising a housing, a pan positioned within the lower portion of the housing, means for feeding liquid fuel to the pan so as to maintain an exposed shallow pool of substantially constant level therein, an annular baffle member positioned above the pan and centered within the housing so as to provide a narrow annular passage between the baffle and housing, the upper end of the housing terminating in an annular inwardly projecting deflector ring providing an annular mixing and combustion zone above the baffle, and means for forcing air upwardly through the annular passage to the combustion zone, the suction of the air stream through the passage causing a circulation of a portion of the hot combustion gases around the baffle member from the combustion zone through the central opening in the baffle, over the liquid pool and back through the annular passage to the combustion zone, the upper surface of the pan being provided with a plurality of curved vanes projecting above the liquid pool.

4. A liquid fuel burner comprising a housing, a pan positioned within the lower portion of the housing, means for feeding liquid fuel to the pan so as to maintain an exposed shallow pool of substantially constant level therein, an annular baffle member positioned above the pan and centered within the housing so as to provide a narrow annular passage between the baffle and housing, the upper end of the housing terminating in an annular inwardly projecting deflector ring providing an annular mixing and combustion zone above the baffle, means for forcing air upwardly through the annular passage to the combustion zone, the suction of the air stream through the passage causing a circulation of a portion of the hot combustion gases around the baffle member from the combustion zone through the central opening in the baffle, over the liquid pool and back through the annular passage to the combustion zone, and means positioned between the pan and the lower surface of the baffle to cause a whirling distribution of the hot gases above the pool.

5. A liquid fuel burner comprising a housing, a pan positioned within the housing, means for feeding liquid fuel to the pan so as to maintain an exposed shallow pool of substantially constant level therein, a baffle member positioned above the pan, means for forcing air upwardly around the pan and baffle to an upper combustion zone and thereby drawing hot non-combustible gases over the surface of the pool between the pan and baffle, the upper surface of the pan being formed with upwardly projecting vanes to increase the heat-transfer surface and distribute the hot gases in contact with the pool.

6. A liquid fuel burner comprising a housing, a pan positioned within the housing, means for feeding liquid fuel to the pan so as to maintain an exposed shallow pool of substantially constant level therein, a baffle member positioned above the pan, means for forcing air upwardly around the pan and baffle to an upper combustion zone and thereby drawing hot non-com-

bustible gases over the surface of the pool between the pan and baffle, the lower surface of the pan beneath the pool being partially insulated to conserve the vaporizing heat transferred from the hot gases, but the portion beneath the liquid inlet being exposed to the cooling action of the incoming air stream.

7. A liquid fuel burner comprising a housing, a pan positioned within the housing, means for feeding liquid fuel to the pan so as to maintain an exposed shallow pool therein, a baffle member positioned above the pan, means for forcing air upwardly around the pan and baffle to an upper combustion zone and thereby drawing hot gases over the surface of the pool between the pan and baffle, the baffle comprising a metallic bowl having a central bottom opening, a plurality of screw bolts adjustably projecting through the bowl walls and adapted to center the bowl within the housing and support the bowl in spaced relation above the pan, and an annular refractory body cast within the bowl over the bolt-heads, the central opening in the refractory body registering with the central opening in the bowl and forming a passage for the hot gases.

8. A liquid fuel burner comprising a housing having an upwardly projecting annular side wall, a pan centrally positioned within the lower portion of the housing so as to provide a narrow annular air passage between the pan and the side wall of the housing, means for feeding liquid fuel to the pan so as to maintain an exposed shallow pool of substantially constant level therein, an annular baffle member positioned above the pan and centered above the housing so as to provide an annular air passage between the baffle and the side wall of the housing as a continuation of the first mentioned annular passage, the upper surface of the baffle sloping upwardly and inwardly, and the upper end of the housing terminating in a deflector ring sloping upwardly and inwardly at a greater angle than the opposed surface of the baffle so as to provide a diverging annular mixing and combustion zone above the baffle, and means for forcing air into the lower portion of the housing and thence upwardly through the annular air passage to the combustion zone, this annular air stream causing a circulation of a portion of the combustion gases around the baffle member from the combustion zone downwardly through the central opening in the baffle, over the liquid pool and thence along with oil vaporized by the gases upwardly through the annular passage between the air stream and baffle back to the mixing and combustion zone.

ALICK CLARKSON.