US 20060003125A1

(19) United States

(12) Patent Application Publication

(10) Pub. No.: US 2006/0003125 A1

(43) Pub. Date: Jan. 5, 2006

Hult

(54) ABRASION ALERT SLEEVES AND SLEEVE ASSEMBLIES, AND METHODS OF USING SAME

(76) Inventor: **Greg E. Hult**, Los Alamitos, CA (US)

Correspondence Address:
HEIMBECHER & ASSOCIATES, LLC.
390 UNION BLVD
SUITE 650
LAKEWOOD, CO 80228-6512 (US)

(21) Appl. No.: **10/884,775**

(22) Filed: **Jul. 1, 2004**

Publication Classification

(51) **Int. Cl.**
B65D 1/00 (2006.01)

(52) **U.S. Cl.** **428/36.1**; 428/36.9

(57) **ABSTRACT**

Abrasion alert sleeves and sleeve assemblies, and methods of using them, are disclosed. The abrasion alert sleeves include protective threads and indicator or warning threads. The protective threads are placed so as to substantially shield or hide the indicator threads unless and until the protective threads become abraded, at which time, the indicator threads become more visible. The abrasion alert sleeves and sleeve assemblies thus provide protection for hydraulic or pneumatic lines, while enabling relatively easy detection of abrasion alert sleeves or sleeve assemblies that need to be replaced due to wear. Various methods for implementing inventory control procedures and replacement procedures are also disclosed.

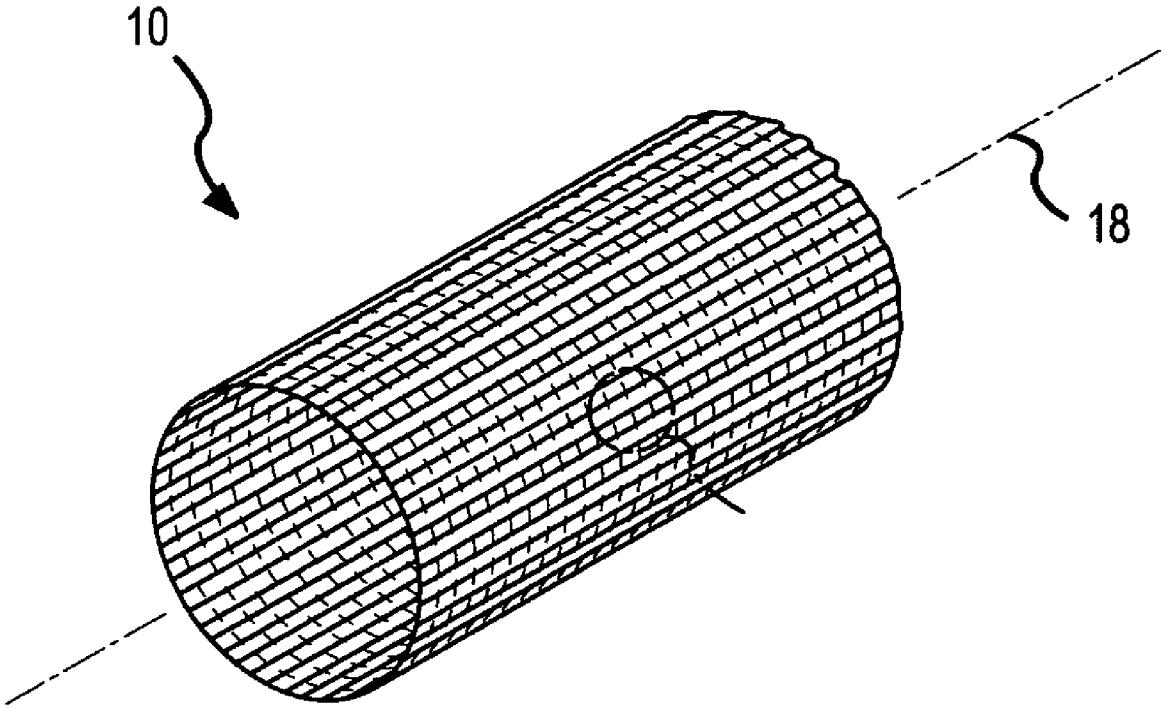

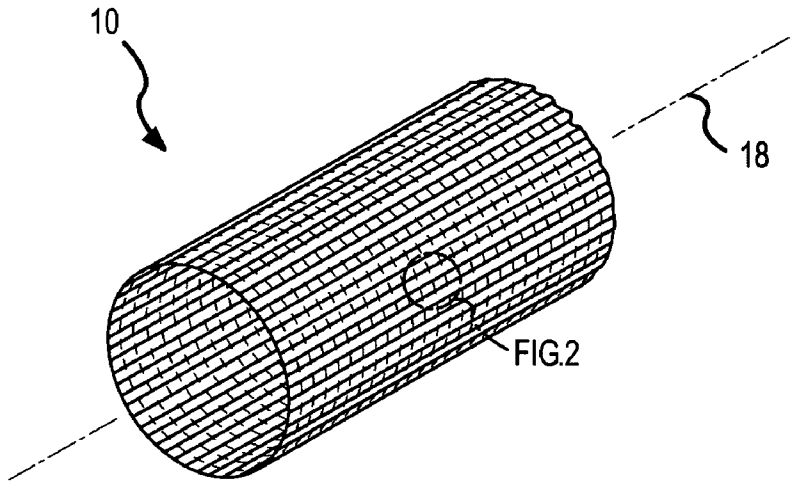

FIG.1

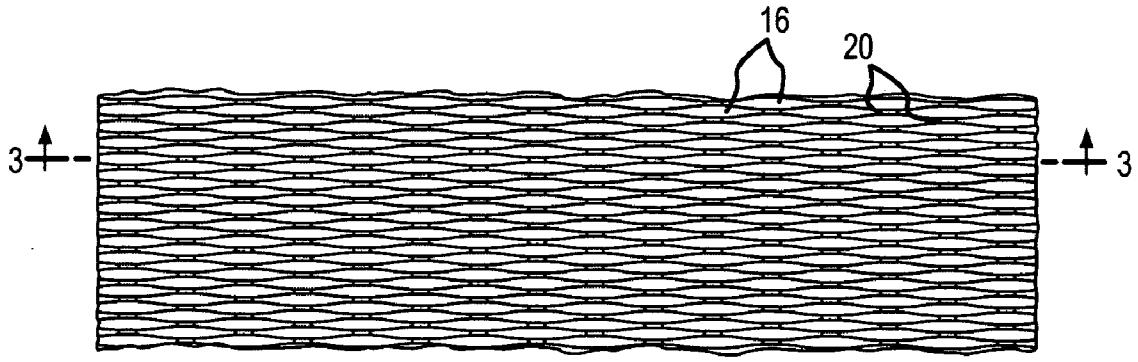

FIG.2

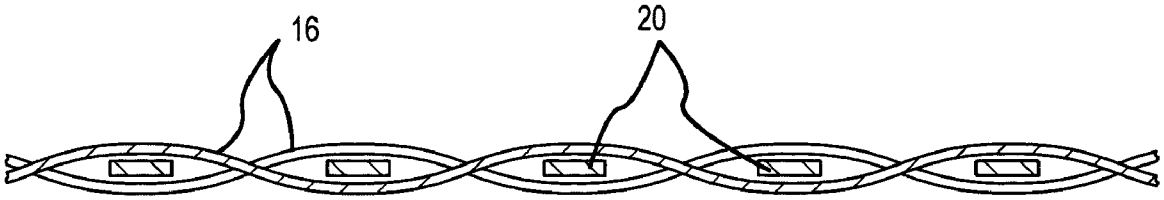

FIG.3

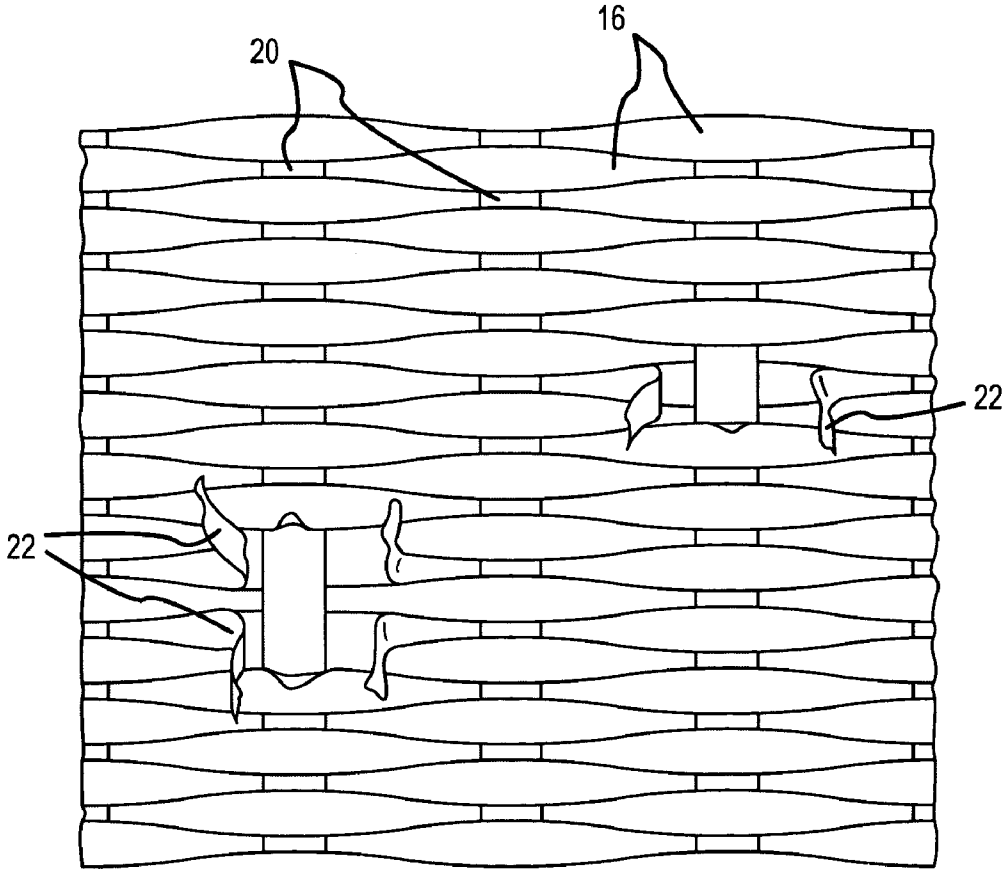

FIG.4

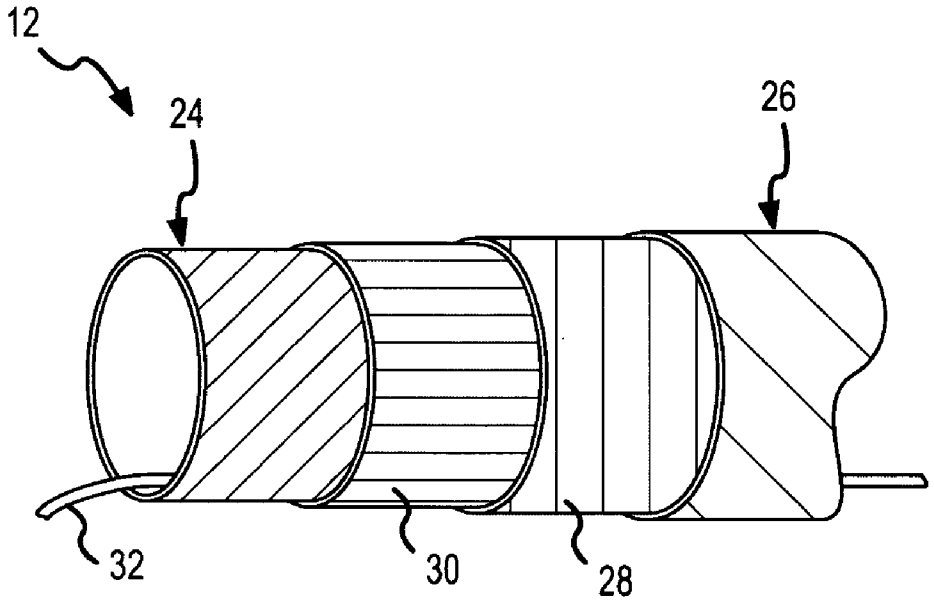

FIG.5

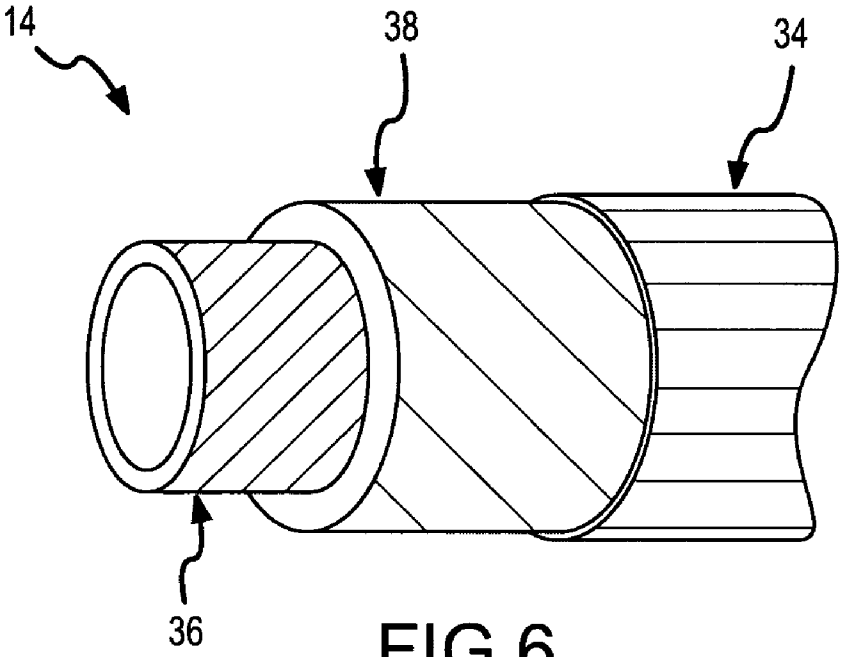

FIG.6

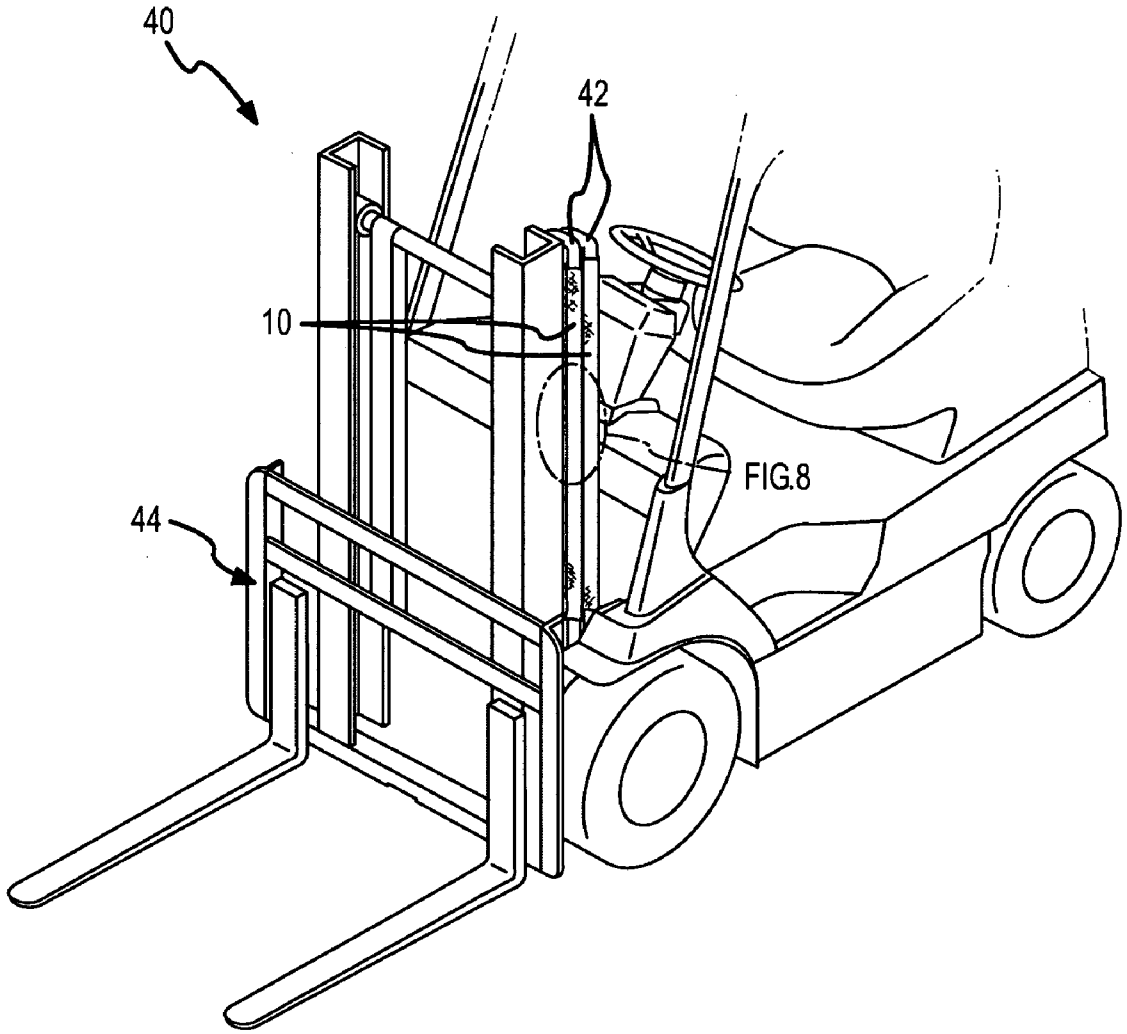

FIG.7

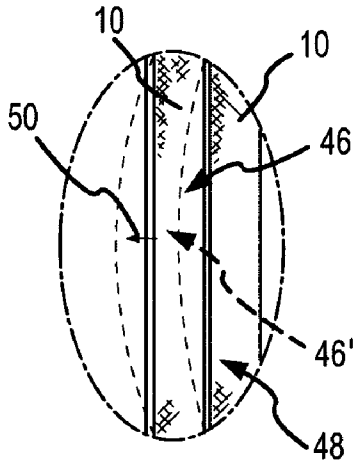

FIG.8

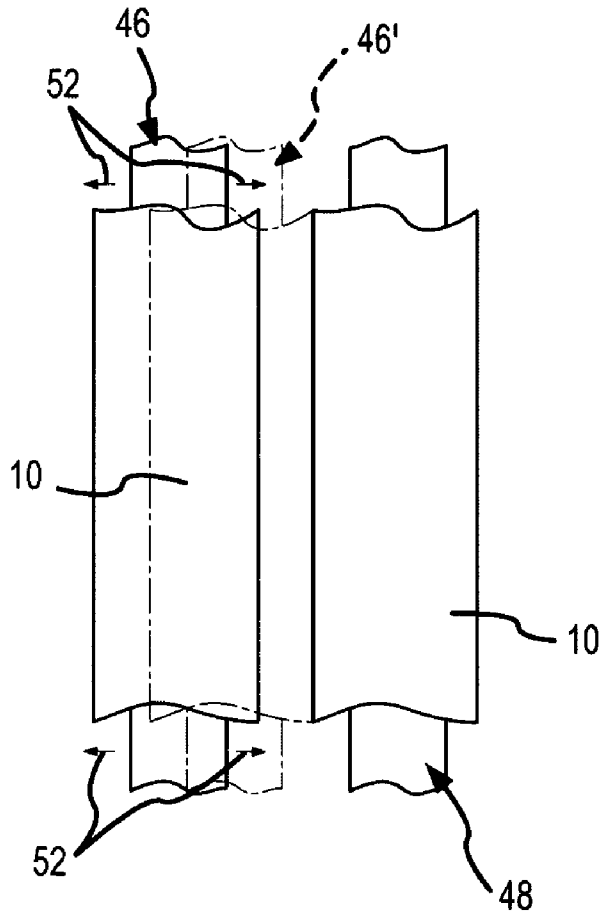

FIG.9

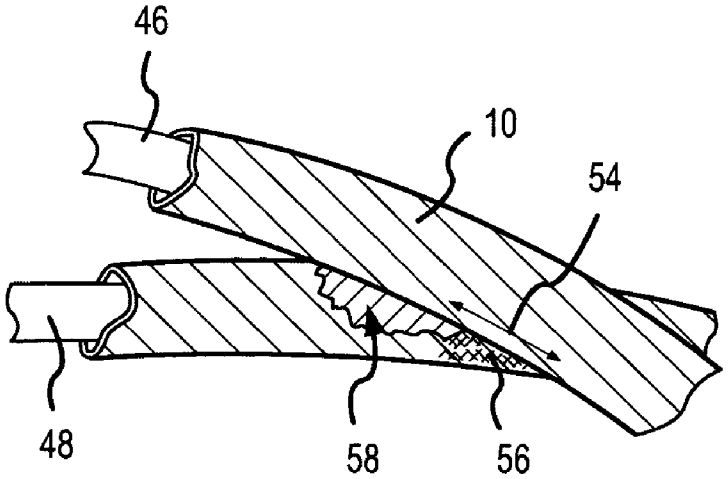

FIG.10

ABRASION ALERT SLEEVES AND SLEEVE ASSEMBLIES, AND METHODS OF USING SAME

BACKGROUND OF THE INVENTION

[0001] a. Field of the Invention

[0002] The present invention is directed toward abrasion resistant sleeves and sleeve assemblies, and toward methods of using them, for a variety of applications including the protection of hydraulic or pneumatic lines, electric wiring, or other critical components exposed to abrasion. More specifically, it relates to single-walled abrasion alert sleeves that may be used individually or embedded one inside another, wherein at least one sleeve is woven from different colored yarns or threads, including protective yarns or threads of a first, base color and indicator yarns or threads of a second, contrasting color.

[0003] b. Background Art

[0004] It is well known that hydraulic and pneumatic lines on pieces of heavy equipment and other machinery move or shift during operation. For example, as hydraulic or pneumatic lines are pressurized and depressurized, they may move laterally or longitudinally, and they may expand or swell and contract or shrink. As the lines move, they may bump against, rub against, or abrade adjacent lines or adjacent portions of the equipment or machinery. The bumping, rubbing, or abrading contact between the lines and each other, or the lines and portions of the equipment or machinery, can unduly shorten the life of the lines. Since worn-out hydraulic lines lead to equipment downtime, which itself may be costly to the equipment owner, and since the hydraulic lines themselves may be expensive to replace, people have sought ways to increase the life of hydraulic lines using various techniques, including more careful placement or routing of the hydraulic lines and various techniques for protecting or shielding the hydraulic lines themselves.

[0005] One of these existing techniques for extending the life of hydraulic lines is to place a protective sleeve around the hydraulic lines themselves for abrasion resistance. These prior art tubular webbing structures, which slide over hydraulic lines, have been constructed from industrial fabrics having threads or yarns of a single color. Although such sleeves are able to protect the hydraulic lines, additional time and effort is required to closely monitor these single-color sleeves for excessive wear so that the sleeves may be replaced before they cease to perform their protective function.

[0006] Multi-walled devices also exist that could be used to protect hydraulic lines. In these latter devices, each single-walled sleeve forming the multi-walled device is constructed from a single color of thread. A multi-walled device may be constructed from one single-walled sleeve made entirely from a first color of thread, and a second single-walled sleeve made entirely from a second color of thread that is different from the first color. Multi-walled sleeves are, however, relatively expensive to make and install. The sleeves that are used to protect the hydraulic lines should be less expensive than the hydraulic lines themselves, and they should be easy to install.

[0007] Thus, there remains a need for a protective device to safeguard hydraulic lines on heavy equipment or other machinery that is relatively inexpensive to manufacture and that facilitates easy monitoring of wear on the protective device itself.

BRIEF SUMMARY OF THE INVENTION

[0008] It is desirable to be able to protect hydraulic lines (and other components that may be subject to abrasion like pneumatic lines, and electrical leads) with a protection device that not only protects the hydraulic lines, but also readily alerts those who use or maintain the equipment or machinery when the protection device is in need of repair or replacement. Accordingly, it is an object of the disclosed invention to provide an improved abrasion protection device.

[0009] The invention comprises a single-walled abrasion alert sleeve wherein the wall is woven from threads or yarns of different colors. For example, an abrasion alert sleeve according to the instant invention may include protective threads or yarns of a base color (e.g., black) interwoven with indicator or warning threads or yarns of a contrasting color (e.g., red or yellow). The protective threads substantially shield or hide the indicator threads when the abrasion alert sleeve is new. As the abrasion alert sleeve protects the hydraulic lines, the protective threads are worn away, and more and more indicator threads become visible over time. In other words, when the protective threads become worn or abraded, the indicator threads of a contrasting color are revealed. The indicator threads thus visually indicate in a relatively easily observable way when the abrasion alert sleeve may fail to protect the hydraulic line and needs to be removed from service. In addition to standalone sleeves, the present invention also comprise abrasion alert sleeve assemblies comprising at least one of these single-walled standalone abrasion alert sleeves used in combination with one or more additional sleeves.

[0010] In one form, the present invention comprises an abrasion resistant device for the protection of a component that would otherwise be exposed to direct abrasion. In this form, the device comprises a single-walled, tubular abrasion alert sleeve woven from longitudinally-extending, protective yarns of a base color interwoven with laterally-extending, indicator yarns of a contrasting color, wherein the base color is different from the contrasting color, and wherein the protective yarns substantially conceal the indicator yarns from view.

[0011] In another form, the present invention is an abrasion alert jacket comprising a single-walled, tubular structure having a longitudinal axis and constructed from threads having at least two contrasting colors to facilitate use of the abrasion alert jacket as a wear indicator. These threads include a first plurality of longitudinally-extending protective threads, the protective threads being of a dominant color and being arranged substantially parallel to the jacket longitudinal axis. The threads also include a second plurality of indicator threads extending substantially perpendicularly to the first plurality of longitudinally-extending protective threads, the indicator threads being of an indicator color and being interwoven with the first plurality of longitudinally-extending protective threads so as to be substantially shielded by and hidden among the first plurality of longitudinally-extending protective threads when the abrasion alert jacket is unworn. The indicator threads are adapted to become visible as the protective threads become worn.

[0012] In yet another form, the present invention comprises a multi-tube, sleeve assembly of concentrically-embedded sleeves for the protection of a critical component that would otherwise be directly exposed to abrasion. In this form, the sleeve assembly comprising an outermost, single-walled sleeve circumscribing a first interior region, the outermost sleeve being constructed from protective threads of a base color and indicator threads of a first contrasting color. The sleeve assembly also comprises an innermost, single-walled sleeve circumscribing a second interior region, the innermost sleeve being located inside the first interior region, and the innermost sleeve being constructed from protective threads of the base color and indicator threads of a second contrasting color, wherein the first contrasting color is different from the second contrasting color, and wherein the critical component resides within the second interior region.

[0013] In still another form, the present invention comprises an abrasion alert sleeve assembly having a-tube-inside-a-tube construction. In this form, the sleeve assembly comprises a first, single-walled, abrasion alert sleeve having a first longitudinal axis and constructed from threads of at least two contrasting colors to facilitate use of the first abrasion alert sleeve as a first wear indicator. The threads of the first abrasion alert sleeve include a first plurality of longitudinally-extending protective threads, the first plurality of protective threads being of a first base color and being arranged substantially parallel to the first longitudinal axis; and a second plurality of indicator threads extending substantially perpendicularly to the first plurality of protective threads, the second plurality of indicator threads being of a first indicator color and being interwoven with the first plurality of protective threads so as to be substantially shielded by and hidden among the first plurality of protective threads when the first abrasion alert sleeve is unworn, and wherein the second plurality of indicator threads are adapted to become more clearly visible as the first plurality of protective threads become worn. In this form, the sleeve assembly further comprises a second, single-walled, abrasion alert sleeve having a second longitudinal axis and constructed from threads having at least two contrasting colors to facilitate use of the second abrasion alert sleeve as a second wear indicator, wherein the second abrasion alert sleeve is embedded within the first abrasion alert sleeve. The threads of the second abrasion alert sleeve include a third plurality of longitudinally-extending protective threads, the third plurality of protective threads being of a second base color and being arranged substantially parallel to the second longitudinal axis; and a fourth plurality of indicator threads extending substantially perpendicularly to the third plurality of protective threads, the fourth plurality of indicator threads being of a second indicator color and being interwoven with the third plurality of protective threads so as to be substantially shielded by and hidden among the third plurality of protective threads when the second abrasion alert sleeve is unworn, and wherein the fourth plurality of indicator threads are adapted to become more clearly visible as the third plurality of protective threads become worn. The first base color may be the same as the second base color.

[0014] In another form, the present invention comprises a multi-walled, abrasion resistant sleeve assembly constructed from a plurality of embedded, single-walled, abrasion alert sleeves including an outermost, single-walled sleeve woven from threads of at least two contrasting colors; and an innermost, single-walled sleeve woven from threads of a single color. This form of the present invention may further comprise at least one intermediate sleeve woven from threads of at least two contrasting colors and inserted between the outermost sleeve and the innermost sleeve. The thicknesses of the sleeves may vary in any desired way, or the sleeves may all have the same thickness.

[0015] The present invention also comprises a method of protecting a critical component in an abusive environment using single-walled, multi-colored, abrasion alert sleeves. In this form, the method comprises the steps of (a) installing a first abrasion alert sleeve over the critical component, the first abrasion alert sleeve comprising a first plurality of protective threads of a first base color and a first plurality of indicator threads of a first warning color, wherein the first plurality of protective threads are woven with the first plurality of indicator threads so as to substantially hide the first plurality of indicator threads; (b) monitoring the first abrasion alert sleeve for the appearance of the first warning color; and (c) removing the first abrasion alert sleeve and installing a replacement abrasion alert sleeve upon the appearance of a substantial amount of the first warning color. The first base color may be, for example, black, and the first warning color may be, for example, yellow or red.

[0016] In yet another form, the present invention comprises a method of protecting a critical component in an abusive environment using an abrasion alert sleeve assembly comprising a plurality of abrasion alert sleeves. This method comprises the steps of (a) installing a first abrasion alert sleeve assembly over the critical component, the first abrasion alert sleeve assembly comprising (1) an outermost, single-walled abrasion alert sleeve, the outermost abrasion alert sleeve comprising a first plurality of protective threads of a first base color and a second plurality of indicator threads of a warning color, wherein the first plurality of protective threads are woven with the second plurality of indicator threads so as to substantially hide the warning color; and (2) an innermost, single-walled abrasion alert sleeve, the innermost abrasion alert sleeve comprising a third plurality of threads of a second base color; (b) monitoring the first abrasion alert sleeve assembly for the appearance of the warning color; and (c) removing and replacing the outermost abrasion alert sleeve upon the appearance of a substantial amount of the warning color.

[0017] In still another form, the present invention comprises a method of protecting a critical component in an abusive environment using an abrasion alert sleeve assembly comprising a plurality of multi-colored, abrasion alert sleeves. This method comprising the steps of (a) installing a first abrasion alert sleeve assembly over the critical component, the first abrasion alert sleeve assembly comprising (1) an outermost, single-walled abrasion alert sleeve, the outermost abrasion alert sleeve comprising a first plurality of protective threads of a first base color and a first plurality of indicator threads of a first warning color, wherein the first plurality of protective threads are woven with the first plurality of indicator threads so as to substantially hide the first plurality of indicator threads; and (2) an innermost, single-walled abrasion alert sleeve, the innermost abrasion alert sleeve comprising a second plurality of protective threads of a second base color and a second plurality of indicator threads of a second warning color, wherein the second plurality of protective threads are woven with the

second plurality of indicator threads so as to substantially hide the second plurality of indicator threads; (b) monitoring the first abrasion alert sleeve assembly for the appearance of the first warning color; (c) ordering a replacement sleeve assembly upon the appearance of a substantial amount of the first warning color; (d) monitoring the first abrasion alert sleeve assembly for the appearance of the second warning color; and (e) removing the first sleeve assembly and installing the replacement sleeve assembly upon the appearance of a substantial amount of the second warning color.

[0018] In another form, the present invention comprises a method of controlling inventory of abrasion resistant sleeve assemblies and ensuring timely replacement of worn abrasion resistant sleeve assemblies. This method comprising the steps of (a) installing an abrasion resistant sleeve assembly, the abrasion resistant sleeve assembly comprising embedded abrasion alert sleeves, including (1) an outermost, order-now, abrasion alert sleeve, the outermost abrasion alert sleeve comprising a first plurality of protective threads of a first base color and a first plurality of indicator threads of a first warning color, wherein the first plurality of protective threads are woven with the first plurality of indicator threads so as to substantially hide the first plurality of indicator threads; (2) an innermost, replace-now, abrasion alert sleeve, the innermost abrasion alert sleeve comprising a second plurality of protective threads of a second base color and a second plurality of indicator threads of a second warning color, wherein the second plurality of protective threads are woven with the second plurality of indicator threads so as to substantially hide the second plurality of indicator threads; (b) monitoring the abrasion resistant sleeve assembly during use for evidence of wear manifested as abraded and broken protective threads thereby revealing the warning threads; (c) ordering a new abrasion resistant sleeve assembly upon the appearance of the first warning color; and (d) replacing the abrasion resistant sleeve assembly upon the appearance of the second warning color. The thickness of the abrasion alert sleeves comprising the abrasion resistant sleeve assembly may be adjusted to thereby adjust the protection afforded by the abrasion resistant sleeve assembly.

[0019] In yet another form, the present invention comprises a method of establishing service intervals for abrasion alert sleeve assemblies that are being used to protect a critical component. This method comprising the steps of (a) installing a first abrasion alert sleeve assembly over the critical component, the first abrasion alert sleeve assembly comprising a plurality of single-walled abrasion alert sleeves of approximately the same thickness, including (1) an outermost, single-walled abrasion alert sleeve, the outermost abrasion alert sleeve comprising a first plurality of protective threads of a first base color and a first plurality of indicator threads of a first warning color, wherein the first plurality of protective threads are woven with the first plurality of indicator threads so as to substantially hide the first plurality of indicator threads; (2) a first intermediate, single-walled abrasion alert sleeve, the first intermediate abrasion alert sleeve comprising a second plurality of protective threads of a second base color and a second plurality of indicator threads of a second warning color, wherein the second plurality of protective threads are woven with the second plurality of indicator threads so as to substantially hide the second plurality of indicator threads; (3) a second intermediate, single-walled abrasion alert sleeve, the second intermediate abrasion alert sleeve comprising a third plurality of protective threads of a third base color and a third plurality of indicator threads of a third warning color, wherein the third plurality of protective threads are woven with the third plurality of indicator threads so as to substantially hide the third plurality of indicator threads; and (4) an innermost, single-walled abrasion alert sleeve, the innermost abrasion alert sleeve comprising a fourth plurality of protective threads of a fourth base color and a fourth plurality of indicator threads of a fourth warning color, wherein the fourth plurality of protective threads are woven with the fourth plurality of indicator threads so as to substantially hide the fourth plurality of indicator threads; (b) assessing a wear state of the first abrasion alert sleeve assembly by monitoring the first abrasion alert sleeve assembly for the appearance of at least one of the first warning color, the second warning color, the third warning color, and the fourth warning color; (c) estimating a life expectancy for the first abrasion alert sleeve assembly by monitoring how long it takes for the first warning color to initially appear; (d) adjusting the estimated life expectancy based upon how long it takes for the second and third warning colors to initially appear; (e) ordering a replacement sleeve assembly based upon the estimated life expectancy; and (f) installing the replacement sleeve assembly upon the initial appearance of the fourth warning color.

[0020] The protection afforded by an abrasion alert sleeve assembly according to the present invention may be adjusted or controlled by increasing or decreasing the number of embedded sleeves comprising the abrasion alert sleeve assembly. The protection afforded by the abrasion alert sleeve assembly may also be adjusted or controlled by changing the thickness of the abrasion alert sleeves comprising the abrasion alert sleeve assembly relative to each other.

[0021] The foregoing and other aspects, features, details, utilities, and advantages of the present invention will be apparent from reading the following description and claims, and from reviewing the accompanying drawings.

BRIEF DESCRIPTION OF THE DRAWINGS

[0022] **FIG. 1** is an isometric, fragmentary view of an abrasion alert sleeve according to a first embodiment of the present invention.

[0023] **FIG. 2** is an enlarged, fragmentary view of the indicated region of **FIG. 1** depicting further details of the woven material comprising the abrasion alert sleeve according to the first embodiment.

[0024] **FIG. 3** is a further-enlarged, fragmentary, cross-sectional view of the material depicted in **FIGS. 1 and 2** taken along line **3-3** of **FIG. 2**.

[0025] **FIG. 4** is a fragmentary view of the abrasion alert sleeve material depicted in **FIGS. 1-3**, wherein some of the protective threads or yarns have been abraded or broken thereby revealing more of the indicator threads or yarns.

[0026] **FIG. 5** depicts a second embodiment of the present invention, comprising an abrasion alert sleeve assembly formed from four embedded abrasion alert sleeves of similar thickness.

[0027] **FIG. 6** depicts a third embodiment of the present invention, comprising an abrasion alert sleeve assembly

formed from three embedded abrasion alert sleeves, wherein each sleeve has a somewhat different thickness from each of the other sleeves.

[0028] **FIG. 7** is a fragmentary, isometric view of a piece of heavy equipment having hydraulic lines that are protected by abrasion alert sleeves according to the present invention.

[0029] **FIG. 8** is an enlarged, fragmentary view of the circled portion of **FIG. 7** and depicts a first hydraulic line moving or shifting under the influence of pressure fluctuations relative to a second hydraulic line.

[0030] **FIG. 9** is a fragmentary view of a first hydraulic line moving under the influence of pressure fluctuations laterally into and out of bumping contact with a second hydraulic line.

[0031] **FIG. 10** is a fragmentary, isometric view depicting abrasion resulting from rubbing contact between two adjacent hydraulic lines.

DETAILED DESCRIPTION OF THE INVENTION

[0032] A number of embodiments of single-walled, abrasion alert sleeves or jackets **10** (see, e.g., **FIGS. 1-4**) and abrasion alert assemblies **12**, **14** (see, e.g., **FIGS. 5 and 6**) comprising a plurality of single-walled abrasion alert sleeves or jackets are disclosed. An advantage of the instant invention over the prior art is that each single-walled abrasion alert sleeve **10**, whether used alone or in combination with other single-walled, abrasion alert sleeves, is constructed from threads having at least two different colors, which facilitates use of the abrasion alert sleeves as wear indicators. Thus, using the abrasion alert sleeves according to the present invention, it is possible to protect hydraulic or pneumatic lines while controlling inventory and ensuring timely replacement of worn sleeves.

[0033] Referring first to **FIGS. 1-4**, an abrasion alert sleeve **10** according to a first embodiment of the present invention is described. **FIG. 1** is a fragmentary, isometric view of a section of an abrasion alert sleeve or jacket **10**. The abrasion alert sleeve depicted in **FIG. 1** comprises longitudinally-extending protective threads **16** that are parallel to a sleeve longitudinal axis **18**. Indicator threads **20**, which are more clearly visible in **FIGS. 2-4**, are also present and extend substantially laterally of (i.e., substantially perpendicular to) the protective threads **16**. The orientation and placement of the protective threads or yarns **16** relative to the indicator threads or yarns **20** may be more easily seen in **FIGS. 2-4**. In **FIG. 2**, which is an enlarged view of the portion of the abrasion alert sleeve **10** circled in **FIG. 1**, the relative position of the protective threads **16** and the indicator threads **20** may be more clearly seen. In particular, the protective threads, which are of a "base" or "dominant" color (e.g., black), substantially shield the interwoven indicator threads, which are of an "indicating" or "warning" color (e.g., yellow or red). The base color contrasts with the indicating color. The "base" or "dominant" color is the color that is most visible of the two contrasting colors in a new abrasion alert sleeve. In particular, the abrasion alert sleeve **10**, when new, appears to be of the base color since the indicator threads **20** are not easily seen until the protective threads **16** become worn.

[0034] **FIG. 3** is a further-enlarged, fragmentary, cross-sectional view of the material depicted in **FIGS. 1 and 2** taken along line **3-3** of **FIG. 2**. **FIGS. 2 and 3** clearly show how the weave pattern is established to hide the indicator threads **20** among the protective threads **16**. Although the indicator threads are slightly visible in a new abrasion alert sleeve, their visibility is hampered by the relative position of the indicator threads **20** relative to the protective threads **16**. As shown in **FIG. 3**, the indicator threads are embedded among and shielded by the protective threads, which are woven around the indicator threads. In this configuration, the protective threads protect and substantially hide the indicator threads. Thus, when looking at a new abrasion alert sleeve **10** like the one depicted in **FIG. 1**, the observer sees predominately the protective threads **16** having the base color, and the indicator threads **20** having the contrasting color are only partially visible. Since the protective threads shield the indicator threads as the abrasion alert sleeve comes into contact with an abrasive surface, the protective threads **16** absorb the brunt of the impact and wear.

[0035] **FIG. 4** is a fragmentary view of the abrasion alert sleeve material depicted in **FIGS. 1-3**, wherein some of the protective threads **22** have been abraded or broken thereby revealing more of the indicator threads. Thus, as the hydraulic lines are used, the protective threads **16** of the abrasion alert sleeve ultimately become abraded, damaged, or broken threads **22**. As more and more of the protective threads thus fail or wear out, the previously hidden indicator threads are revealed. As depicted in **FIG. 4**, a number of protective threads have been worn through, thereby revealing relatively larger portions of the indicator threads than are visible in a new abrasion alert sleeve **10**. Since the indicator threads **20** are of a contrasting color relative to the protective threads **16**, as more and more of the indicator threads are revealed, it becomes readily apparent to an observer (e.g., someone who maintains the equipment) that the abrasion alert sleeve **10** has started to fail. As discussed further below, replacement abrasion alert sleeves may be ordered and installed based upon timing suggested by how predominant or visible indicator threads have become as the protective threads wear or abrade.

[0036] When using a single-walled abrasion alert sleeve **10** woven from different colored threads, such as the sleeves or jackets just described in connection with **FIGS. 1-4**, the sleeves may be more quickly manufactured and may be manufactured at less cost than a multi-walled sleeve. If, however, it remains desirable to have a multi-walled sleeve, such a sleeve may be constructed from a plurality of single-walled abrasion alert sleeves **10** wherein each single-walled sleeve is woven from different colored threads, and/or wherein single-walled sleeves woven from different colored threads are interspersed with single-walled sleeves woven from a single color. **FIG. 5** depicts a second embodiment of the present invention, comprising such an abrasion alert sleeve assembly **12**.

[0037] The abrasion alert sleeve assembly **12** depicted in **FIG. 5** comprises four embedded abrasion alert sleeves, including an innermost sleeve **24**, an outermost sleeve **26**, a first intermediate sleeve **28**, and a second intermediate sleeve **30**. In the embodiment of the abrasion alert sleeve assembly **12** depicted in **FIG. 5**, each of the sleeves **24**, **26**, **28**, **30** is approximately the same thickness as each of the other sleeves. A "pull thread"**32** or "leader yarn" is also visible in **FIG. 5**. Since it may be difficult to insert a hydraulic or pneumatic line through the innermost sleeve **24**

of the abrasion alert sleeve assembly **12**, the pull thread **32** may be placed in the innermost abrasion alert sleeve **24** during production of the abrasion alert sleeve assembly **12**. This pull thread **32** may be tied or otherwise affixed to the hydraulic or pneumatic hose to be protected to facilitate pulling the hose through the abrasion alert sleeve assembly **12**. Clearly, the abrasion alert sleeve assembly may comprise more or fewer abrasion alert sleeves than the four sleeves that are depicted in **FIG. 5**.

[**0038**] **FIG. 6** depicts a third embodiment of the present invention, comprising an abrasion alert sleeve assembly **14** constructed from three abrasion alert sleeves. In this embodiment, the abrasion alert sleeves comprising the abrasion alert sleeve assembly **14** each has a somewhat different thickness compared to each of the other sleeves. In **FIG. 6**, the outermost sleeve **34** is the thinnest abrasion alert sleeve, the innermost sleeve **36** is somewhat thicker than the outermost sleeve, and the single intermediate sleeve **38** is the thickest of the three abrasion alert sleeves comprising the depicted abrasion alert sleeve assembly **14**. Clearly, the abrasion alert sleeve assembly may be constructed from more or fewer abrasion alert sleeves, and the thickness of each abrasion alert sleeve may be different from what is depicted in **FIG. 6**. For example, the thickest abrasion alert sleeve of the sleeves comprising the abrasion alert sleeve assembly need not be the intermediate sleeve, and the thinnest abrasion alert sleeve need not be the outermost sleeve.

[**0039**] Through use of the abrasion alert sleeve assemblies **12**, **14** depicted in **FIGS. 5 and 6**, a variety of different advantages may be obtained. These abrasion alert sleeve assemblies comprise multi-tube assemblies or concentric-tube assemblies with at least one tube or sleeve inside of another tube or sleeve. The outermost sleeve may be constructed from, for example, protective threads of a base color and indicator threads of a first contrasting color. The intermediate sleeve may be constructed from protective threads of the base color and indicator threads of a second contrasting color. In such a sample abrasion alert sleeve assembly comprising two embedded abrasion alert sleeves, including an outermost sleeve and an innermost sleeve, the appearance of the indicator threads of the first contrasting color may serve as notice that it is time to order a replacement abrasion alert sleeve assembly, but not yet time to replace the abrasion alert sleeve assembly that has begun to wear. Appearance of indicator threads of the second contrasting color (i.e., appearance of the indicator threads comprising part of the innermost abrasion alert sleeve) may serve as an indicator that it is time to replace the now more substantially worn abrasion alert sleeve assembly.

[**0040**] With the particular tube-inside-a-tube abrasion alert sleeve assembly described in the last paragraph, the user receives multiple benefits. In particular, as the outermost sleeve begins to wear, thereby revealing the indicator threads of the first contrasting color, the user may then place an order for a replacement abrasion alert sleeve assembly. Subsequently, when the indicator threads of the second contrasting color, which comprise part of the innermost abrasion alert sleeve, begin to be revealed in substantial quantities, the user may initiate replacement of the entire abrasion alert sleeve assembly. In the alternative, when the indicator threads of the outermost sleeve begin to be revealed as the protective threads of the outermost abrasion alert sleeve wear, the user may, at that time, replace the outermost abrasion alert sleeve before the innermost abrasion alert sleeve begins to wear. In this latter scenario, the innermost sleeve provides a "backup" or "safety" abrasion alert sleeve that preferably remains unabraded since the outermost sleeve is replaced as soon as it shows significant wear and before the innermost sleeve begins to wear or abrade. In this scenario, since the outermost abrasion alert sleeve is replaced when its indicator threads are sufficiently revealed, and the innermost sleeve is merely a backup protector of the hydraulic or pneumatic lines, the innermost sleeve may even comprise a less expensive sleeve comprised of threads of a single color. Alternatively, protective sleeves constructed from threads of a single color may be interspersed among or between abrasion alert sleeves having indicator threads with contrasting colors woven among protective threads of the base color. Each sleeve of an abrasion alert sleeve assembly may be tacked to one or more adjacent sleeves or left free to move relative to any adjacent sleeve or sleeves.

[**0041**] As shown in **FIG. 6**, the ability to adjust the thickness of each sleeve **34**, **36**, **38** (e.g., by weaving more threads together or by using thicker threads), provides another option for protecting hydraulic or pneumatic lines. For example, if abrasion alert sleeve assemblies **14** take a long period of time to obtain after they are ordered, the relatively thin outermost sleeve **34** depicted in **FIG. 6** could serve as an "order now" indicator. When the contrasting indicator threads of the outermost sleeve **34** are noticeably revealed due to abrasion of the protective threads, a replacement abrasion alert sleeve assembly **14** could be ordered. Since we are assuming in this scenario that it takes a relatively long time to manufacture and/or obtain a replacement abrasion alert sleeve assembly **14**, the relatively thinner outermost sleeve **34** results in early order placement and the relatively thicker intermediate sleeve **38** provides the main protection for the hydraulic or pneumatic lines until the replacement abrasion alert sleeve assembly **14** arrives. In this scenario, the innermost sleeve **36** may provide only backup protection in case the abrasion alert sleeve assembly **14** cannot be replaced before the intermediate sleeve **38** also fails.

[**0042**] Another advantage of abrasion alert sleeve assemblies comprising multiple multi-colored sleeves is that a user can estimate the approximate life of a sleeve assembly by monitoring how long it takes to wear through the individual layers of the abrasion alert sleeve assembly (i.e., by monitoring how long it takes for the indicator threads of individual layers to appear). This "monitoring" is easily done since the indicator threads may be different colored threads from one embedded sleeve to the next. For example, a sleeve assembly could comprise four tubular sleeves placed one inside the other. **FIG. 5** depicts such a sample of an abrasion alert sleeve assembly **12**. Each of these four embedded, abrasion alert sleeves **24**, **26**, **28**, **30** could comprise indicator threads of a different color. If one were to monitor how long it takes to wear through the outermost sleeve **26**, it would then be possible to estimate that the entire sleeve assembly **12** would need to be replaced in approximately three times the number of days it took to wear through the first of the four embedded sleeves, assuming the sleeves are of the same thickness. Using that information, a purchaser of replacement sleeve assemblies **12** could better predict when it would be necessary to have a replacement sleeve assembly

on hand since one could rapidly assess the "wear state" of the entire sleeve assembly by checking for how many colors and what colors are visible on an installed sleeve assembly.

[0043] **FIG. 7** is a fragmentary, isometric view of a piece of equipment **40** (i.e., a forklift) having a plurality of hydraulic lines **42** operatively connected to a lifting mechanism **44** of the equipment. As depicted in **FIG. 8**, which is an enlarged, fragmentary view of the circled region of **FIG. 7**, each hydraulic line **42** is protected by an abrasion alert sleeve **10** or an abrasion alert sleeve assembly **12**, **14** according to the present invention. As also shown in **FIG. 8**, the hydraulic lines move or shift relative to each other and to the equipment to which they are attached as the pressure in the hydraulic lines fluctuates. In particular, **FIG. 8** depicts an active hydraulic line **46** next to an inactive hydraulic line **48**, and an arrow **50** represents movement of the active hydraulic line **46**, **46'** relative to the inactive hydraulic line **48**. The active hydraulic line is shown in solid lines in a first position **46** relative to the inactive hydraulic line **48**, and the active hydraulic line is shown in phantom in a second position **46'** relative to the inactive hydraulic line **48**.

[0044] **FIG. 9** is similar to **FIG. 8** and again depicts an active hydraulic line **46**, **46'** adjacent to an inactive hydraulic line **48**. The active hydraulic line is moving laterally (i.e., side-to-side) under the influence of pressure fluctuations. In particular, the active hydraulic line is depicted in solid lines in a first position **46** relative to the inactive hydraulic line **48**, and the active hydraulic line is depicted in phantom in a second position **46'** relative to the inactive hydraulic line **48**. In this figure, movement of the active hydraulic line relative to the inactive hydraulic line is represented by the arrows **52**. As the active hydraulic line moves back and forth in the direction of the arrows between the first position **46** (solid lines) and the second position **46'** (phantom lines), the active hydraulic line comes into and out of "bumping" contact with the inactive hydraulic line **48**. During this bumping contact, the abrasion alert sleeves **10** surrounding the hydraulic lines provide protection for the hydraulic lines.

[0045] **FIG. 10** is similar to **FIGS. 8 and 9**, but is a fragmentary, isometric view of two hydraulic lines **46**, **48**, each protected by an abrasion alert sleeve **10**, in "rubbing" contact with each other. As depicted in **FIG. 10**, movement of the active hydraulic line **46** is represented by a two-headed arrow **54**. **FIG. 10** shows a mildly-abraded area **56** wherein the protective threads **16** (e.g., **FIG. 4**) have begun to wear. **FIG. 10** also shows a heavily-abraded area **58**, wherein more of the protective threads have failed, thereby revealing even more of the contrasting indicator threads **20** (e.g., **FIG. 4**) (represented schematically by the different cross-hatching in this figure). Clearly, the abrasion alert sleeves and sleeve assemblies according to the present invention not only protect the hydraulic lines from each other (as shown in **FIG. 10**), but also protect the hydraulic lines from wear caused by rubbing against adjacent parts of the equipment or machinery with which the hydraulic lines **42** are associated.

[0046] As alluded to above in the discussion of **FIGS. 5 and 6**, the present invention also comprises a method of controlling inventory using the contrasting colors of an abrasion alert sleeve **10** and/or the embedded sleeves of an abrasion alert sleeve assembly **12**, **14**, wherein each sleeve of the sleeve assembly has indicator threads of a color that is different from the indicator threads in the other embedded sleeves of the sleeve assembly. For example, an abrasion alert sleeve assembly may comprise an outermost sleeve having blue indicator threads. When the blue indicator threads begin to appear, the person in charge of supplies could order a new abrasion alert sleeve assembly and time the arrival of that new abrasion alert sleeve assembly to be close to the time when an abrasion alert sleeve assembly needs to be replaced. This outermost sleeve of the abrasion alert sleeve assembly thus serves as an "order now" indicator. The innermost abrasion alert sleeve of the abrasion alert sleeve assembly may include indicator threads that are, for example, red. When the red indicator threads begin to be revealed, this could indicate that it is time to replace the abrasion alert sleeve assembly. The innermost abrasion alert sleeve would thus serve as a "replace now" indicator. This technique helps reduce excess inventory since replacement abrasion alert sleeve assemblies are not ordered until their need is imminent (i.e., when the blue threads begin to appear in the above example).

[0047] Although a number of embodiments of this invention have been described with a certain degree of particularity, those skilled in this art could make numerous alterations to the disclosed embodiments without departing from the spirit or scope of this invention. For example, although two abrasion alert sleeve assemblies are depicted in **FIGS. 5 and 6**, abrasion alert sleeve assemblies comprising more or fewer sleeves, or sleeves having different thicknesses or configurations from those depicted, could be made. An important aspect of the abrasion alert sleeve assemblies according to the present invention is that they comprise at least one abrasion alert sleeve constructed from protective threads of a base color and indicator threads of a contrasting color. The above description refers primarily to hydraulic lines, but the devices described herein are equally applicable to pneumatic or other hose assemblies that experience potential abrasion during use. It should be noted that the abrasion alert sleeves and the abrasion alert sleeve assemblies described above are not designed to prevent rupture of hydraulic or pneumatic lines. All dimensional references are only used for identification purposes to aide the reader's understanding of the present invention, and do not create limitations, particularly as to the position, orientation, or use of the invention. It is intended that all matter contained in the above description or shown in the accompanying drawings shall be interpreted as illustrative only and not limiting. Changes in detail or structure may be made without departing from the spirit of the invention as defined in the appended claims.

1. An abrasion resistant device for the protection of a component that would otherwise be exposed to direct abrasion, the device comprising a single-walled, tubular abrasion alert sleeve woven from longitudinally-extending, protective yarns of a base color interwoven with laterally-extending, indicator yarns of a contrasting color, wherein said base color is different from said contrasting color, and wherein said protective yarns substantially conceal said indicator yarns from view.

2. An abrasion alert jacket comprising

a single-walled, tubular structure having a longitudinal axis and constructed from threads having at least two contrasting colors to facilitate use of the abrasion alert jacket as a wear indicator, including

a first plurality of longitudinally-extending protective threads, said protective threads being of a dominant color and being arranged substantially parallel to said longitudinal axis; and

a second plurality of indicator threads extending substantially perpendicularly to said first plurality of longitudinally-extending protective threads, said indicator threads being of an indicator color and being interwoven with said first plurality of longitudinally-extending protective threads so as to be substantially shielded by and hidden among said first plurality of longitudinally-extending protective threads when said abrasion alert jacket is unworn, and wherein said indicator threads are adapted to become visible as said protective threads become worn.

3. The abrasion alert jacket of claim 2, wherein said base color is black, and wherein said indicating color is selected from the group consisting of red, yellow, and orange.

4. A multi-tube, sleeve assembly of concentrically-embedded sleeves for the protection of a critical component that would otherwise be directly exposed to abrasion, the sleeve assembly comprising

an outermost, single-walled sleeve circumscribing a first interior region, said outermost sleeve being constructed from protective threads of a base color and indicator threads of a first contrasting color; and

an innermost, single-walled sleeve circumscribing a second interior region, said innermost sleeve being located inside said first interior region, said innermost sleeve being constructed from protective threads of said base color and indicator threads of a second contrasting color, wherein said first contrasting color is different from said second contrasting color, and wherein the critical component resides within said second interior region.

5. An abrasion alert sleeve assembly having a-tube-inside-a-tube construction, the sleeve assembly comprising

a first, single-walled, abrasion alert sleeve having a first longitudinal axis and constructed from threads of at least two contrasting colors to facilitate use of said first abrasion alert sleeve as a first wear indicator, wherein said threads of said first abrasion alert sleeve include

a first plurality of longitudinally-extending protective threads, said first plurality of protective threads being of a first base color and being arranged substantially parallel to said first longitudinal axis; and

a second plurality of indicator threads extending substantially perpendicularly to said first plurality of protective threads, said second plurality of indicator threads being of a first indicator color and being interwoven with said first plurality of protective threads so as to be substantially shielded by and hidden among said first plurality of protective threads when said first abrasion alert sleeve is unworn, and wherein said second plurality of indicator threads are adapted to become more clearly visible as said first plurality of protective threads become worn; and

a second, single-walled, abrasion alert sleeve having a second longitudinal axis and constructed from threads having at least two contrasting colors to facilitate use of said second abrasion alert sleeve as a second wear indicator, wherein said second abrasion alert sleeve is embedded within said first abrasion alert sleeve, and wherein said threads of said second abrasion alert sleeve include

a third plurality of longitudinally-extending protective threads, said third plurality of protective threads being of a second base color and being arranged substantially parallel to said second longitudinal axis; and

a fourth plurality of indicator threads extending substantially perpendicularly to said third plurality of protective threads, said fourth plurality of indicator threads being of a second indicator color and being interwoven with said third plurality of protective threads so as to be substantially shielded by and hidden among said third plurality of protective threads when said second abrasion alert sleeve is unworn, and wherein said fourth plurality of indicator threads are adapted to become more clearly visible as said third plurality of protective threads become worn.

6. The multi-walled, abrasion resistant sleeve assembly of claim 5, wherein said first base color is the same as said second base color.

7. A multi-walled, abrasion resistant sleeve assembly constructed from a plurality of embedded, single-walled, abrasion alert sleeves including

an outermost, single-walled sleeve woven from threads of at least two contrasting colors; and

an innermost, single-walled sleeve woven from threads of a single color.

8. The multi-walled, abrasion resistant sleeve assembly of claim 7 further comprising at least one intermediate sleeve woven from threads of at least two contrasting colors.

9. The multi-walled, abrasion resistant sleeve assembly of claim 8, wherein said outermost sleeve is thinner than both said innermost sleeve and said at least one intermediate sleeve, wherein said innermost sleeve is thicker than said outermost sleeve, and wherein said at least one intermediate sleeve is thicker than both said outermost sleeve and said at least one intermediate sleeve.

10. The multi-walled, abrasion resistant sleeve assembly of claim 8, wherein said outermost, single-walled sleeve; said innermost, single-walled sleeve; and said at least one intermediate sleeve are each of substantially the same thickness.

11. The multi-walled, abrasion resistant sleeve assembly of claim 8, wherein each of said outermost, single-walled sleeve; said innermost, single-walled sleeve; and said at least one intermediate sleeve has a thickness that is different from the thickness of each of the other sleeves.

12. The multi-walled, abrasion resistant sleeve assembly of claim 7 further comprising

a first intermediate sleeve woven from threads of at least two contrasting colors and embedded between said outermost sleeve and said innermost sleeve; and

a second intermediate sleeve woven from threads of at least two contrasting colors and embedded between said first intermediate sleeve and said innermost sleeve.

13. The multi-walled, abrasion resistant sleeve assembly of claim 7 further comprising a pull thread within said innermost abrasion alert sleeve.

14. A method of protecting a critical component in an abusive environment using single-walled, multi-colored, abrasion alert sleeves, the method comprising the steps of

(a) installing a first abrasion alert sleeve over the critical component, said first abrasion alert sleeve comprising a first plurality of protective threads of a first base color and a first plurality of indicator threads of a first warning color, wherein said first plurality of protective threads are woven with said first plurality of indicator threads so as to substantially hide said first plurality of indicator threads;

(b) monitoring said first abrasion alert sleeve for the appearance of said first warning color; and

(c) removing said first abrasion alert sleeve and installing a replacement abrasion alert sleeve upon the appearance of a substantial amount of said first warning color.

15. The method of claim 14, wherein said first base color is black and said first warning color is yellow, and wherein said critical component in selected from the group consisting of hydraulic lines, pneumatic lines, and electrical leads.

16. A method of protecting a critical component in an abusive environment using an abrasion alert sleeve assembly comprising a plurality of abrasion alert sleeves, the method comprising the steps of

(a) installing a first abrasion alert sleeve assembly over the critical component, the first abrasion alert sleeve assembly comprising

(1) an outermost, single-walled abrasion alert sleeve, said outermost abrasion alert sleeve comprising a first plurality of protective threads of a first base color and a second plurality of indicator threads of a warning color, wherein said first plurality of protective threads are woven with said second plurality of indicator threads so as to substantially hide said warning color; and

(2) an innermost, single-walled abrasion alert sleeve, said innermost abrasion alert sleeve comprising a third plurality of threads of a second base color;

(b) monitoring said first abrasion alert sleeve assembly for the appearance of said warning color; and

(c) removing and replacing said outermost abrasion alert sleeve upon the appearance of a substantial amount of said warning color.

17. A method of protecting a critical component in an abusive environment using an abrasion alert sleeve assembly comprising a plurality of multi-colored, abrasion alert sleeves, the method comprising the steps of

(a) installing a first abrasion alert sleeve assembly over the critical component, the first abrasion alert sleeve assembly comprising

(1) an outermost, single-walled abrasion alert sleeve, said outermost abrasion alert sleeve comprising a first plurality of protective threads of a first base color and a first plurality of indicator threads of a first warning color, wherein said first plurality of protective threads are woven with said first plurality of indicator threads so as to substantially hide said first plurality of indicator threads; and

(2) an innermost, single-walled abrasion alert sleeve, said innermost abrasion alert sleeve comprising a second plurality of protective threads of a second base color and a second plurality of indicator threads of a second warning color, wherein said second plurality of protective threads are woven with said second plurality of indicator threads so as to substantially hide said second plurality of indicator threads;

(b) monitoring said first abrasion alert sleeve assembly for the appearance of said first warning color;

(c) ordering a replacement sleeve assembly upon the appearance of a substantial amount of said first warning color;

(d) monitoring said first abrasion alert sleeve assembly for the appearance of said second warning color; and

(e) removing said first sleeve assembly and installing said replacement sleeve assembly upon the appearance of a substantial amount of said second warning color.

18. A method of controlling inventory of abrasion resistant sleeve assemblies and ensuring timely replacement of worn abrasion resistant sleeve assemblies, the method comprising the steps of

(a) installing an abrasion resistant sleeve assembly, said abrasion resistant sleeve assembly comprising embedded abrasion alert sleeves, including

(1) an outermost, order-now, abrasion alert sleeve, said outermost abrasion alert sleeve comprising a first plurality of protective threads of a first base color and a first plurality of indicator threads of a first warning color, wherein said first plurality of protective threads are woven with said first plurality of indicator threads so as to substantially hide said first plurality of indicator threads;

(2) an innermost, replace-now, abrasion alert sleeve, said innermost abrasion alert sleeve comprising a second plurality of protective threads of a second base color and a second plurality of indicator threads of a second warning color, wherein said second plurality of protective threads are woven with said second plurality of indicator threads so as to substantially hide said second plurality of indicator threads;

(b) monitoring said abrasion resistant sleeve assembly during use for evidence of wear manifested as abraded and broken protective threads thereby revealing said warning threads;

(c) ordering a new abrasion resistant sleeve assembly upon the appearance of said first warning color; and

(d) replacing said abrasion resistant sleeve assembly upon the appearance of said second warning color.

19. The method of claim 18, where step (a) further comprises adjusting the thickness of the abrasion alert sleeves comprising the abrasion resistant sleeve assembly to adjust the protection afforded by the abrasion resistant sleeve assembly.

20. A method of establishing service intervals for abrasion alert sleeve assemblies being used to protect a critical component, the method comprising the steps of

(a) installing a first abrasion alert sleeve assembly over the critical component, the first abrasion alert sleeve assembly comprising a plurality of single-walled abrasion alert sleeves of approximately the same thickness, including

(1) an outermost, single-walled abrasion alert sleeve, said outermost abrasion alert sleeve comprising a first plurality of protective threads of a first base color and a first plurality of indicator threads of a first warning color, wherein said first plurality of protective threads are woven with said first plurality of indicator threads so as to substantially hide said first plurality of indicator threads;

(2) a first intermediate, single-walled abrasion alert sleeve, said first intermediate abrasion alert sleeve comprising a second plurality of protective threads of a second base color and a second plurality of indicator threads of a second warning color, wherein said second plurality of protective threads are woven with said second plurality of indicator threads so as to substantially hide said second plurality of indicator threads;

(3) a second intermediate, single-walled abrasion alert sleeve, said second intermediate abrasion alert sleeve comprising a third plurality of protective threads of a third base color and a third plurality of indicator threads of a third warning color, wherein said third plurality of protective threads are woven with said third plurality of indicator threads so as to substantially hide said third plurality of indicator threads; and

(4) an innermost, single-walled abrasion alert sleeve, said innermost abrasion alert sleeve comprising a fourth plurality of protective threads of a fourth base color and a fourth plurality of indicator threads of a fourth warning color, wherein said fourth plurality of protective threads are woven with said fourth plurality of indicator threads so as to substantially hide said fourth plurality of indicator threads;

(b) assessing a wear state of said first abrasion alert sleeve assembly by monitoring said first abrasion alert sleeve assembly for the appearance of at least one of said first warning color, said second warning color, said third warning color, and said fourth warning color;

(c) estimating a life expectancy for said first abrasion alert sleeve assembly by monitoring how long it takes for said first warning color to initially appear;

(d) adjusting said estimated life expectancy based upon how long it takes for said second and third warning colors to initially appear;

(e) ordering a replacement sleeve assembly based upon said estimated life expectancy; and

(f) installing said replacement sleeve assembly upon the initial appearance of said fourth warning color.

* * * * *