(12) PATENT
(19) AUSTRALIAN PATENT OFFICE

(11) Application No. **AU 199640892 B2**
(10) Patent No. **699990**

(54) Title

A method and an apparatus for the parallel displacement of a material web

(51)[6] International Patent Classification(s)

B65H 016/08

(21) Application No: 199640892

(22) Application Date: 1996.01.09

(30) Priority Data

(31) Number	(32) Date	(33) Country
9500077	1995.01.11	SE

(43) Publication Date : 1996.07.18

(43) Publication Journal Date : 1996.07.18

(44) Accepted Journal Date : 1998.12.17

(71) Applicant(s)

Tetra Laval Holdings Finance SA

(72) Inventor(s)

Mellquist Henrik; Thulin Rolf; Nantin Hans

(74) Agent/Attorney

WATERMARK PATENT TRADEMARK ATTORNEYS

(56) Related Art

US 4611799

US 3721376

US 4386988

AU9640892

(12) PATENT ABSTRACT (11) Document No. AU-A-40892/96
(19) AUSTRALIAN PATENT OFFICE

(54) Title
A METHOD AND AN APPARATUS FOR THE PARALLEL DISPLACEMENT OF A MATERIAL WEB

International Patent Classification(s)
(51)[6] **B65H 016/08**

(21) Application No. : **40892/96** (22) Application Date : **09.01.96**

(30) Priority Data

(31) Number	(32) Date	(33) Country
9500077	**11.01.95**	**SE SWEDEN**

(43) Publication Date : **18.07.96**

(71) Applicant(s)
TETRA LAVAL HOLDINGS & FINANCE SA

(72) Inventor(s)
HENRIK MELLQUIST; ROLF THULIN; HANS NANTIN

(74) Attorney or Agent
WATERMARK PATENT & TRADEMARK ATTORNEYS , Locked Bag 5, HAWTHORN VIC 3122

(57) Claim

1. A method of parallel displacement of a material web (1), by advancing the material web (1) over a first, driven bending roller (6), and a second, driven bending roller (8), which is offset in parallel in relation to the first bending roller (6), characterized in that the material web (1) is caused, between the two bending rollers (6, 8), to form a freely depending bight or loop (11) whose lower position is read-off by a sensing device (12) which controls the driving of the one bending roller (6, 8).

6. An apparatus for parallel displacement of a material web (1), comprising a storage reel (2) and a first driven bending roller (6), a second driven bending roller (8) offset in parallel in relation to the first bending roller (6) and to the storage reel (2), characterized in that the material web (1) is disposed, between the drive rollers, to create a freely depending bight or loop (11), the apparatus further including a sensing device (12) which is disposed to control the speed of one of the bending rollers (6, 8).

ABSTRACT OF THE DISCLOSURE

The invention relates to a method and an apparatus for the parallel displacement of a material web (1) in that the material web (1) is, between two driven bending rollers (6, 8), caused to form a freely depending bight or loop (11) whose lower end is read-off by a sensing device (12). The sensing device (12) controls the speed of the first bending roller (6), while the second bending roller (8) is driven at constant speed.

Publication figure:

P/00/011 28/5/91
Regulation 3.2(2)

AUSTRALIA

Patents Act 1990

ORIGINAL
COMPLETE SPECIFICATION
STANDARD PATENT

Application Number:
Lodged:

Invention Title: A METHOD AND AN APPARATUS FOR THE PARALLEL DISPLACEMENT OF A MATERIAL WEB

The following statement is a full description of this invention, including the best method of performing it known to us :-

A METHOD AND AN APPARATUS FOR THE PARALLEL DISPLACEMENT OF A MATERIAL WEB

TECHNICAL FIELD

The present invention relates to a method and an apparatus for the parallel displacement of a material web by advancing the material web over a first, driven bending roller and a second, driven bending roller which is offset in parallel in relation to the first bending roller.

BACKGROUND ART

When a material web, for example in a filling machine for the filling and production of packages of the single use disposable type, is to be spliced or joined to another web, the intention is to be able to carry out the splicing operation as rapidly as possible without stopping production and without the material storage reels taking up excessive space.

The material web which is employed for the filling machines intended for the packing of liquid foods into, for example, parallelepipedic packages, in which the material web is formed, filled and severed to form individual packages consists of paper board or paper to which different plastic layers are laminated, and, on occasions, also aluminium foil. This packaging material web is relatively rigid and unwieldy in handling.

In the splicing operation in machines in operation today, use is made of so-called storage reels placed after one another, in which operation the splicing is carried out from the one reel to the other and the incoming spliced reel is thereafter moved to an inner production output position. As an alternative, the reels are placed beside one another, in which event that reel which is currently being used is placed centrally, so that the material web runs directly and exactly into the filling machine. Also in this case, the incoming spliced storage, or jumbo, reel must be moved into this central position after the splicing operation.

OBJECT OF THE INVENTION

One object of the present invention is to realise a method for the parallel displacement of the material web so that the storage reels need not be moved to a central position after the splicing operation, but instead that the splicing operation may be carried out rapidly and easily during

production, and the space required for storage reels may be rendered as compact and slight as possible.

SOLUTION

This and other objects have been attained according to the present invention by providing a method of parallel displacement of a material web including the steps of advancing the material web past a splicing apparatus and over a first, driven bending roller, and a second, driven bending roller, which is offset in parallel in relation to the first bending roller, characterized in that the material web (1) is caused, between the two bending rollers, to form a freely depending bight or loop whose lower position is read-off by a sensing device which controls the driving of one of the first and second bending rollers.

In another aspect of the invention, there is provided an apparatus for parallel displacement of a material web including a storage reel, a splicing apparatus, a first driven bending roller, and a second driven bending roller offset in parallel in relation to the first bending roller and to the storage reel, said apparatus characterized in that the material web is advanced past a splicing apparatus and is disposed, between the drive rollers, to create a freely depending bight or loop, the apparatus further including a sensing device which is disposed to control the speed of one of the bending rollers.

Preferred embodiments of the present invention have further been given the characterizing features as set forth in the appended subclaims.

BRIEF DESCRIPTION OF THE ACCOMPANYING DRAWINGS

One preferred embodiment of the present invention will now be described in greater detail hereinbelow, with particular reference to the accompanying Drawings, in which:

Fig. 1 shows the parallel displacement of the material web from the one lateral position;

Fig. 2 shows the parallel displacement of the material web from the other lateral position;

Fig. 3 is a side elevation with a virgin storage reel; and

Fig. 4 is a side elevation showing a used storage reel.

The accompanying Drawings show only those details essential to an

AUSTRALIAN PATENT OFFICE

understanding of the present invention, and consequently the location of the storage reels in the filling machine and the drawing of the material web have been omitted from this presentation as being well-known to a person skilled in the art.

DESCRIPTION OF PREFERRED EMBODIMENT

The method according to the invention for the parallel displacement of a material web 1 is intended to be employed in the splicing of a material web 1 from one storage reel 2 A to a new storage reel 2 B. In the types of filling machines in which the method according to the invention is intended to be used, the machine is provided with a large storage reel 2 in a space intended therefore, from whence the material web 1 runs through the

AUSTRALIAN PATENT OFFICE

machine and is processed, sealed, filled and severed to form individual packages.

As shown in Figs. 1 and 2, two storage reels 2 are placed side-by-side in a reel magazine intended therefore, which may be made relatively narrow and compact since the reels 2 are not intended to be moved laterally or moved in any other way, after being housed in the magazine.

The material web 1 preferably consists of paper or paper board to which different thermoplastic layers, and possibly also aluminium, have been laminated.

In the preferred embodiment, both of the storage reels 2 are placed symmetrically on either side of the centre line of the filling machine. Fig. 1 shows the case in which the one storage reel 2 A is employed, and Fig. 2 shows the case in which the second storage reel 2 B is in use. In continuous production, use is made of one or the other position alternatingly, according as splicing is necessary, so as to maintain the continuous production output of packages. The storage reels 2 need not be symmetrically placed, but may be at different distances from the centre line of the machine, or alternatively the first reel 2 may be placed in the centre line and the second reel 2 is laterally offset in relation to the first reel.

The splicing equipment which should be available for machine staff is suitably placed between one roller 3 and a second roller 4 (the splicing equipment is not shown on the Drawings). After the splicing equipment, some form of edge guide 5 may be placed in the path of advancement of the material web 1, as shown in Figs. 3 and 4.

After the two rollers 3 and 4, there is disposed a first bending roller 6 which is driven and has an idling roller 7 resting against it. Alternatively, the idling roller 7 may be driven and the bending roller 6 may run freely against the roller 7. For reducing the method according to the present invention into practice, there is also required a second bending roller 8 (which is also driven), with a corresponding idling roller 9. This second bending roller 8 is offset in parallel in relation to the first bending roller 6, and the second bending roller 8 is located in the centre line of the filling machine. After the parallel displacement, i. e. at the second bending roller 8, some form of edge guide 10 is suitably once again placed in position.

In the path of the material web 1, there is also suitably disposed some form of magazine for creating the requisite time for the splicing operation, without the need for stopping the machine.

As shown in Fig. 2, the use of the second storage reel 2 B corresponds to the above-described equipment. Between the first two rollers 3 B, 4", there is a splicing apparatus (not shown on the Drawings), and thereafter a first bending roller 6". The centrally placed second bending roller 8 consists of the same bending roller 8 as in the case illustrated in Fig. 1.

As an alternative to the case where both of the rollers 3 and 4, the splicing apparatus and the first bending roller 6 are wholly or partly separate, on either side of the web 1, these parts 1 may be common and laterally movable to one or the other side as required.

Thus, the material web 1 arrives from one or the other side of the centre line and is spliced into a central material drawing situation.

The material web 1 is passed from one of the storage reels 2 over a roller 3 past the splicing apparatus over a further roller 4 and reaches the first bending roller 6. Thereafter, the material web 1 is caused to form a freely depending loop or bight 11 between the two bending rollers 6 and 8. The material loop 11 thus constitutes the vertical parallel displacement of the material web 1 when the first bending roller 6 is placed on one side of the centre line of the filling machine and the second bending roller 8 is placed in the centre line. The length of the material loop or bight 11 is selected to be as short as possible without the material web 1 being damaged or twisted in a manner that might impair further handling of the web. It generally applies according to the invention that the further the distance from a storage reel 2 to the centre line of the filling machine, the longer the loop 11 must be.

The first bending roller 6 is driven at varying speed, this being governed by means of a sensing device 12 placed at and disposed to read-off the lower position of the material loop. The sensing device 12 suitably consists of a photocell or the like. When the photocell 12 is covered, i.e. it "sees" the material loop 11, the speed of the first bending roller 6 is reduced and, when the photocell 12 is free, i.e. it "does not see" the material loop 11, the speed of the first bending roller 6 is increased. The second bending roller 8 is driven at a constant speed which is slower than the higher speed of the first bending roller 6. Alternatively, the first bending roller 6 is driven at constant speed while the second bending roller 8 operates at varying speed.

It is also possible to employ two photocells 12 which, in the two positions, either stop or start operation, alternatively, of one of the two bending rollers 6, 8; while the second bending roller 6, 8 is driven at constant speed.

The material web 1 is thereafter led in its new central position through the filling machine across a new roller 13. Other work stations may be provided between the two latter rollers 8 and 13, such as strip applicators, pull-tab applicators, etc. Alternatively, this latter roller 13 may be driven instead of the second bending roller 8.

When the method according to the present invention is employed for splicing to a filling machine, use is suitably also made of some form of magazine in which a magazine reel 14 may pivot vertically between two rollers 13 and 15. Figs. 3 and 4 show these two positions, in which Fig. 3 shows a full but unused magazine, with the magazine reel 14 in its lower extreme position. Fig. 4 shows an empty and completely used magazine, with the magazine reel 14 in its upper extreme position. The time that elapses for the magazine reel 14 to move from the one extreme position to the other, i.e. from completely full to completely empty magazine allows the requisite time for splicing so that the filling machine can be driven continuously without needing to be stopped for the splicing operation.

As will have been apparent from the foregoing description, the present invention realises the possibility of parallel displacement of the material web so that the storage reels may be retained in their initial positions and a space will be created for storage reels which takes up the smallest possible space.

The present invention should not be considered as restricted to that described above and shown on the Drawings, many modifications being conceivable without departing from the and scope of the appended Claims.

THE CLAIMS DEFINING THE INVENTION ARE AS FOLLOWS:

1. A method of parallel displacement of a material web (1), including the steps of advancing the material web (1) past a splicing apparatus and over a first, driven bending roller (6), and a second, driven bending roller (8), which is offset in parallel in relation to the first bending roller (6), said method characterized in that the material web (1) is caused, between the two bending rollers (6,8), to form a freely depending bight or loop (11) whose lower position is read-off by a sensing device (12) which controls the driving one of the first and second bending rollers.

2. The method of parallel displacement of a material web (1) as claimed in Claim 1, characterized in that the sensing device (12) consists of a photocell.

3. The method as claimed in Claim 1 or 2, characterized in that the sensing device (12) controls the driving of the first bending roller (6) so that the bending roller (6) is driven at a lower speed when the material loop (11) covers the sensing device (12).

4. The method as claimed in Claim 3, characterized in that the first bending roller (6) is driven at a higher speed when the sensing device (12) is not covered by the material loop (11).

5. The method as claimed in Claim 4, characterized in that the speed of the second bending roller (8) is constant; and that it is slower than the high speed of the first bending roller (6).

6. An apparatus for parallel displacement of a material web (1), including a storage reel (2), a splicing apparatus, a first driven bending roller (6), and a second driven bending roller (8) offset in parallel in relation to the first bending roller (6) and to the storage reel (2), said apparatus characterized in that the material web (1) is advanced past a splicing apparatus and is disposed,

AUSTRALIAN PATENT OFFICE

between the drive rollers, to create a freely depending bight or loop (11), the apparatus further including a sensing device (12) which is disposed to control the speed of one of the bending rollers (6,8).

Dated this 16th day of October, 1998

TETRA LAVAL HOLDINGS & FINANCE S.A.

WATERMARK PATENT & TRADEMARK ATTORNEYS
290 BURWOOD ROAD
HAWTHORN VICTORIA 3122
AUSTRALIA

SKP:DHS:DM doc 23 AU4089296.WPC

AUSTRALIAN PATENT OFFICE

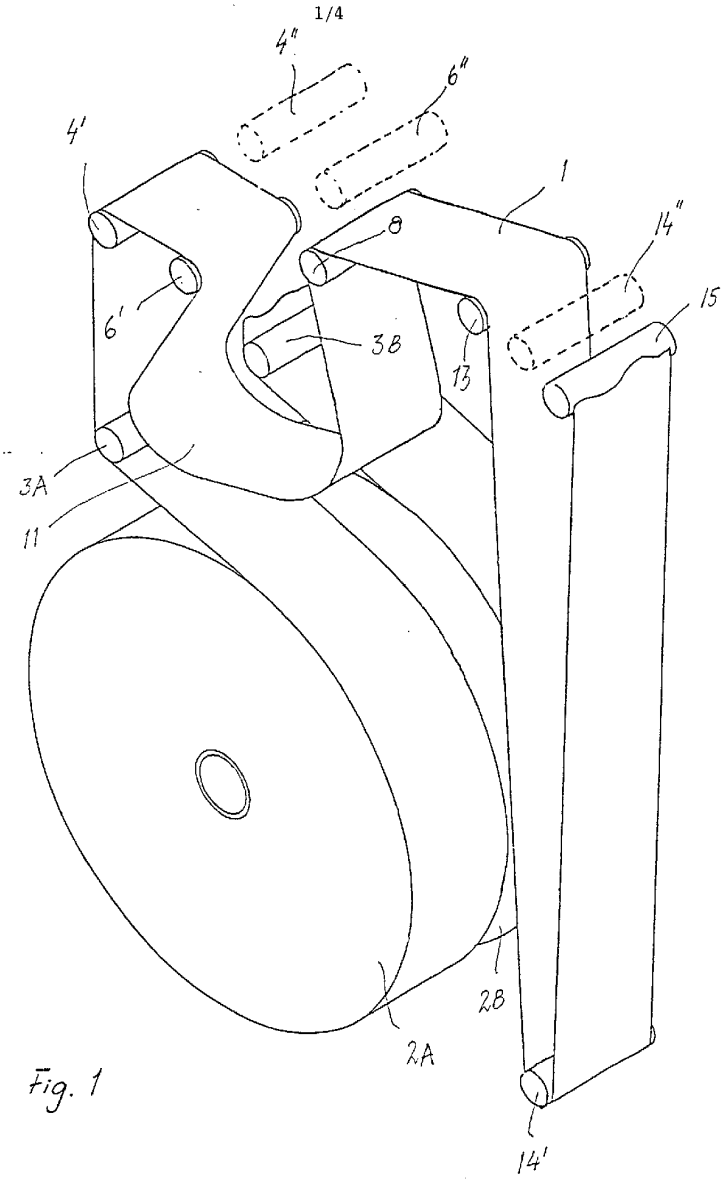

Fig. 1

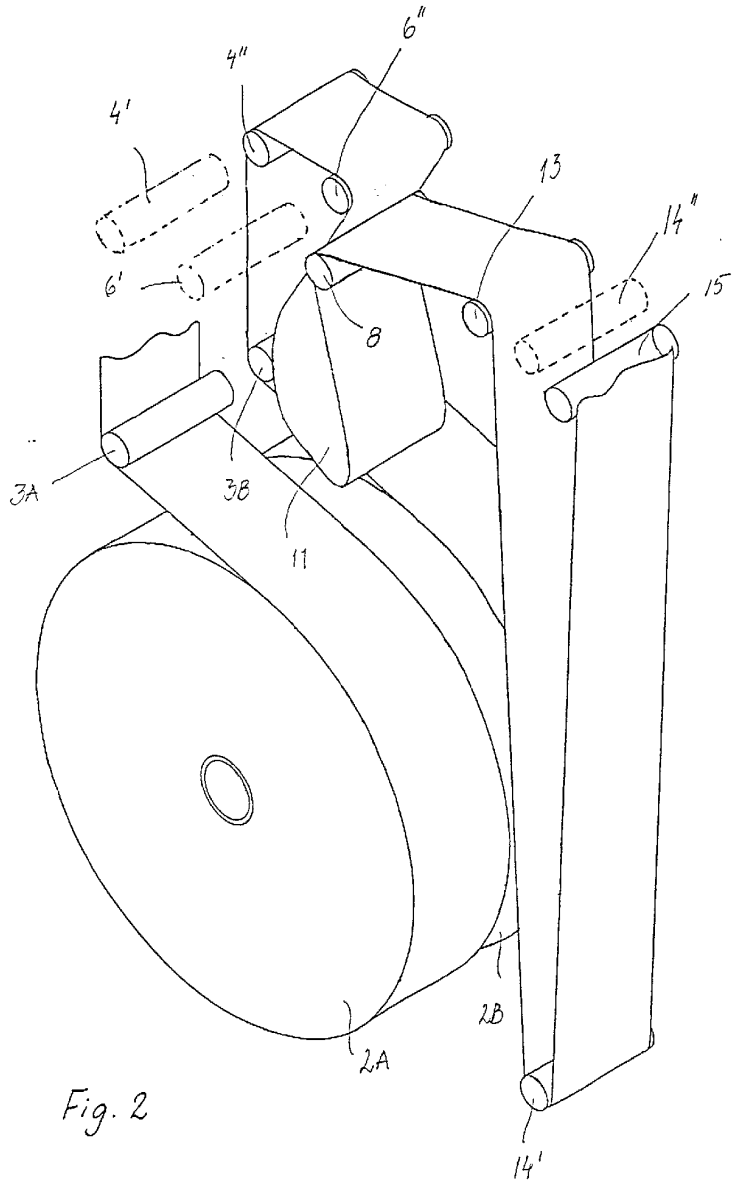

Fig. 2

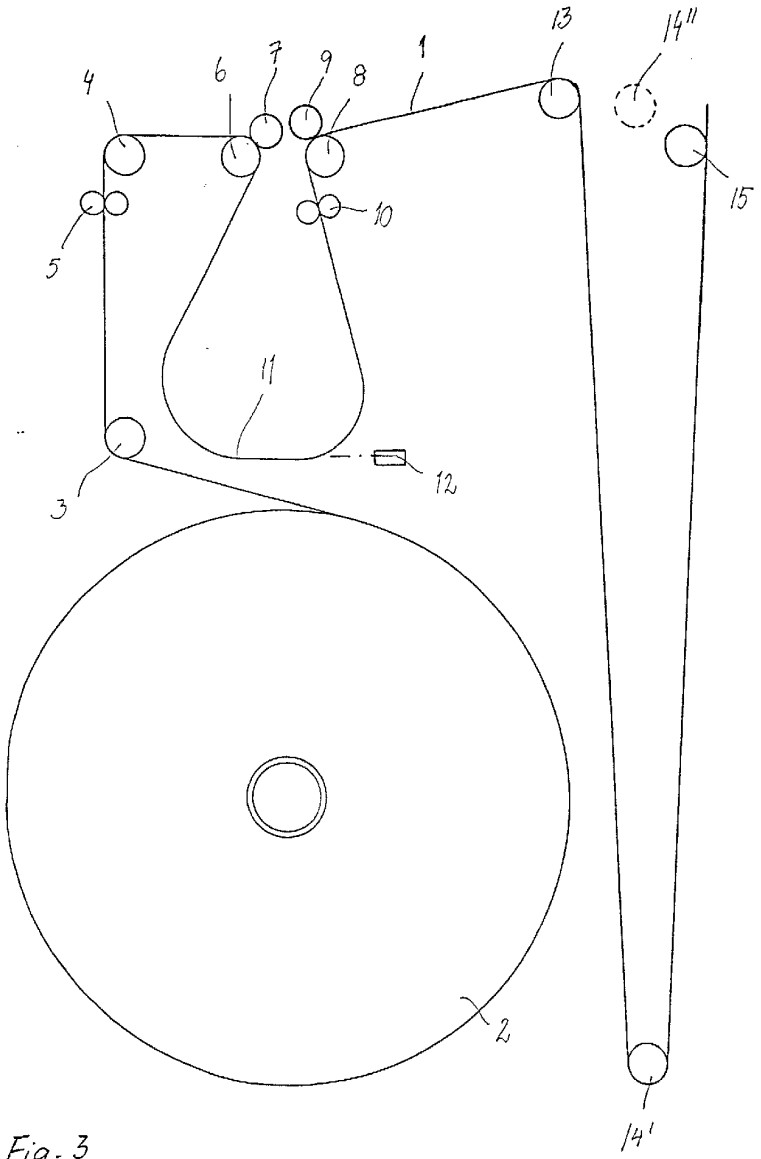

Fig. 3

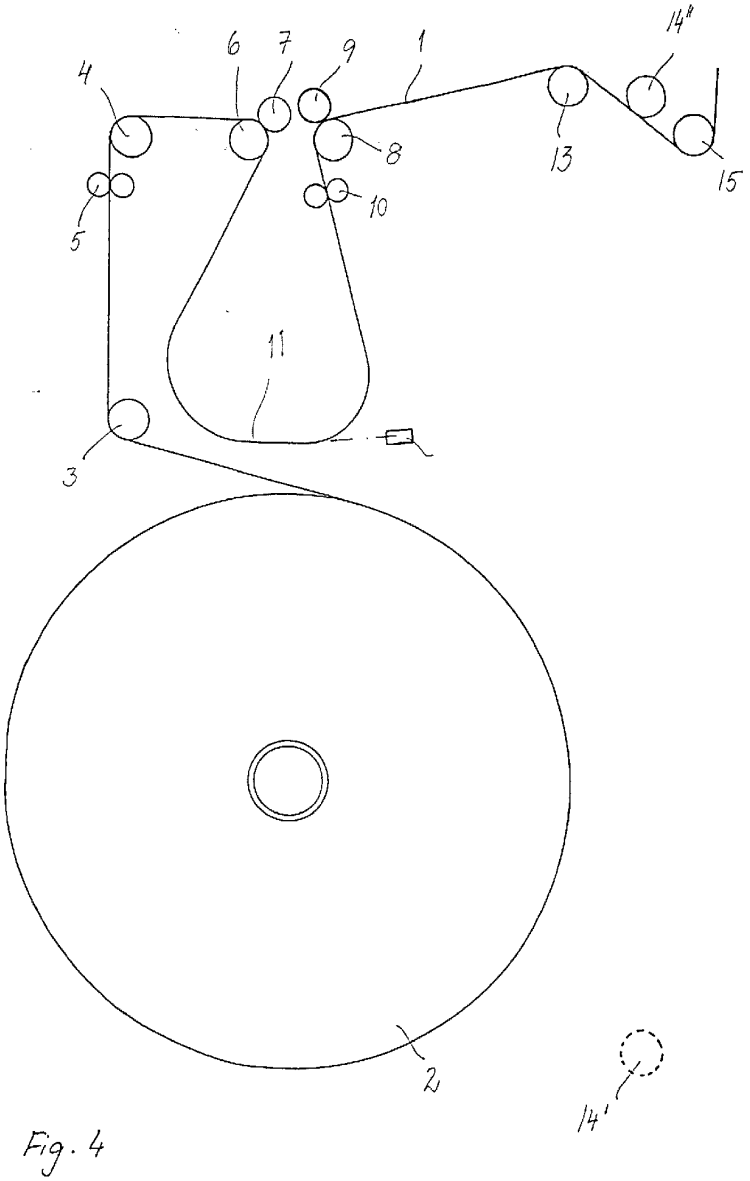

Fig. 4