March 20, 1956 M. K. FOXWORTHY 2,738,789

DISPOSABLE ABDOMINAL BAND

Filed Nov. 12, 1954

FIG. 1

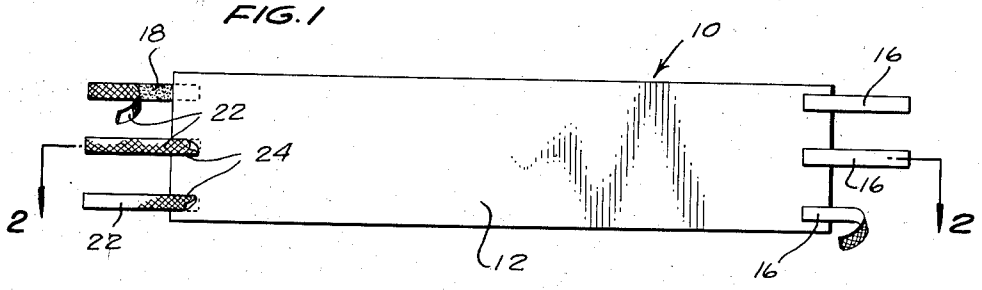

FIG. 2

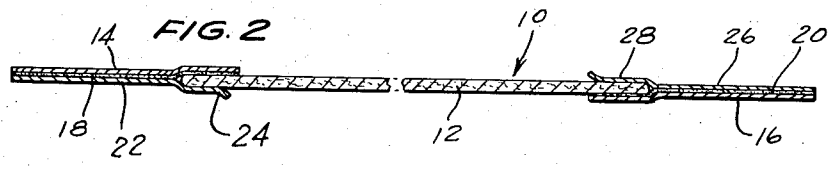

FIG. 3

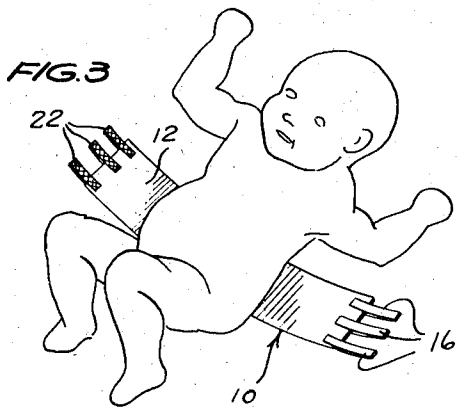

FIG. 4

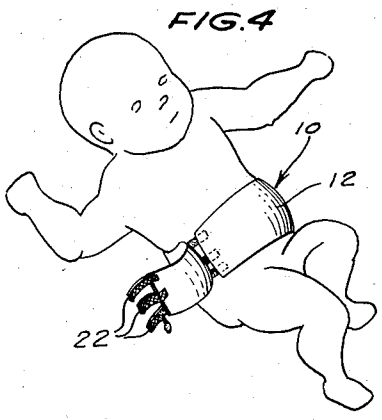

FIG. 5

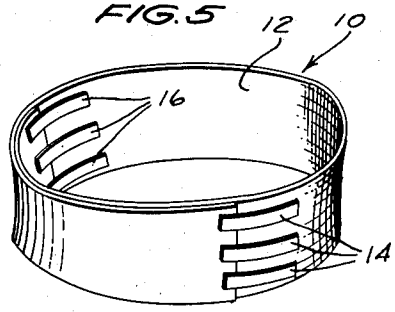

INVENTOR.
MARTHA K. FOXWORTHY
BY

McMorrow, Berman & Davidson
ATTORNEYS

United States Patent Office 2,738,789 Patented Mar. 20, 1956

2,738,789

DISPOSABLE ABDOMINAL BAND

Martha K. Foxworthy, Rio Piedras, Puerto Rico

Application November 12, 1954, Serial No. 468,209

2 Claims. (Cl. 128—167)

This invention relates to a disposable abdominal band and more particularly to a band of the type commonly employed to support the abdominal organs of new born babies.

The primary object of the invention is to assure the rapid application of the band to the abdomen of an infant and at the same time preserve the sanitary conditions required in infant care.

Another object is to facilitate the change of the abdominal band with the change of a diaper so as to avoid any possibility of carrying in the abdominal band any waste which may be discharged into the diaper.

The above and other objects may be attained by employing this invention which embodies among its features a sheet of inexpensive relatively soft flexible material, a strip of flexible material secured to one side of said sheet and extending longitudinally therefrom, a coating of pressure sensitive material carried by the strip on the side thereof adjacent the sheet, a second strip of flexible material secured to the opposite side of the sheet and extending longitudinally from the end thereof remote from the first strip, and a coating of pressure sensitive material carried by the second strip whereby upon encircling the abdomen of an infant with the band, the adhesive coatings will engage the band and retain it in position on the infant.

Other features include covers removably carried by the adhesive coatings, and portions of said covers overlapping adjacent ends of the band to define tabs by which the covers may be stripped from the strips.

In the drawings:

Figure 1 is a side view of a band embodying the features of this invention;

Figure 2 is a longitudinal sectional view taken substantially on the line 2—2 of Figure 1;

Figure 3 is a perspective view illustrating the position of an infant on the band preparatory to the application of the band to the abdomen;

Figure 4 is a view similar to Figure 3, showing the band in partially encircled relation to the abdomen of the infant; and

Figure 5 is a perspective view of the band showing the manner in which the opposite ends of the band are connected to cause the band to encircle the abdomen of the infant.

Referring to the drawings in detail, this improved disposable abdominal band designated generally **10** comprises an elongated sheet **12** of an inexpensive flexible relatively soft material which, as illustrated in the drawings, is adapted to encircle the abdomen of an infant. Carried by the sheet **12** and extending longitudinally therefrom on opposite sides thereof are strips **14** and **16** which, as illustrated in Figure 2, extend from opposite ends of the sheet **12**. Carried by the strips **14** and **16** on the sides thereof adjacent the sheet **12** are coatings **18** and **20**, respectively, of a pressure sensitive adhesive which, when the band encircles the abdomen of the infant, adheres to intermediate portions of the sheet **12**, as will be readily understood upon reference to Figures 4 and 5.

In order to facilitate the transportation of the band **10**, the coatings **18** are covered by suitable flexible covers **22**, such as crinoline, and carried by the covers **22** and

overlapping a portion of the adjacent end of the sheet **12** are overlapping portions defining tabs **24**, by means of which the covers **22** may be stripped from the adhesive coatings **18** on the strips **14**. Similar covers **26** are adhesively attached to the adhesive coatings **20** of the strips **16** and like the covers **22** are extended over the adjacent end of the sheet **12** to define tabs **28**, by means of which the covers **26** may be stripped from their respective adhesive coatings **20**.

In use, it will be evident that the band is placed on a suitable supporting surface and the infant is placed on the band substantially as illustrated in Figure 3. The sheet **12** is then extended across the abdomen of the infant, as illustrated in Figure 4, and the covers **26** carried by the tabs or strips **16** are stripped from their respective coatings **20** so that as the opposite end of the band is extended around the abdomen of the infant, it will adhere to the strip **16**. Continuing on around the abdomen of the infant, the covers **22** are stripped from the adhesive coatings **18** of the strips **14** and the strips are moved into adhesive contact with the flexible sheet **12** to secure the band in place. Obviously, the band or sheet **12** is preferably constructed from a relatively inexpensive material so that it may be disposed of with each diaper change and thus avoid retaining any discharge in contact with the infant.

While in the foregoing there has been shown and described the preferred embodiment of this invention, it is to be understood that minor changes in the details of construction, combination and arrangement of parts may be resorted to without departing from the spirit and scope of the invention as claimed.

What is claimed is:

1. As a new article of manufacture, a disposable abdominal band for an infant comprising an elongated sheet of relatively soft flexible material, a strip of flexible material secured to one side of said sheet and extending longitudinally therefrom, a coating of pressure sensitive material carried by the strip on the side thereof adjacent the sheet, a second strip of flexible material secured to the opposite side of the sheet and extending longitudinally from the end thereof remote from the first strip, and a coating of pressure sensitive adhesive material carried by the second strip on the side thereof adjacent the sheet whereby upon encircling the abdomen of an infant with the band the adhesive coatings will engage the band and retain it in position on the infant.

2. As a new article of manufacture, a disposable abdominal band for an infant comprising an elongated sheet of relatively soft flexible material, a strip of flexible material secured to one side of said sheet and extending longitudinally therefrom, a coating of pressure sensitive material carried by the strip on the side thereof adjacent the sheet, a second strip of flexible material secured to the opposite side of the sheet and extending longitudinally from the end thereof remote from the first strip, a coating of pressure sensitive adhesive material carried by the second strip on the side thereof adjacent the sheet whereby upon encircling the abdomen of an infant with the band the adhesive coatings will engage the band and retain it in position on the infant, covers removably carried by the adhesive coatings, and portions of said covers overlapping adjacent ends of the band to define tabs by which the covers may be stripped from the strips.

References Cited in the file of this patent

UNITED STATES PATENTS

437,994	Jacobs	Oct. 7, 1890
986,655	Taylor	Mar. 14, 1911
1,753,106	Barth	Apr. 1, 1930