(12) INTERNATIONAL APPLICATION PUBLISHED UNDER THE PATENT COOPERATION TREATY (PCT)

(19) World Intellectual Property Organization
International Bureau

(43) International Publication Date
26 May 2011 (26.05.2011)

PCT

(10) International Publication Number
WO 2011/062915 A1

(51) International Patent Classification:
H01L 33/00 (2010.01)

(21) International Application Number:
PCT/US2010/056893

(22) International Filing Date:
16 November 2010 (16.11.2010)

(25) Filing Language: English

(26) Publication Language: English

(30) Priority Data:
61/262,855 19 November 2009 (19.11.2009) US
12/945,641 12 November 2010 (12.11.2010) US

(71) Applicant *(for all designated States except US)*: **INTEMATIX CORPORATION** [US/US]; 46410 Fremont Blvd., Fremont, California 94538 (US).

(72) Inventors; and
(75) Inventors/Applicants *(for US only)*: **WANG, Gang** [CN/US]; 416 Capella Way, Milpitas, California 95035 (US). **LI, Yi-Qun** [US/US]; 30 Trish Lane, Danville, California 94506 (US).

(74) Agents: **FLIESLER, Martin C.** et al.; Fliesler Meyer LLP, 650 California Street, 14th Floor, San Francisco, California 94108 (US).

(81) Designated States *(unless otherwise indicated, for every kind of national protection available)*: AE, AG, AL, AM, AO, AT, AU, AZ, BA, BB, BG, BH, BR, BW, BY, BZ, CA, CH, CL, CN, CO, CR, CU, CZ, DE, DK, DM, DO, DZ, EC, EE, EG, ES, FI, GB, GD, GE, GH, GM, GT, HN, HR, HU, ID, IL, IN, IS, JP, KE, KG, KM, KN, KP, KR, KZ, LA, LC, LK, LR, LS, LT, LU, LY, MA, MD, ME, MG, MK, MN, MW, MX, MY, MZ, NA, NG, NI, NO, NZ, OM, PE, PG, PH, PL, PT, RO, RS, RU, SC, SD, SE, SG, SK, SL, SM, ST, SV, SY, TH, TJ, TM, TN, TR, TT, TZ, UA, UG, US, UZ, VC, VN, ZA, ZM, ZW.

(84) Designated States *(unless otherwise indicated, for every kind of regional protection available)*: ARIPO (BW, GH, GM, KE, LR, LS, MW, MZ, NA, SD, SL, SZ, TZ, UG, ZM, ZW), Eurasian (AM, AZ, BY, KG, KZ, MD, RU, TJ, TM), European (AL, AT, BE, BG, CH, CY, CZ, DE, DK, EE, ES, FI, FR, GB, GR, HR, HU, IE, IS, IT, LT, LU, LV, MC, MK, MT, NL, NO, PL, PT, RO, RS, SE, SI, SK, SM, TR), OAPI (BF, BJ, CF, CG, CI, CM, GA, GN, GQ, GW, ML, MR, NE, SN, TD, TG).

Published:

— *with international search report (Art. 21(3))*

(54) **Title**: HIGH CRI WHITE LIGHT EMITTING DEVICE AND DRIVE CIRCUITRY

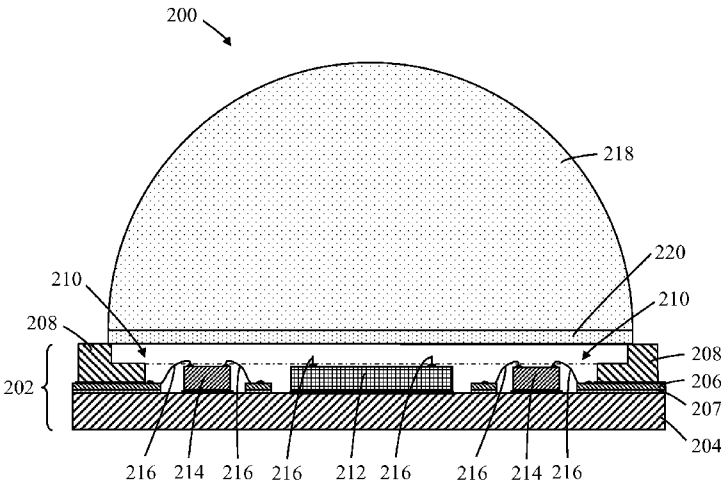

FIG. 2b

(57) **Abstract**: A high CRI white light emitting device comprises: a blue solid state light emitter (LED) operable to generate blue light; a phosphor material operable to absorb a portion of the blue light and to emit green/yellow light and a red solid state light emitter (LED) operable to generate red light. The emission product of the device comprises the combined light generated by the blue and red LEDs and green/yellow light generated by the phosphor material and appears white in color. The device further comprises a drive circuit operable to compensate for variation in the ratio (relative contribution) of red to blue light in the emission product such as to ensure that said variation is less than 20% over an operating temperature range of at least 25°C. The drive circuit can reduce variation in the CRI and CCT of the device's emission product over the operating temperature range.

WO 2011/062915 A1

HIGH CRI WHITE LIGHT EMITTING DEVICES AND DRIVE CIRCUITRY

CLAIM OF PRIORITY

[0001] This application claims priority to U.S. Patent Application No. 12/945,641 entitled "High CRI White Light Emitting Devices and Drive Circuitry", filed November 12, 2010 by Wang et al., and to U.S. Provisional Patent Application No. 61/262,855 entitled "High CRI White Light Emitting Device and Drive Circuitry", filed November 19, 2009 by Wang et al., the specification and drawings of which are incorporated herein by reference.

BACKGROUND OF THE INVENTION

[0002] 1. Field of the Invention

[0003] This invention relates to white light emitting devices with a high (typically ≥80) CRI (Color Rendering Index). More especially the invention concerns white light emitting devices based on solid state light emitting devices, typically LEDs (Light Emitting Diodes), and drive circuitry for operating such devices.

[0004] 2. Description of the Related Art

[0005] White light emitting LEDs ("white LEDs") are known in the art and are a relatively recent innovation. It was not until high brightness LEDs emitting in the blue/ultraviolet (U.V.) part of the electromagnetic spectrum were developed that it became practical to develop white light sources based on LEDs. As taught, for example in US 5,998,925, white LEDs include one or more down converting (i.e. converts photons to photons of a lower energy) phosphor materials, that is photoluminescent materials, which absorb a portion of the radiation emitted by the LED and re-emit radiation of a different color (longer wavelength). Typically, the LED chip generates blue light and the phosphor material(s) absorbs a proportion of the blue light and re-emits light of a different color, typically yellow or a combination of green and yellow light. The portion of the blue light generated by the LED that is not absorbed by the phosphor material combined with the light emitted by the phosphor material provides light which appears to the eye as being nearly white in color.

[0006] Due to their long operating life expectancy (of order 30-50,000 hours) and high luminous efficacy (70 lumens per watt and higher) high brightness white LEDs are increasingly being used to replace conventional fluorescent, compact fluorescent and incandescent light sources. Today, most lighting fixture designs utilizing white LEDs comprise systems in which a white LED (more typically an plurality of white LEDs) replaces the conventional light source component. Moreover, due to their compact size, compared with conventional light sources,

white LEDs offer the potential to construct novel and compact lighting fixtures.

[0007] The ability of a light source to render the color of an object is measured using the Color Rendering Index (CRI) which gives a measure of how a light source makes the color of an object appear to the human eye and how well subtle variations in color shade are revealed. CRI is a relative measurement of the light source's ability to render color compared with a black body radiator. In applications where accurate color rendition is required, such as for example retail lighting, museum lighting and lighting of artwork, a high CRI (typically at least 80) is highly desirable.

[0008] A disadvantage of white LEDs can be their relatively low CRI, typically <75, compared with an incandescent source whose CRI >95. The low CRI is due to the absence of light in the red (>600nm) part of the spectrum. To improve the CRI of a white LED it is known to incorporate a red light emitting phosphor material. However compared with yellow and green down converting phosphor materials, red light emitting phosphor materials have disadvantages. Firstly the energy loss associated with the phosphor material down converting blue light (450nm, energy 2.76eV) to red light (630nm, energy 1.97eV) is larger than that associated with converting blue light to yellow light (550nm energy 2.25eV). This is generally referred to as Stokes loss and the higher Stokes loss associated with red light emitting phosphor materials can reduce the luminous efficacy (lm/watt) of the source. Secondly, since the human eye is less sensitive to red light compared with green or yellow light this requires a larger quantity of red phosphor material to give an equal effect on the eye.

[0009] US 6,513,949 and US 6,692,136 teach hybrid white LED lighting systems comprising a combination of one or more LEDs (red or green) and a phosphor-LED consisting of a blue LED and at least one phosphor (green or amber).

[0010] US 6,577,073 disclose an LED lamp that includes blue and red LEDs and a phosphor. The blue LED produces an emission falling within a blue wavelength range. The red LED produces an emission falling within a red wavelength range. The phosphor is photo-excited by the emission of the blue LED to exhibit photoluminescence having an emission spectrum in an intermediate wavelength range between the blue and red wavelength ranges.

[0011] US 7,213,940 disclose a white light emitting device that comprises first and second groups of solid state light emitters (LEDs) which emit light having a dominant wavelength in a range 430 to 480nm (blue) and 600 to 630nm (red) and a phosphor material which emits light with a dominant wavelength in a range 555 to 585nm (yellow).

[0012] Although using a red emitting LED can improve both luminous efficacy and CRI the inventors have appreciated that such a device has limitations. Most notably the Correlated Color

Temperature (CCT) and CRI of light generated by such a device can vary significantly with operating temperature. As represented in FIG. **1a** the change in emission intensity of blue and red light emitting LEDs with operating temperature is different. Typically the emission intensity of a red LED decreases much more quickly than a blue LED with increased operating temperature. For example over an operating temperature range of 25°C to 75°C the emission intensity of a GaN-based blue LED can decrease by about 5% whilst the emission intensity of a AlGaInP-based red LED can decrease by about 40%. In a white light device based on blue and red LEDs these different emission/temperature characteristics will, as shown in FIG. **1b**, result in a change in the spectral composition of the emission product and hence an increase in CCT with increased operating temperature. As is known the CCT of a white light source is determined by comparing its hue with a theoretical, heated black-body radiator. CCT is specified in Kelvin (K) and corresponds to the temperature of the black-body radiator which radiates the same hue of white light as the light source. Moreover as shown in FIG. **1b** a reduction in the relative proportion of red light in the emission product with increasing operating temperature will result in a decrease in CRI.

[0013] A need exists therefore for a high CRI white light emitting device based on solid state light emitters that at least in part overcomes the limitations of existing devices.

SUMMARY OF THE INVENTION

[0014] The present invention arose in an endeavor to provide a white light emitting device with a high CRI, typically 80 or higher, that at least in part overcomes the limitations of the known devices.

[0015] According to the invention a white light emitting device comprises: at least one blue solid state light emitter operable to generate blue light with a dominant wavelength in a range 400 to 480nm; at least one phosphor material operable to absorb a portion of the blue light and to emit light with a dominant wavelength in a range 490 to 590nm; and at least one red solid state light emitter operable to generate red light with a dominant wavelength in a range 600 to700nm; wherein the emission product of the device comprises the combined light generated by the blue and red light emitters and light generated by the at least one phosphor material and appears white in color; and a drive circuit operable to compensate for variation in the ratio of red to blue light in the emission product such that over an operating temperature range of at least 25°C said variation is less than 20%. Ideally the drive circuit is configured to maintain the ratio (relative contribution) of red and blue light in the emission product constant over the operating temperature range. In practice the ratio of red to blue light in the emission product will vary over

the operating temperature range and the drive circuit is configured such that said variation is a low as possible preferably less than 10%, more preferably less than 5% and advantageously less than 1%. Ideally the operating temperature range is as large as possible and is at least 20°C, preferably at least 25°C, more preferably at least 50°C and even more preferably at least 100°C. Advantageously the device is configured such that the emission product has a minimum color rendering index of at least 80, preferably at least 85, more preferably at least 90 and ideally 95 or higher.

[0016] The drive circuit is operable to control the power of at least one of the red and blue light emitters in response to a parameter related to the operating temperature of at least one of the blue and red light emitters. Depending on the drive configuration the drive circuit can be operable to control the light emitter's drive current, drive voltage or a combination of both.

[0017] In one drive circuit the parameter comprises the temperature of at least one of the blue or red light emitters. In such circuit arrangements the device further comprises a sensor for sensing the temperature of at least the red and/or blue light emitters. In one device the blue and red light emitters are mounted in thermal communication with a thermally conductive substrate and the sensor is configured to sense the temperature of the substrate. In an alternative device, a respective sensor can be provided for sensing the respective temperature of the blue and red light emitters.

[0018] The temperature sensor can comprise a temperature dependent resistor (thermistor), a thermocouple or other device having an electrical characteristic that is temperature dependent. In drive circuit configurations where the sensor comprises a temperature dependent resistor at least one of the blue and red light emitters can be connected in series with the temperature dependent resistor and said light emitter operated from a constant voltage source. Since the electrical resistance of a solid state light emitter decreases with increasing temperature such a circuit configuration increases the forward drive current of one or both light emitters in response to an increase in operating temperature. In one arrangement the temperature dependent resistor has a negative temperature coefficient and is connected in series with the at least one red light emitter. Alternatively, the temperature dependent resistor has a positive temperature coefficient and is connected in series with the at least one blue light emitter. In a further arrangement the blue and red light emitters are connected in series with a respective temperature dependent resistor. In such an arrangement the temperature dependant resistor connected to the red light emitter has negative temperature coefficient whilst the temperature dependant resistor connected to the blue light emitter has a positive temperature coefficient. Alternatively, each of the temperature dependent resistors can have a negative temperature coefficient.

[0019] In alternative circuit configurations where the sensor comprises a temperature dependent resistor at least one of the blue and red emitters can be connected in parallel with the temperature dependent resistor and said light emitter operated from a constant current source. Such circuit configurations operate as a current divider and alter the forward drive current of one or both light emitters in response to a change in operating temperature. In one arrangement the temperature dependent resistor has a positive temperature coefficient and is connected in parallel with the at least one red light emitter. Alternatively, the temperature dependent resistor has a negative temperature coefficient and is connected in parallel with the at least one blue light emitter. In a further arrangement the blue and red light emitter are connected in parallel with a respective temperature dependent resistor. In one such arrangement the temperature dependant resistor connected in parallel with the red light emitter has positive temperature coefficient whilst the temperature dependant resistor connected in parallel with the blue light emitter has a negative temperature coefficient. Alternatively, each of the temperature dependent resistors can have a positive temperature coefficient.

[0020] In yet a further circuit configuration the blue and red light emitters are connected in parallel and driven from a constant current source and the temperature dependent resistor has a negative temperature coefficient and is connected in series with the at least one red light emitter and configured such that in operation the drive current of the at least one red light emitter increases relative to the drive current of the at least one blue light emitter with increasing temperature. Alternatively the blue and red light emitters are connected in parallel and driven from a constant current source and the temperature dependent resistor has a positive temperature coefficient and is connected in series with the at least one blue light emitter and configured such that in operation the drive current of the at least one blue light emitter decreases relative to the drive current of the at least one red light emitter with increasing temperature. In yet a further configuration the blue and red light emitters are connected in parallel and driven from a constant current source and a respective temperature dependent resistor is connected in series with the blue and red light emitters.

[0021] In circuit configurations that use a temperature dependent resistor to control the drive power of the red and/or blue light emitters the resistance and temperature coefficient are selected such the temperature dependent resistor has a resistance/temperature characteristic that is related to the emission intensity/temperature characteristic of at least one of the blue and red light emitters. In configurations where the power of only one light emitter is controllable the resistance and temperature coefficient are preferably selected such the temperature dependent resistor has a resistance/temperature characteristic that is related to the difference in emission

intensity/temperature characteristic of the blue and red light emitters. In configurations where the power of both light emitters is controllable the resistance and temperature coefficient are selected such the temperature dependent resistor has a resistance/temperature characteristic that is related to the emission intensity/temperature characteristic of a respective light emitter.

[0022] In further devices the drive circuit is operable to compare the measured temperature with a reference temperature and in dependence on the difference in temperature, to control the drive current or drive voltage of one or both light emitters to maintain the relative contributions of red and blue light in the emission product substantially constant. Preferably the drive circuit is operable to control the drive current of the red light emitter(s). Alternatively, the drive circuit is operable to control the drive current of the blue light emitter(s). Conveniently, the drive circuit comprises a voltage comparator operable to compare voltages corresponding to the measured and reference temperatures.

[0023] As is known LEDs are often operated using a constant current source and the inventors have appreciated that a parameter that is related to the operating temperature of the light emitter is the LEDs' forward drive voltage. Accordingly in one arrangement the drive circuit is operable to control the drive current in dependence on the forward drive voltage of at least one of the blue and red light emitters. A benefit of using the forward drive voltage to control the drive current is that it eliminates the need for a temperature sensor enabling the drive circuit to be located remotely to the device. In a preferred configuration the drive circuit is operable to control the drive current in dependence on the difference between the forward drive voltages of the blue and red light emitters. Such a configuration can be implemented using a voltage comparator to compare the forward drive voltages of the blue and red emitters and to control the current of a controllable current source driving the blue and/or red light emitters.

BRIEF DESCRIPTION OF THE DRAWINGS

[0024] In order that the present invention is better understood high CRI white light emitting devices and drive circuitry in accordance with the invention will now be described, by way of example only, with reference to the accompanying drawings in which:

[0025] FIG. **1a** is a plot of emitted light intensity versus operating temperature for blue and red light emitting LEDs as previously described;

[0026] FIG. **1b** is a plot of CCT and CRI of emitted light versus operating temperature for a known white light emitting device comprising blue and red LEDs as previously described;

[0027] FIG. **2a** is a plan view of a white light emitting device in accordance with an embodiment of the invention;

[0028] FIG. **2b** is a sectional view of the device of FIG. **2a** through A-A;

[0029] FIG. **2c** is a sectional view of the device of FIG. **2a** through A-A showing an alternative phosphor configuration;

[0030] FIG. **2d** is a sectional view of the device of FIG. **2a** through A-A showing another alternative phosphor configuration;

[0031] FIG. **2e** is a sectional view of the device of FIG. **2a** through A-A with a remote phosphor configuration;

[0032] FIG. **3a** is a plan view of a white light emitting device in accordance with another embodiment of the invention;

[0033] FIG. **3b** is a sectional view of the device of FIG. **3a** through A-A;

[0034] FIG. **4a** is a plan view of a white light emitting device in accordance with a further embodiment of the invention;

[0035] FIG. **4b** is a sectional view of the device of FIG. **4a** through A-A;

[0036] FIG. **5a** is a circuit diagram of an LED connected in series with a temperature dependent resistor;

[0037] FIG. **5b** is a plot of percentage change of forward drive current ($\Delta i_F/i_F$) versus temperature dependent resistor resistance (R_T) for drive currents of 40mA, 160mA, 350mA, 400mA for the circuit of FIG. **5a**;

[0038] FIG. **5c** is a plot of percentage change of forward drive current $\Delta i_F/i_F$ versus proportion of power dissipated by the temperature dependent resistor for drive currents of 40mA, 160mA, 350mA, 400mA for the circuit of FIG. **5a**;

[0039] FIG. **5d** is a plot of the proportion of power dissipated by the temperature dependent resistor versus temperature dependent resistor resistance R_T for drive currents of 40mA, 160mA, 350mA, 400mA for the circuit of FIG. **5a**;

[0040] FIG. **5e** to **5j** are constant voltage drive circuits for operating the devices of FIGS. **2** to **4**;

[0041] FIGS. **5k** to **5p** are constant current drive circuits for operating the devices of FIGS. **2** to **4**;

[0042] FIG. **5q** and **5r** are controllable current drive circuits for operating the devices of FIGS. **2** to **4**;

[0043] FIG. **5s** is a schematic plot of normalized LED forward drive voltage V_F versus operating temperature for blue and red light emitting LEDs;

[0044] FIGS. **5t** to **5x** are controllable current drive circuits for operating the devices of FIGS. **2** to **4**; and

[0045] FIG. **5y** is a schematic plot of difference in LED forward drive voltage V_{FB}-V_{FR} versus operating temperature for blue and red light emitting LEDs.

DETAILED DESCRIPTION OF THE INVENTION

[0046] Embodiments of the invention are directed to white light emitting devices comprising at least one blue solid state light emitting device that is operable to generate blue light with a dominant wavelength in a range 400nm to 480nm (blue); at least one phosphor material operable to absorb a portion of the blue light emitted by the blue light emitter(s) and to emit light with a dominant wavelength in a range 490nm to 590nm (bluish green to orange yellow); and at least one red solid state light emitter that is operable to generate red light with a dominant wavelength in a range 600nm to 700nm (red). The emission product of the device, which appears white in color, comprises the combined light generated by the blue and red light emitters and the light generated by the phosphor material. Typically the device is configured to have a CRI of at least 80. The device further comprises drive circuitry that is operable to control the power (forward drive current, forward drive voltage or a combination of both) of the red and/or blue light emitters in response to a parameter that is related to the operating temperature of the blue and/or red light emitters such as to maintain the relative contributions (ratio) of red and blue light in the emission product substantially constant. Such a device can produce an emission product whose CRI and CCT are substantially constant. Typically the variation in CRI and/or CCT is less than 10%. The parameter used to control the drive power of the light emitter(s) can comprise an operating temperature of the light emitter(s). In other arrangements where the light emitters are driven in a constant current configuration the parameter can comprise the forward drive voltage which is related to the light emitter's operating temperature. Typically the drive circuitry can be incorporated in the device packaging or provided separately to the device, for example, as a part of power supply used to operate the device.

[0047] Light emitting devices

[0048] Examples of light emitting devices in accordance with the invention will now be described with reference to FIGS. **2a** to **2e**, **3a**, **3b**, **4a** and **4b** of the accompanying drawings. Throughout this specification like reference numerals preceded by the figure number are used to denote like parts.

[0049] A white light emitting device **200** in accordance with an embodiment of the invention is now described with reference to FIGS. **2a** and **2b** which respectively show a schematic plan view of the device and a sectional view through A-A. The device **200** is configured to generate white light with a Correlated Color Temperature (CCT) of ≈2700K, a minimum emission

luminous flux of ≈750 lumens (lm), a minimum luminous efficacy of 100 lm/W and a minimum CRI of 80.

[0050] The device **200** comprises a package **202** (FIG. **2b**) such as for example is described in co-pending United States patent application Serial No. 12/781,194 filed May 16, 2010 entitled "Light Emitting Device" (Hwa SU et al.) the entire content of which is incorporated herein by way of reference thereto. The package **202** comprises a layered structure comprising in order a 1cm square copper (Cu) substrate **204**, a circuit layer **206** and a square ceramic (Al_2O_3) top **208**. The ceramic top **208** includes a circular through hole such that when the top **208** is mounted to the copper substrate **204** it defines a shallow circular recess **210**. A blue (dominant wavelength in a range 450nm-480 nm, typically about 465nm) light emitting LED chip **212** is mounted on the center of the floor of the recess **210** in direct thermal communication with the copper substrate **204**. The blue LED chip **212** can comprise, for example, a GaN (gallium nitride) based monolithic LED chip array such as an MC (multi chip) chip manufactured by Epistar Corporation® of Taiwan. Such an LED multi chip typically has a dominant emission wavelength of 450nm, 460nm or 470 nm and a radiant flux of 1500mW to 2000mW.

[0051] The device further comprises two red (600nm-700nm) light emitting LED chips **214** mounted adjacent the blue LED chip **212** on the floor of the recess **210** in direct thermal communication with the copper substrate **204**. The red LED chips **214** can comprise, for example, an AlGaInP (aluminum gallium indium phosphide) based LED chips such as Epistar Corporation's® ES-LASOPH42 chip. Such LED chips typically have a dominant emission wavelength of 615nm and an emission luminous flux of 35lm to 45lm.

[0052] The LED chips **212**, **214** are electrically connected to the circuit layer **206** by bond wires **216**. The circuit layer **206** can comprise an arrangement of thin copper tracks on one or more thin electrically insulating layer(s) **207** and is configured to interconnect the LEDs in a desired circuit configuration.

[0053] The device **200** further comprises a dome-shaped (generally hemispherical) lens **218** which has a uniform thickness layer of phosphor material **220** on its planar base. The phosphor or photoluminescent material **220** is operable to absorb at least a portion of the blue light emitted by the LED chip **212** and to emit light with a dominant wavelength in a range 490nm to 590nm (bluish green to orange yellow).

[0054] The devices of the invention are particularly suited to use with inorganic phosphor materials such as for example silicate-based phosphor of a general composition $A_3Si(O,D)_5$ or $A_2Si(O,D)_4$ in which Si is silicon, O is oxygen, A comprises strontium (Sr), barium (Ba), magnesium (Mg) or calcium (Ca) and D comprises chlorine (Cl), fluorine (F), nitrogen (N) or

sulfur (S). Examples of silicate-based phosphors are disclosed in United States patents US 7,575,697 "Europium activated silicate-based green phosphor" (assigned to Intematix Corp.), US 7,601,276 "Two phase silicate-based yellow phosphor" (assigned to Intematix Corp.), US 7,655,156 "Silicate-based orange phosphor" (assigned to Intematix Corp.) and US 7,311,858 "Silicate-based yellow-green phosphor" (assigned to Intematix Corp.) the specification and drawings of each of which is incorporated herein by reference. The phosphor can also comprise an aluminate-based material such as is taught in our co-pending patent application US2006/0158090 "Aluminate-based green phosphor", an aluminum-silicate phosphor as taught in co-pending application US2008/0111472 "Aluminum-silicate orange-red phosphor" or a nitride-based red phosphor material such as is taught in our co-pending United States patent application 12/632,550 filed December 7, 2009. It will be appreciated that the phosphor material is not limited to the examples described herein and can comprise any phosphor material including nitride and/or sulfate phosphor materials, oxy-nitrides and oxy-sulfate phosphors or garnet materials (YAG).

[0055] The phosphor material **220**, which is in powder form, is thoroughly mixed in known proportions with a liquid binder material to form a suspension and the resulting phosphor composition deposited onto the surface of the lens **218** using for example spin coating, screen printing, inkjet, letterpress, gravure or flexograph printing. The liquid binder material can comprise a U.V. or thermally curable liquid polymer such as a U.V. curable acrylic adhesive or silicone.

[0056] In operation light emitted by the device **200**, which appears white in color, comprises the combined light emitted by the blue LED chip **212**, red LED chips **214** and green/yellow light generated by the phosphor material **220**.

[0057] Alternatively as shown in FIG. **2c** the phosphor material **220** can be incorporated in the lens **218** which is fabricated from a light transmissive polymer material such as an optical grade silicone, acrylic, polycarbonate, poly(methyl methacrylate) (PMMA). In the finished lens **218** the phosphor material is homogeneously distributed throughout the volume of the lens.

[0058] In another arrangement the lens **218** can comprise a dome-shaped (generally hemispherical) shell and the phosphor material phosphor material **220** can be deposited as one or more uniform thickness layers on the inner curved surface of the lens (FIG. **2d**).

[0059] As illustrated in FIG. **2e** and to reduce the transfer of heat generated by the LEDs to the phosphor material, it is further envisioned to provide the phosphor material remote to the device **200** in the form of an optical component such as, for example, a light transmissive window **221** that includes one or more layers of phosphor material **220**. Alternatively the

phosphor material can be incorporated in the light transmissive window **221**. The window **221** including the phosphor material **220** is physically separated from the device **200**, by an air gap of length **L** that is typically at least 5mm to provide adequate thermal isolation of the phosphor material. Locating the window remote to the device provides a number of benefits namely reduced thermal degradation of the phosphor material. Additionally compared with devices in which the phosphor material is provided in close or direct contact with the light emitting surface of the LEDs, providing the phosphor material remote to the device reduces absorption of backscattered light by the device. Furthermore locating the phosphor material remotely enables generation of light of a more consistent color and/or CCT since the phosphor material is provided over a much greater area as compared to providing the phosphor directly to the light emitting surface of the LED chip(s). The window **221** is fabricated from a light transmissive polymer material such as an optical grade silicone, acrylic, polycarbonate, poly(methyl methacrylate) (PMMA) or a glass such as fused silica or a borosilicate glass such as Pyrex® (Pyrex® is a brand name of Corning Inc). Typically the window **221** and device **200** can be incorporated in a lighting fixture or lighting module.

[0060] A white light emitting device **300** in accordance with another embodiment of the invention is now described with reference to FIGS. **3a** and **3b** which respectively show a schematic plan view of the device and a sectional view through a line A-A. The device **300** is configured to generate white light with a Correlated Color Temperature (CCT) of ≈2700K, a minimum emission luminous flux of ≈750 lm, a minimum luminous efficacy of 100lm/W and a minimum CRI of 80.

[0061] The device **300** is virtually identical to the arrangement of FIGS. **2a** and **2b** except that it contains four lower power red (600nm-700 nm) light emitting LED chips **314**. The LED chips **314** are mounted around the blue LED chip array **312** on the floor of the recess **310** in direct thermal communication with the copper substrate **304**. In this embodiment the red LED chips **314** can comprise, for example, an AlGaInP (aluminum gallium indium phosphide) based LED chips such as Epistar Corporation's® ES-LASOPH28 chip. Such LED chips typically have a dominant emission wavelength of 615nm and an emission luminous flux of 25 to 30 lm. In the embodiment illustrated the lens **318** is formed (molded) in situ on the package **302** by filling the recess **310** with the phosphor/polymer mixture.

[0062] A white light emitting device **400** in accordance with a third embodiment of the invention is now described with reference to FIGS. **4a** and **4b** which respectively show a schematic plan view of the device and a sectional view through a line A-A. The device **400** is configured to generate white light with a Correlated Color Temperature (CCT) of ≈2700K, a

minimum emission luminous flux of ≈750lm, a minimum luminous efficacy of 100lm/W and a minimum CRI of 80.

[0063] The device **400** comprises an LTCC (low temperature co-fired ceramic) package **402** for example as described in co-pending United States patent application Publication No. US 2009/0294780 (filed May 27, 2008) the entire content of which is incorporated herein by way of reference thereto. In the embodiment shown the package **402** is a square multilayered ceramic package having a square array of twenty five (five rows by five columns) circular recesses **410**. Each recess **410** is configured to house a respective LED chip.

[0064] The package **402** comprises a 14mm square ceramic body **408** containing one or more circuit layers **406** composed of silver (Ag). On the floor of each recess **410** there is provided a silver mounting pad **422**. As illustrated the lower face of the package can include a thermally conductive base **424**. Typically the mounting pads **422** are connected in thermal communication with the base by thermally conductive vias **426**. Twenty blue (450nm-480 nm) light emitting LED chips **412** are mounted on the floor of a respective recess **410** in direct thermal communication with the silver mounting pad **422**. The blue LEDs **412** can comprise, for example, InGaN (indium gallium nitride) based chips such as Epistar Corporation's® ES-CABLV24B H9 chip. Such an LED multi chip typically has a dominant emission wavelength of 450nm, 460nm or 470 nm and a radiant flux of 95mW to 110mW.

[0065] The device further comprises five red (600nm-700 nm) light emitting LED chips **414** mounted within a respective recess **410** in direct thermal communication with the silver mounting pad **422**. The red LEDs **414** can comprise, for example, an AlGaInP (aluminum gallium indium phosphide) based LED chip such as Epistar Corporation's® ES-LASOPH24. Such LED chips typically have a dominant emission wavelength of 615nm and an emission luminous flux of 10lm to 17lm. As shown the five red LED chips **414** are located within the recesses **410** located at the center position of the array and each of the four corners of the square (three rows by three columns) surrounding the center recess.

[0066] The LED chips **412**, **414** are electrically connected by the circuit layer **406**.

[0067] Drive circuits

[0068] Exemplary drive circuits for operating the device of the invention are now described with reference to FIGS. **5a** to **5y**. Each of the drive circuits is operable to control the drive power of at least one of the red and/or blue LED chips in response to a parameter that is related to the operating temperature **T** of at least one of the red and/or blue LED chips such as to minimize variation in the ratio of red to blue light in the emission product of the device over the operating temperature range of the device. Depending on its complexity the drive circuit can be housed

within the device package or as incorporated as part of the power supply used to operate the device.

[0069] As will be described depending on the drive configuration of the LED chips the drive power can be controlled by controlling the forward drive current $\mathbf{i_F}$, forward drive voltage $\mathbf{V_F}$ or a combination of both of the red and/or blue LED chips. Initial tests indicate that by appropriate circuit configuration the light emitting device of the invention can produce an emission product in which the CRI and CCT have a variation of less than 10% or even less than 5% for a change in operating temperature of 50°C ($\Delta T=50°C$). In the embodiments described the parameter used to control the LED chip drive current can comprise the operating temperature of the red and/or blue LED chips or the forward drive voltage V_F of the LED chip(s) which is related to the LED chip operating temperature.

[0070] As is known LEDs can be driven in a constant voltage or constant current configurations. Firstly drive circuits that are essentially constant voltage configurations are described.

[0071] Constant voltage drive circuits

[0072] In drive circuits in which the LED chips are driven by a constant drive voltage V the forward drive current i_F and/or drive voltage V_F of the LED can be controlled to minimize the variation in the ratio of red to blue light in the emission product of the device over the device's operating temperature range. In such circuit configurations the temperature of one or both LED chips can be used to control the forward drive current and/or voltage of the LED chips and the temperature is conveniently sensed using a temperature dependent resistor (thermistor). FIG **5a** shows an LED connected in series with a temperature dependent resistor $\mathbf{R_T}$ that is driven from a constant voltage source **V**. For such a circuit the forward drive voltage $\mathbf{V_F}$ of the LED is given by the relationship:

[0073] $V_F = V - V_{RT} = V - i_F R_T$

[0074] where V is the constant drive voltage, $\mathbf{V_{RT}}$ is the voltage drop across the temperature dependent resistor and R_T is the resistance of the temperature dependent resistor. As is known the resistance of a temperature dependent resistor is given by:

[0075] $R_T = R_0(1+K(T-T_0))$

[0076] where T is the temperature and K the temperature coefficient of the temperature dependent resistor. The effective resistance of an LED (V_F/i_F) is a non-linear function of temperature and decreases with increasing temperature. As a result for an LED connected in series with a temperature dependent resistor with a negative temperature coefficient (NTC, i.e. electrical resistance decreases with increasing temperature) the total resistance ($R_T + V_F/i_F$) will

decrease with increasing temperature. Since the LED is driven from a constant voltage source V the forward drive current i_F will increase with increasing temperature. For such a circuit arrangement the forward drive current i_F and forward drive voltage V_F of the LED will change with temperature according to the relationship:

[0077]

$$\frac{1}{i_F}\frac{di_F}{dT} = -\frac{KR_0 + \frac{1}{i_F}\frac{\partial V_F}{\partial T}}{R_T + \frac{\partial V_F}{\partial i_F}}$$

[0078] where $\frac{\partial v_F}{\partial T}$ is the change of forward drive voltage with temperature and $\frac{\partial v_F}{\partial i_F}$ is the change of LED forward drive voltage with forward drive current. Values for $\frac{\partial v_F}{\partial T}$ and $\frac{\partial v_F}{\partial i_F}$ can be empirically determined from the measured forward drive voltage V_F versus temperature T and the forward drive voltage V_F versus forward drive current i_F characteristics of an LED driven from a constant voltage source (i.e. without the thermistor). As a result, the change in forward drive current i_F at different temperatures can be calculated. FIG. **5b** are plots of the percentage change of forward drive current ($\Delta i_F/i_F$) versus thermistor resistance R_T over an operating temperature range 25°C to 75°C (ΔT=50°C) for drive currents i_F of 40mA, 160mA, 350mA and 400mA. In FIG. **5b** the LED is an Epistar Corporation® ES-LASOPH42 red LED chip which has standard current rating of 350mA and the thermistor has a resistance of 10Ω at 25°C and a NTC (negative temperature coefficient) K=-0.0038/°C. As can be seen from FIG. **5b** the percentage change of forward drive current $\Delta i_F/i_F$ over a 50°C temperature variation (ΔT=50°C) is a function of the thermistor resistance R_T and the forward current of the LED. For a thermistor with of resistance $R_T \geq 10\Omega$ a change of current (adjustment) of ≈16% can be achieved over a temperature variation ΔT=50°C.

[0079] As shown in FIGS. **5c** and **5d** whilst a higher resistance thermistor has the capability of adjusting the forward current by a greater amount it will dissipate (consume) a greater proportion of the total power. For example at 25°C approximately 65% of the total power will be dissipated by the thermistor for an LED driven with a forward drive current of 350mA or 400mA. As a result a balance has to be struck between these two effects (amount of current adjustment versus thermistor power consumption). For example if the LED chip is under driven with a drive current of 40mA using a 5Ω (@25°C) thermistor a maximum of 10% of the total power is dissipated by the thermistor and the current i_F can be adjusted by up to 15%. For an LED chip driven with a drive current of 160mA and driven by a 2.2Ω thermistor a maximum of up to 15% of the total power is consumed by the thermistor and i_F can be adjusted by up to 13%. For a drive current of 160mA driven using a 1.1Ω thermistor, the thermistor dissipated up to

15% of the total power and i_F can be adjusted by up to 11%. It will be understood that the resistance of the thermistor and its temperature coefficient are selected according to the type of LED chip, the temperature characteristic of the LED chip and the interconnection of the LED chips (serial, parallel or a combination thereof). In a preferred solution the value of R_T is selected such that the thermistor dissipates less than 15% of the total power but still offers a current adjustment (compensation) of >10%

[0080] FIG. **5e** is a first drive circuit **530** in which the red LED chips **514** of the device **500** are connected in series with an NTC thermistor **532** and operated from a constant voltage source $\mathbf{V_R}$ whilst the blue LED chips **512** are driven directly from a constant voltage source $\mathbf{V_B}$. As described the resistance of the thermistor **532** depends on temperature and is operable to control the forward drive current $\mathbf{i_{FR}}$ of the red LED chips in dependence on the operating temperature of the red and/or blue LED chips. For example in the light emitting devices **200**, **300** (FIGS. **2** and **3**) the thermistor **532** can be mounted in the recess **210**, **310** of the package in thermal communication with the copper substrate **204**, **304**. In such an arrangement the thermistor **532** senses the temperature T of the substrate which is related to the operating temperature of the red and blue LED chips. In the light emitting device **400** (FIG. **4**) the thermistor **532** can be mounted in thermal communication with the silver mounting pad **422** corresponding to the blue or red LED chips or mounted in thermal communication with the thermally conductive base **424**.

[0081] As described above the intensity of light emitted by a red light emitting LED typically decreases much more quickly with an increase in operating temperature than the intensity of light emitted by a blue light emitting LED (FIG. **1a**). In the circuit configuration of FIG. **5e** the thermistor **532** has a negative temperature coefficient and the thermistor's resistance and temperature coefficient are selected to have a resistance/temperature characteristic that is related to the difference between the red and blue LED emission intensity/temperature characteristic. In operation when the temperature of the LED chips **512**, **514** increases the resistance of the thermistor **532** decreases resulting in an increase of forward drive current $\mathbf{i_{FR}}$ of the red LED chip **514**. The change in the forward drive current $\mathbf{i_{FR}}$ results in an increase in emission intensity of the red LED chips. The circuit **530** is configured to minimize any variation in the ratio of red to blue contributions in the emission product over the operating temperature range of the device and thereby reduce variation in the CCT and/or CRI of light emitted by the device. Ideally the circuit would be configured to maintain the relative contributions of red and blue light in the emission product constant over the operating temperature range. Since, over the operating temperature range of the device, it may not be practical to control the current of the LED sufficiently to maintain the ratio of red and blue light contributions in the emission product

constant, in practice the circuit is configured to ensure that any variation in the relative contribution over the operating temperature range is less than a selected value, 20% or lower, preferably less than 10%, more preferably less than 5% and ideally 1% or lower. Since the circuit does not compensate for the decrease of emission intensity of the blue LED chips with increased temperature the overall emission intensity of the device will be lower at higher operating temperatures.

[0082] In an alternative drive circuit **534** as shown in FIG. **5f** a thermistor **536** can be connected in series with the blue LED chip **512** and operated from a constant voltage source $\mathbf{V_B}$ whilst the red LED chips driven from a constant voltage source $\mathbf{V_R}$. The thermistor **536** is operable to measure the operating temperature of the red and/or blue LED chips. In the circuit configuration **534** the thermistor **536** preferably has a positive temperature coefficient (i.e. electrical resistance increases with increasing temperature) and the thermistor is selected to have a resistance/temperature characteristic that is related to the difference between the red and blue LED emission intensity/temperature characteristic. In operation when the temperature of the LED chips **512**, **514** increases the resistance R_T of the thermistor **536** increases resulting in an increase in total resistance (R_T+ V_F/i_F) and a decrease of forward drive current $\mathbf{i_{FB}}$ of the blue LED chip **512.** The decrease of forward drive current results in a decrease in emission intensity of the blue LED chips. The circuit **534** is configured such that over the operating temperature range of the device the variation in the ratio (relative contribution) of light emission from the red and blue LED chips is less than a selected value thereby reducing the variation in the CCT and/or CRI of light emitted by the device. It will be appreciated however that whilst any variation in CCT and/or CRI is minimized the overall emission intensity of the device will decrease with increased operating temperature as the circuit does not compensate for the decrease of emission intensity of the red LED chips.

[0083] FIG. **5g** shows a drive circuit **538** in which a respective thermistor **532, 536** is connected in series with the red and blue LED chips and used to independently control the forward drive current of the red and blue LED chips. The drive circuit **538** is a combination of circuits **530** (FIG. **5e**) and **534** (FIG. **5f**). Each thermistor **532**, **536** can be operable to sense the operating temperature of a respective LED chip group or operable to measure the operating temperature of the red and blue LED chips.

[0084] In one arrangement of drive circuit **538** the thermistor **532** is a NTC device and the thermistor **536** is a PTC device. With such a configuration an increase of operating temperature will result in an increase of the forward drive current $\mathbf{i_{FR}}$ of the red LED chip and a decrease of the forward drive current $\mathbf{i_{FB}}$ of the blue LED chip. The net effect of the change of forward drive

currents reduces any change in the ratio of light emission from the red and blue LED chips and thereby reduces the variation in the CCT and/or CRI of light emitted by the device. Whilst the CCT and/or CRI remain substantially constant the overall emission intensity will decrease due to the decrease of light emission from the blue LED chip. As described above (Fig. **5a**), initial results indicate that a serially connected thermistor enables a maximum change of forward drive current of about 15% to 20% over a temperature range 25°C to 75°C (ΔT=50°C). Over this temperature range the emission intensity of a red LED may drop by 40% whilst the emission intensity of the blue LED chip drops by about 5% (FIG. **1a**) which is equivalent to a variation in the ratio of red to blue light of about 47%. By configuring the circuit to decrease the emission intensity of the blue LED chip and to increase the emission intensity of the red LED chip with increasing temperature enables the overall maximum change of drive current to be increased over a given operating temperature range. For example it is contemplated that such a configuration may be capable of an overall maximum change of drive about 30% to 40% over an operating temperature range of 25°C to 75°C thereby enabling the variation in the ratio of red to blue light to be minimized to a variation of approximately 7%.

[0085] In an alternative arrangement of drive circuit **538** both thermistors **532**, **536** can be NTC devices and are selected to have a resistance/temperature characteristic that is related to the respective LED emission/temperature characteristic. With such a configuration an increase of operating temperature will result in an increase of the forward drive current of both the red LED and blue LED chips. Although such a circuit arrangement can additionally reduce any change of emission intensity, the variation in the CRI and CCT can be greater over the same operating temperature range.

[0086] FIG. **5h** show a further drive circuit **540** in which the forward drive current $\mathbf{i_{FR}}$ of the red LED chips **514** is controlled in dependence on the LED chip temperature and the blue LED chips **512** are driven from a constant voltage source. In the configuration **540** the red LED chip **514** is connected in parallel with a PTC thermistor **542** of resistance R_{TP} and the parallel combination connected in series with the NTC thermistor **532** of resistance R_{TS} and operated from a constant voltage source $\mathbf{V_R}$. The blue LED chips **512** are driven directly from a constant voltage source $\mathbf{V_B}$. In operation when the temperature of the LED chips **512**, **514** increases the resistance of the thermistor **532** decreases and the resistance of the thermistor **542** increases resulting in an increase of forward drive current $\mathbf{i_{FR}}$ of the red LED chip **514**. The forward drive current is given by the relationship:

[0087] $$i_{FR} = \frac{V_R - V_{FR}}{R_{TS}} + \frac{V_{FR}}{R_{TP}}$$

[0088] where $\mathbf{V_{FR}}$ is the forward drive voltage of the red LED chips, R_{TS} is the resistance of the thermistor **532** and is given by the relationship $R_{TS} = R_{0S}(1+K_s(T-T_0))$ and R_{TP} is the resistance of the thermistor **542** and is given by the relationship $R_{TP} = R_{0P}(1+K_P(T-T_0))$. The change of forward drive current i_{FR} with temperature is given by the relationship:

[0089]

$$\frac{1}{i_{FR}}\frac{di_{FR}}{dT} = -\frac{K_S R_{0S} + \frac{1}{i_{FR}}\frac{\partial V_{FR}}{\partial T}\left(1+\frac{R_{TS}}{R_{TP}}\right) + \frac{V_{FR}}{i_{FR}}\frac{K_S R_{0S} - K_P R_{0P}\frac{R_{TS}}{R_{TP}}}{R_{TP}}}{R_{TS} + \frac{\partial V_{FR}}{\partial i_{FR}}\left(1+\frac{R_{TS}}{R_{TP}}\right)}.$$

[0090] To ensure that the thermistors **532**, **542** do not consume too much of the total power (preferably ≤15%):

[0091] $R_{TS} \ll V_{FR}/i_{FR} \ll R_{TP}$,

[0092] $R_{0S}/R_{TS} \approx R_{0P}/R_{TP}$, and

[0093] $\frac{\partial V_{FR}}{\partial T} \ll K_s R_{0S} i_{FR}$, then the equation can be simplified to:

[0094]

$$\frac{1}{i_{FR}}\frac{di_{FR}}{dT} \approx -\frac{K_S R_{0S} + \frac{V_{FR}}{i_{FR}}\frac{K_S - K_P R_{0S}}{R_{TP}}}{R_{TS} + \frac{\partial V_{FR}}{\partial i_{FR}}}$$

[0095] The change (increase) in the forward drive current $\mathbf{i_{FR}}$ results in an increase in emission intensity of the red LED chip(s) **514**. The circuit **540** is configured to ensure that the variation in the ratio (relative contribution) of light emission from the red and blue LED chips over the operating temperature range is within a selected range thereby reducing the variation in the CCT and/or CRI of light emitted by the device. Using two thermistors **532**, **542** enables a greater change of forward drive current for a given change of temperature.

[0096] In an alternative drive circuit **544** as shown in FIG. **5i** the forward drive current $\mathbf{i_{FB}}$ of the blue LED chips **512** is controlled in dependence on the LED chip temperature and the red LED chip **514** driven from a constant voltage source. In the circuit configuration **544** the blue LED chip **512** is connected in parallel with a NTC thermistor **546** (resistance R_{TP}) and the parallel combination connected in series with a PTC thermistor **536** (resistance R_{TS}) and operated from a constant voltage source $\mathbf{V_B}$. The red LED chips **514** are driven directly from a constant voltage source $\mathbf{V_R}$. In operation when the temperature of the LED chips **512**, **514** increases the resistance of the thermistor **536** increases and the resistance of the thermistor **546** decreases resulting in an decrease of forward drive current $\mathbf{i_{FB}}$ of the blue LED chip **512**. The decrease in the forward drive current $\mathbf{i_{FB}}$ results in a decrease in emission intensity of the blue LED chip **512**. The circuit **544** is configured to maintain the relative contribution of red and blue light in the emission product substantially constant over the operating temperature range of the device and

thereby reduce any variation in the CCT and/or CRI of light emitted by the device. As with the circuit configuration **534** (FIG. **5f**) whilst the CCT and/or CRI remain substantially constant the overall emission intensity will drop with increasing temperature.

[0097] FIG. **5j** shows a drive circuit **548** in which the forward drive currents $\mathbf{i_{FR}}$, $\mathbf{i_{FB}}$ of the red and blue LED chips are independently controlled in dependence on LED chip temperature. The circuit **548** is a combination of drive circuits **540** (FIG. **5h**) and **544** (FIG. **5i**) in which the red and blue LEDs chips are each connected in parallel with a respective thermistor **542**, **546** and the parallel combination then connected in series with a respective thermistor **532, 536**. Each pair of thermistors **532**, **542** and **536**, **546** can be operable to sense the operating temperature of a respective LED chip group or operable to measure the operating temperature of the red and blue LED chips.

[0098] In one drive circuit **548** arrangement the thermistors **532**, **546** can be NTC devices and the thermistor **536**, **542** can be PTC devices. With such a configuration an increase of operating temperature will result in an increase of the forward drive current $\mathbf{i_{FR}}$ of the red LED chip and a decrease of the forward drive current $\mathbf{i_{FB}}$ of the blue LED chip. The net effect of the change of forward drive currents $\mathbf{i_{FR}}$, $\mathbf{i_{FB}}$ reduces variation in the ratio of light emission from the red and blue LED chips and thereby reduces the variation in the CCT and/or CRI of light emitted by the device. Whilst the CCT and/or CRI may remain substantially constant the overall emission intensity will decrease due to the decrease of light emission from the blue LED chip. The thermistors can be selected to have a resistance/temperature characteristic that is related to the difference between the emission intensity/temperature characteristics of the red and blue LED chips.

[0099] In a further drive circuit **548** arrangement the thermistors **532**, **536** can be NTC devices and the thermistors **542**, **546** can be PTC devices. With such a configuration an increase of operating temperature will result in an increase of the forward drive currents $\mathbf{i_{FR}}$, $\mathbf{i_{FB}}$ of both the red and blue LED chips **514**, **512**. The thermistors can be selected to have a resistance/temperature characteristic that is related to the respective LED emission intensity/temperature characteristic.

[0100] <u>Constant current drive circuits</u>

[0101] It is often preferred to drive LEDs in a constant current configuration in order to maintain a constant emission intensity. FIGS. **5k** to **5p** show various drive circuit configurations that are driven from a constant current source.

[0102] In a first such drive circuit **550**, as shown in FIG. **5k**, the red LED chips **514** are connected in parallel with a PTC (positive temperature coefficient) thermistor **532** and operated

from a constant current source **552** $\mathbf{I_R}$ whilst the blue LED chips **512** are driven directly from a constant current source **554** $\mathbf{I_B}$. The parallel thermistor/LED **532/514** configuration acts as a current divider such that in operation an increase in temperature causes the resistance of the thermistor to increase which results in a higher proportion of the current I_R to flow through the arm including the red LED chip and an increase in the forward drive current $\mathbf{i_{FR}}$ of the red LED chips. Assuming that the forward drive voltage $\mathbf{V_{FR}}$ of the red LED chip is constant the forward drive current is given by the relationship:

[0103] $$i_{FR} = I_R - \frac{V_{FR}}{R_T}$$

[0104] where R_T is the resistance of the thermistor **532** and given by the relationship $R_T=R_0(1+K(T-T_0))$. The change of forward drive current i_{FR} with temperature is given by the relationship:

[0105] $$\frac{1}{i_{FR}}\frac{di_{FR}}{dT} = \frac{\frac{V_{FR}}{i_{FR}}\frac{KR_0}{R_T} - \frac{1}{i_{FR}}\frac{\partial V_{FR}}{\partial T}}{R_T + \frac{\partial V_{FR}}{\partial i_{FR}}}.$$

[0106] In the drive circuit configuration **550** of FIG. **5k** the thermistor **532** has a resistance and temperature coefficient that are selected to have a resistance/temperature characteristic that is related to the difference between the red and blue LED emission intensity/temperature characteristics. The circuit **550** is configured to minimize variation in the ratio (relative contribution) of red and blue light in the emission product over the operating temperature range and thereby reduce variation in the CCT and/or CRI of light emitted by the device.

[0107] As shown in FIG. **5l** in an alternative drive circuit **556** the blue LED chips **512** are connected in parallel with a NTC thermistor **536** and operated from a constant current source **554** $\mathbf{I_B}$ whilst the red LED chips **514** are driven directly from a constant current source **552** $\mathbf{I_R}$. In operation an increase in temperature causes the resistance of the thermistor **536** to decrease which results in a lower proportion of the current I_B to flow through the arm including the blue LED chips and a decrease in the forward drive current $\mathbf{i_{FB}}$ of the blue LED chips. The decrease of forward drive current results in a decrease in emission intensity of the blue LED chips. The thermistor **532** has a resistance and temperature coefficient that are selected to have a resistance/temperature characteristic that is related to the difference between the red and blue LED emission intensity/temperature characteristics. The circuit **556** is configured to minimize variation in the ratio of red and blue light in the emission product over the operating temperature range of the device and thereby reduce the variation in the CCT and/or CRI of light emitted by the device. It will be appreciated that whilst the CCT and/or CRI remain substantially constant the overall emission intensity of the device will fall with increasing temperature due to the

decrease in emission intensity of the blue LED chip.

[0108] FIG. **5m** shows a drive circuit **558** in which a respective thermistor **532, 536** is connected in parallel with the red and blue LED chips and used to independently control the forward drive current $\mathbf{i_{FR}}$, $\mathbf{i_{FB}}$ of the red and blue LED chips. The drive circuit **558** is a combination of circuits **550** (FIG. **5k**) and **556** (FIG. **5l**) In one such circuit configuration the thermistor **532** is a PTC device and the thermistor **536** is a NTC device. In an alternative configuration both thermistors **532**, **536** are PTC devices and are selected to have a resistance/temperature characteristic that is related to the respective LED emission intensity/temperature characteristic.

[0109] FIG. **5n** is a drive circuit **560** in which the blue LED chips **512** and red LED chips **514** are connected in parallel and operated from a single constant current source **562**. A thermistor **532** is connected in series in the arm of the circuit containing the red LED chips **514** and is operable to control the relative drive currents of the red and blue LED chips in dependence on the operating temperature of the red and/or blue LED chips. In the circuit configuration of FIG. **5n** the thermistor **532** has a negative temperature coefficient and is selected to have a resistance/temperature characteristic that is related to the difference between the red and blue LED chip emission intensity/temperature characteristics. In operation when the temperature of the LED chips **512**, **514** increases the resistance of the thermistor **532** decreases resulting in an increase of forward drive current $\mathbf{i_{FR}}$ of the red LED chip **514** and a corresponding decrease of forward drive current $\mathbf{i_{FB}}$ of the blue LED chip **512**. The relative change in the forward drive currents results in an increase in emission intensity of the red LED chips and a decrease in emission intensity of the blue LED chips. The circuit **560** is configured to minimize variation in the relative contribution (ratio) of light emission from the red and blue LED chips and thereby reduce variation in the CCT and/or CRI of light emitted by the device **500**.

[0110] As shown in FIG. **5o** in an alternative drive circuit **564** the thermistor **536** can be connected in the arm of the circuit containing the blue LED chip **512**. The thermistor **536** is operable to measure the operating temperature of the red and/or blue LED chips. In the circuit configuration **564** the thermistor **536** has a positive temperature coefficient and is selected to have a resistance/temperature characteristic that is related to the difference between the red and blue LED emission/temperature characteristics. In operation when the temperature of the LED chips **512**, **514** increases the resistance of the thermistor **536** increases resulting in a decrease of forward drive current $\mathbf{i_{FB}}$ of the blue LED chip **512** and a corresponding increase of forward drive current $\mathbf{i_{FR}}$ of the red LED chip **514**. The change in the forward drive currents results in an increase in emission intensity of the red LED chips and a decrease in emission intensity of the

blue LED chips. The circuit **564** is configured to minimize variation in the relative contribution of red and blue light contributions in the emission product over the operating temperature range of the device and thereby reduce variation in the CCT and/or CRI of light emitted by the device.

[0111] FIG. **5p** shows a drive circuit **566** in which respective thermistors **532, 536** are used to control the forward current $\mathbf{i_{FR}}$, $\mathbf{i_{FB}}$ of the red and blue LED chips **514**, **512**. Each thermistor **532**, **536** can be operable to sense the operating temperature of a respective LED chip group or operable to measure the operating temperature of the red and blue LED chips. In such a circuit configuration **566** the thermistor **532** is a NTC device and the thermistor **536** is a PTC device. In another circuit arrangement **566** both thermistors **532**, **536** are NTC devices and are selected to have a resistance/temperature characteristic that is related to the respective LED emission intensity/temperature characteristic.

[0112] Controllable current drive circuits

[0113] FIGS. **5q**, **5r** and **5t** to **5x** show various drive circuits based on a controllable current source(s). FIG. **5q** shows a drive circuit **568** in which the blue LED chips **512** are driven directly from a constant current source **554** and the red LED chips **514** are driven from a controllable current source **570** whose current is controllable to compensate for changes in the LED chip operating temperature. A thermistor **536** is connected in series with one or more resistors **572** to form a potential divider arrangement such as to produce a voltage $\mathbf{V_T}$ that is related to the temperature T of the thermistor **536**. As illustrated in FIG. **5q** the thermistor **536** is connected to ground and is a PTC device such that the voltage V_T will increase with increasing temperature. The voltage V_T is compared with a reference voltage $\mathbf{V_{TREF}}$ using a voltage comparator **574** or like device. Typically the reference voltage $\mathbf{V_{TREF}}$ is selected to be representative of the normal operating temperature of the LED chips. The comparator **574** produces an output voltage $\mathbf{V_{CTRL}}$ that is related to the difference between the voltages $\mathbf{V_T}$ and $\mathbf{V_{TREF}}$ and hence related to the difference between the actual and normal operating temperatures. The control voltage $\mathbf{V_{CTRL}}$ is used to control the controllable current source **570** and the forward drive current $\mathbf{i_{FR}}$ of the red LED chips **514**. Since the variation with temperature in emission intensity of the red LED chips **514** will be greater than that of the blue LED chips **512** it is only necessary to control the forward drive current of the red LED chips to minimize the variation in CCT and/or CRI of the device. It is however contemplated in other circuit configurations to alternatively control the forward drive current i_{FB} of the blue LED chips or to independently control the forward drive current of the red and blue LED chips. In the case of the latter the thermistors **532**, **536** can be configured to measure the temperature of a respective color of LED chip or to measure the temperature of the red and blue LED chips.

[0114] In a further drive circuit **576**, as shown in FIG. **5r**, the voltage V_T corresponding to the operating temperature of the LED chip(s) can be converted into a digital value using an A to D (Analogue to Digital) converter **578** and the digital value used by a controller **580** to control a controllable current source **570**. The circuit **576** can further comprise a look-up table **582** that the controller **580** accesses to determine the appropriate forward drive current to minimize the variation in the CCT and/or CRI of light emitted by the device **500**. Since the configuration uses a look-up table containing values that can take account of the non-linear nature of the LED emission intensity/temperature characteristic the drive circuit **576** offers potentially very accurate control of the emission product of the device.

[0115] In each of the drive circuits **530**, **534**, **538**, **540**, **544**, **548**, **550**, **556**, **558**, **560**, **564**, **566**, **568** and **576** described so far the operating temperature T of the LED chips has been measured using a resistive thermal device (thermistor). When an LED is operated in a constant current configuration the forward drive voltage V_F is related to the operating temperature of the LED (FIG. **5s**) and the inventors have appreciated that the LED forward drive voltage V_F can be used as an indicator of LED operating temperature to control operation of the LED. The circuit configurations **584**, **586**, **592**, **594** and **598** of FIGS. **5t** to **5x** operate in such a manner and eliminate the need to measure the LED chip temperature. A further advantage of using the forward drive voltage as an indicator of LED temperature is that all of the control circuitry can be located remote from the light emitting device.

[0116] In the drive circuit **584** of FIG. **5t** the blue LED chips **512** are driven from a constant current source **554** and the red LED chips **514** are driven from a controllable current source **570** whose current is controllable in dependence on the forward drive voltage $\mathbf{V_{FR}}$ of the red LED chips to compensate for changes in the LED chip operating temperature. The forward drive voltage $\mathbf{V_{FR}}$ is compared with a reference voltage $\mathbf{V_{VREFR}}$ using a voltage comparator **574** or like device. Typically the reference voltage $\mathbf{V_{VREFR}}$ is selected to be representative of the forward drive voltage at the normal operating temperature of the LED chip. The comparator **574** produces an output voltage $\mathbf{V_{CTRL}}$ that is related to the difference between the voltages $\mathbf{V_{FR}}$ and $\mathbf{V_{VREFR}}$ and hence related to the difference between the actual and normal operating temperatures. The control voltage $\mathbf{V_{CTRL}}$ is used to control the controllable current source **570** and the forward drive current $\mathbf{i_{FR}}$ of the red LED chips **514**.

[0117] FIG. **5u** shows a drive circuit **586** in which the red LED chips **514** are driven from a constant current source **552** and the blue LED chips **512** are driven from a controllable current source **588** whose current is controllable in dependence on the forward drive voltage $\mathbf{V_{FB}}$ of the blue LED chips to compensate for changes in the LED chip operating temperature. The forward

drive voltage $\mathbf{V_{FB}}$ is compared with a reference voltage $\mathbf{V_{VREFB}}$ using a voltage comparator **590** or like device. Typically the reference voltage $\mathbf{V_{VREFB}}$ is selected to be representative of the forward drive voltage at the normal operating temperature of the LED chip. The comparator **590** produces an output voltage $\mathbf{V_{CTRL}}$ that is related to the difference between the voltages $\mathbf{V_{FB}}$ and V_{VREFB} and hence related to the difference between the actual and normal operating temperatures. The control voltage $\mathbf{V_{CTRL}}$ is used to control the controllable current source **588** and the forward drive current $\mathbf{i_{FB}}$ of the blue LED chips **512**.

[0118] FIG. **5v** shows a drive circuit **592** in which the red and blue LED chips **512**, **514** are driven by a respective controllable current source **570**, **588** whose current is controllable in dependence on the forward drive voltage $\mathbf{V_{FR}}$, $\mathbf{V_{FB}}$ of the red and blue LED chip(s) to compensate for changes in the LED chip operating temperature. The drive circuit **592** is a combination of drive circuits **584** (FIG. **5t**) and **586** (FIG. **5u**) and operates in a like manner.

[0119] FIG. **5w** shows a drive circuit **594** in which the blue LED chips **512** are driven from a constant current source **554** and the red LED chips **514** are driven from a controllable current source **570** whose current is controllable in dependence on a difference in forward drive voltage $\mathbf{V_{FB}}$-$\mathbf{V_{FR}}$ of the LED chip(s) **512**, **514** to compensate for changes in the LED chip operating temperature. The forward drive voltages of the red and blue LED chips $\mathbf{V_{FR}}$, $\mathbf{V_{FB}}$ are compared by a voltage comparator **596** or like device which produces an output voltage that is related to the difference between the forward drive voltages $\mathbf{V_{CTRL}}$=V_{FB}-V_{FR} and hence related to relative drop of emission intensity of the red LED chips compared with the emission intensity of the blue LED chips (i.e. change of ratio of emission intensity).

[0120] FIG. **5x** is a drive circuit **598** that is similar to the drive circuit **594** except that it is configured such that the forward drive voltages V_{FB} and V_{FR} used to control the current source are normalized such that they are equal at the normal operating temperature T_n of the device. A potential divider arrangement comprising resistors **R1 600** and **R2 602** is configured such that at the normal operating temperature T_n the normalized forward drive voltage for the blue LED chips $\mathbf{V_{FBN}}$ is equal to the forward drive voltage of the red LED chips $\mathbf{V_{FR}}$ and is given by the relation:

[0121] $$V_{FBN} = V_{FR} = V_{FB}\frac{R1}{R1 + R2} @T_n$$

[0122] Such a circuit arrangement ensures that the control voltage V_{CTRL}=V_{FBN}-V_{FR} is zero at the normal operating temperature T_n. FIG. **5y** is a schematic plot of the control voltage $\mathbf{V_{FBN}}$-$\mathbf{V_{FR}}$ versus LED operating temperature. The control voltage $\mathbf{V_{CTRL}}$ is used to control the controllable current source **570** and the forward drive current $\mathbf{i_{FR}}$ of the red LED chips to thereby maintain the relative contribution of light emission from the red and blue LED chips substantially constant

thereby reducing the variation in the CCT and/or CRI of light emitted by the device **500**.

[0123] In each of the drive circuits of FIGS. **5e** to **5g**, **5k** to **5r** and **5t** to **5x** the light emitting device **500** is indicated by a dashed line box and comprises at least one blue LED chip **512** and at least one red LED chip **514**. It is envisaged that the light emitting device of the invention incorporate part or all of the drive circuitry described. Moreover it will be appreciated that the foregoing drive circuits are exemplary only and that other circuit configurations embodying the invention will be apparent to those skilled in the art.

[0124] The light emitting devices and drive circuits of the invention are exemplary only and are not restricted to the specific embodiments described and variations can be made that are within the scope of the invention. For example, devices in accordance with the invention can comprise other LEDs such as silicon carbide (SiC), zinc selenide (ZnSe), indium gallium nitride (InGaN), aluminum nitride (AlN) or aluminum gallium nitride (AlGaN) based LED chips that emit blue or U.V. light.

[0125] As an alternative to incorporating the phosphor material in the lens it is also envisaged to provide the phosphor material in the form of one or more layers on a surface of the lens, typically the planar face. In such an arrangement the phosphor material, which is typically in powder form, is mixed with a binder material such as NAZDAR's clear screen ink 9700 and the mixture screen printed on the surface of the lens to form a layer of uniform thickness. It will be appreciated that the phosphor can be applied by other deposition methods such as spraying, ink jet printing or by mixing the powdered phosphor with a light transmissive binder material such as an epoxy or silicone and applying the phosphor/polymer mixture by doctor blading, spin coating etc. To protect the phosphor material the lens is preferably mounted with the phosphor layer(s) facing the recess. Typically the weight loading of phosphor material to light transmissive binder in the deposited material is between 10% and 30% though it can range between 1% and 99% depending on the desired emission product and the package design. To deposit a sufficient density of phosphor material per unit area, for example 0.02-0.04g/cm^2, it may be necessary to make multiple print passes, the number of passes depending on the mesh size of the printing screen.

CLAIMS

What is claimed is:

1. A white light emitting device comprising:

at least one blue solid state light emitter operable to generate blue light with a dominant wavelength in a range 400nm to 480nm;

at least one phosphor material operable to absorb a portion of the blue light and to emit light with a dominant wavelength in a range 490nm to 590nm; and

at least one red solid state light emitter operable to generate red light with a dominant wavelength in a range 600nm to700nm;

wherein the emission product of the device comprises the combined light generated by the blue and red light emitters and light generated by the at least one phosphor material and appears white in color; and

a drive circuit operable to compensate for variation in the ratio of red to blue light in the emission product such that over an operating temperature range of at least 25°C said variation is less than 20%.

2. The device of Claim 1, wherein the drive circuit is configured such that in operation over the operating temperature range said variation is selected from the group consisting of being: less than 10%, less than 5% and less than 1%.

3. The device of Claim 1, wherein the drive circuit is configured for operation over an operating temperature range selected from the group consisting of being: at least 25°C, at least 50°C and at least 100°C.

4. The device of Claim 1, and configured such that the emission product has a color rendering index selected from the group consisting of being: at least 80, at least 85, at least 90 and at least 95.

5. The device of Claim 1, wherein the drive circuit is operable to control the power of at least one of the red and blue light emitters in response to a parameter related to the operating temperature of at least one of the blue and red light emitters.

6. The device of Claim 5, wherein the parameter comprises a temperature of at least one of the blue and red light emitters.

7. The device of Claim 6, and further comprising a sensor for sensing the temperature of the red and/or blue light emitters.

8. The device of Claim 7, wherein the blue and red light emitters are mounted in thermal communication with a thermally conductive substrate and wherein the sensor is configured to sense the temperature of the substrate.

9. The device of Claim 6, and comprising respective sensors for sensing the temperature of the blue and red light emitters.

10. The device of Claim 7, wherein the sensor comprises a temperature dependent resistor.

11. The device of Claim 7, wherein at least one of the blue and red light emitters is connected in series with the temperature dependent resistor and said light emitter is operable from a constant voltage source.

12. The device of Claim 11, wherein the temperature dependent resistor has a negative temperature coefficient and is connected in series with the at least one red light emitter.

13. The device of Claim 11, wherein the temperature dependent resistor has a positive temperature coefficient and is connected in series with the at least one blue light emitter.

14. The device of Claim 11 wherein the blue and red light emitter are connected in series with a respective temperature dependent resistor.

15. The device of Claim 7, wherein at least one of the blue and red emitters is connected in parallel with the temperature dependent resistor and said light emitter is operable from a constant current source.

16. The device of Claim 15, wherein the temperature dependent resistor has a positive temperature coefficient and is connected in parallel with the at least one red light emitter.

17. The device of Claim 15, wherein the temperature dependent resistor has a negative temperature coefficient and is connected in parallel with the at least one blue light emitter.

18. The device of Claim 15 wherein the blue and red light emitter are connected in parallel with a respective temperature dependent resistor.

19. The device of Claim 10, wherein the blue and red light emitters are connected in parallel and driven from a constant current source and wherein the temperature dependent resistor has a negative temperature coefficient and is connected in series with the at least one red light emitter and configured such that in operation the drive current of the at least one red light emitter increases relative to the drive current of the at least one blue light emitter with increasing temperature.

20. The device of Claim 10, wherein the blue and red light emitters are connected in parallel and driven from a constant current source and wherein the temperature dependent resistor has a positive temperature coefficient and is connected in series with the at least one blue light emitter and configured such that in operation the drive current of the at least one blue light emitter decreases relative to the drive current of the at least one red light emitter with increasing temperature.

21. The device of Claim 10, wherein the blue and red light emitters are connected in parallel and driven from a constant current source and comprising a respective temperature dependent resistor connected in series with the blue and red light emitters.

22. The device of Claim 6, wherein the drive circuit is operable to control the drive current of one or both light emitters in dependence on a difference between a measured temperature and a reference temperature.

23. The device of Claim 22, wherein the drive circuit comprises a comparator operable to compare the measured and reference temperatures.

24. The device of Claim 1, wherein the parameter comprises the forward drive voltage of at least one of the blue and red light emitters.

25. The device of Claim 24, wherein the drive circuit is operable to control the drive current of one or both light emitters in dependence on a difference between a drive voltage and a reference voltage.

26. The device of Claim 25, wherein the drive circuit comprises a comparator operable to compare the measured and reference voltages.

27. The device of Claim 24, wherein the drive circuit is operable to control the drive current in dependence on a difference of forward drive voltages of the blue and red light emitters.

28. The device of Claim 1, wherein the at least one phosphor material is physically separated from the at least one blue LED by a distance of at least 5mm.

29. A white light emitting device comprising:

at least one blue LED operable to generate blue light;

at least one phosphor material operable to absorb a portion of the blue light and to emit green/yellow light; and

at least one red LED operable to generate red light;

wherein the emission product of the device comprises the combined light generated by the blue and red light LEDs and green/yellow light generated by the at least one phosphor material and appears white in color; and

a drive circuit operable to compensate for variation in the ratio of red to blue light in the emission product such that over an operating temperature range of at least 25°C said variation is less than 20%.

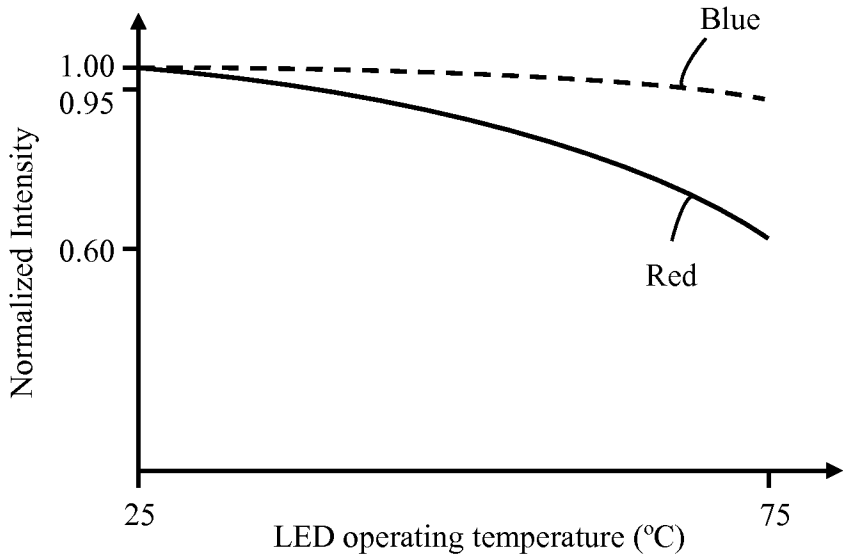
Blue
1.00
0.95
Normalized Intensity
0.60
Red
25
75
LED operating temperature (ºC)

FIG. 1a

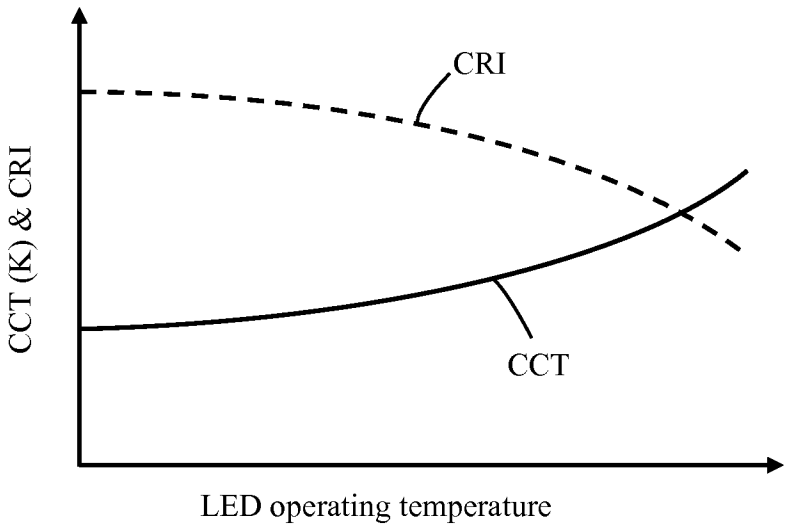
CRI
CCT (K) & CRI
CCT
LED operating temperature

FIG. 1b

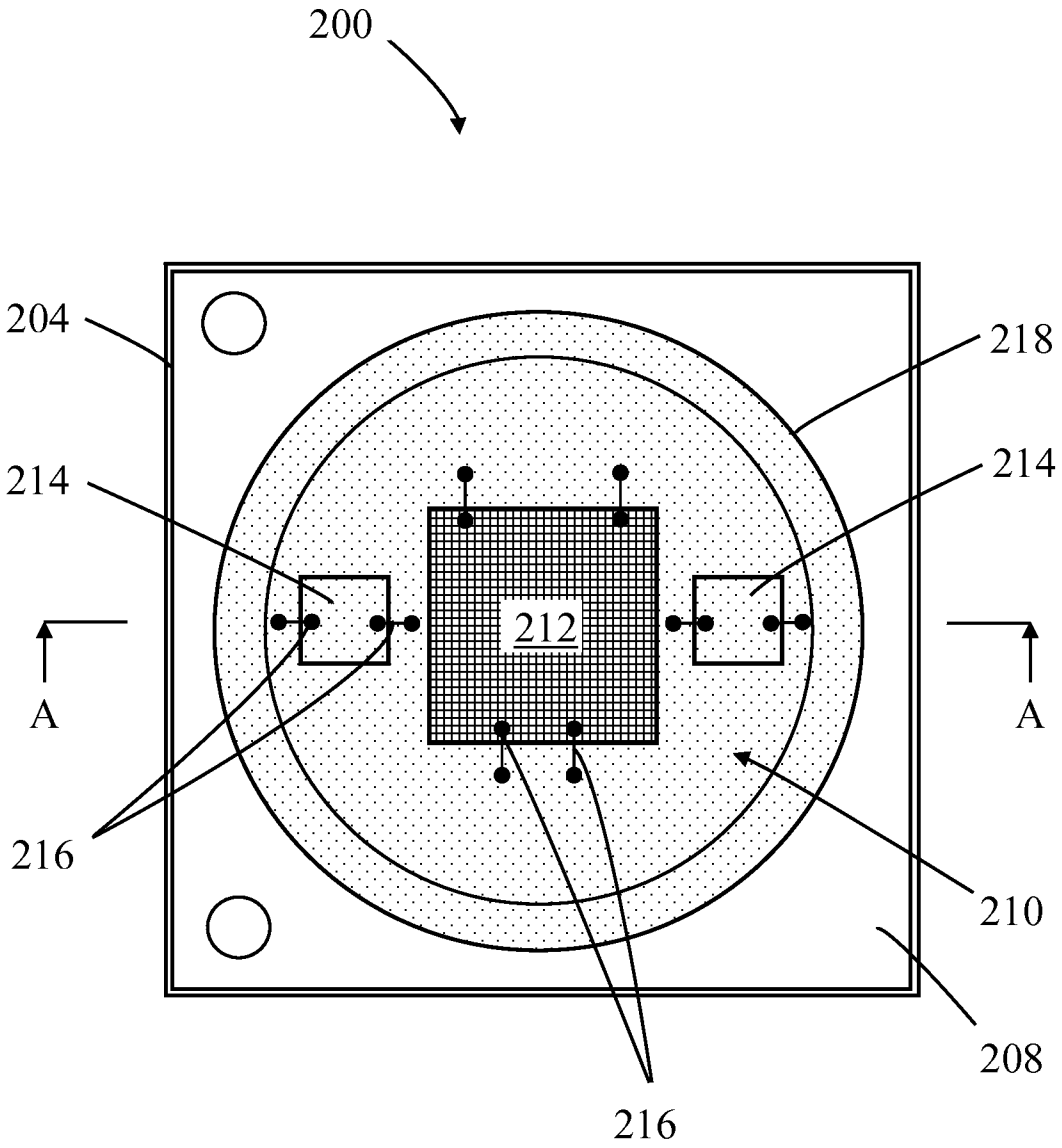

FIG. 2a

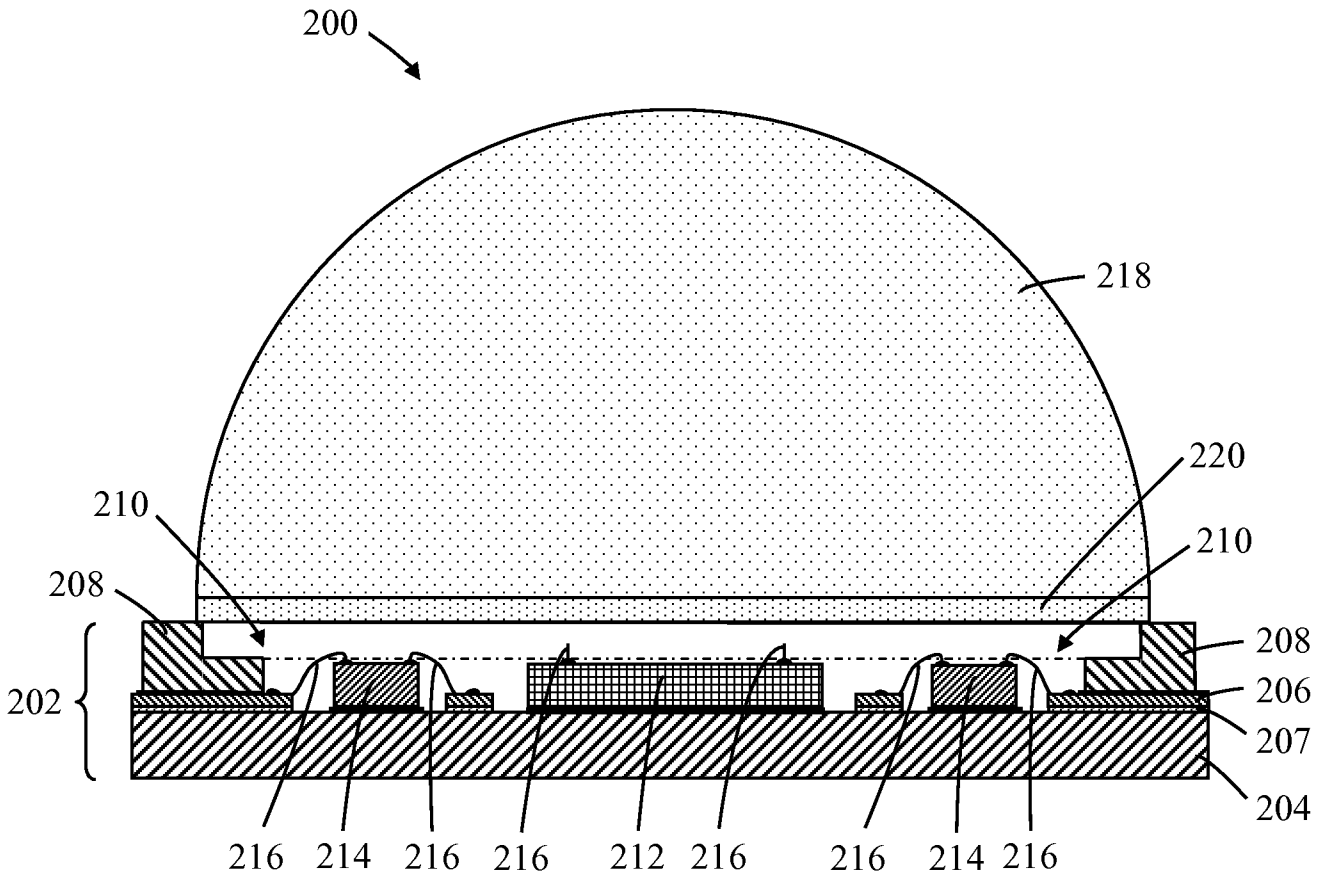
200
218
220
210
210
208
208
202
206
207
204
216
214
216
216
212
216
216
214
216

FIG. 2b

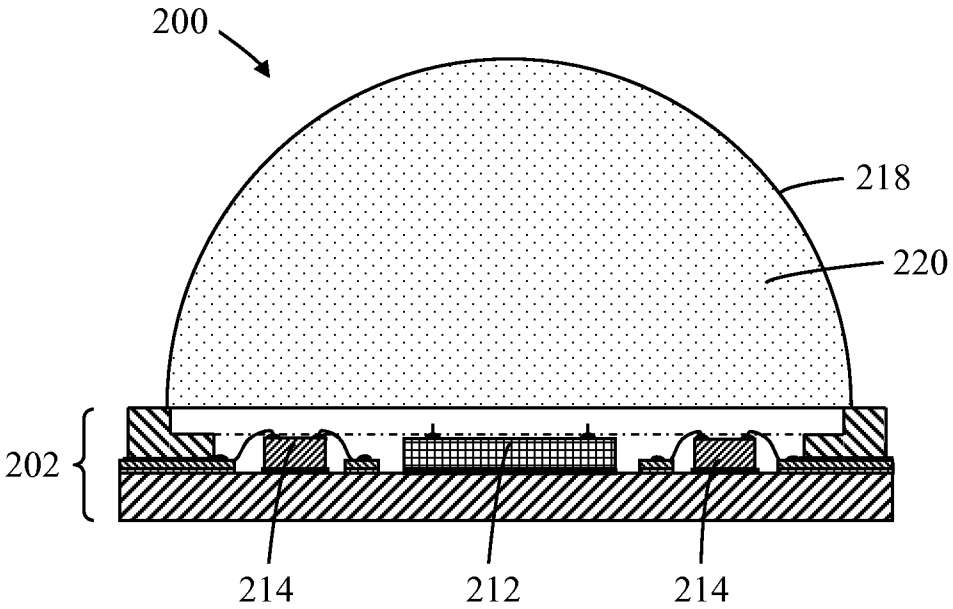

FIG. 2c

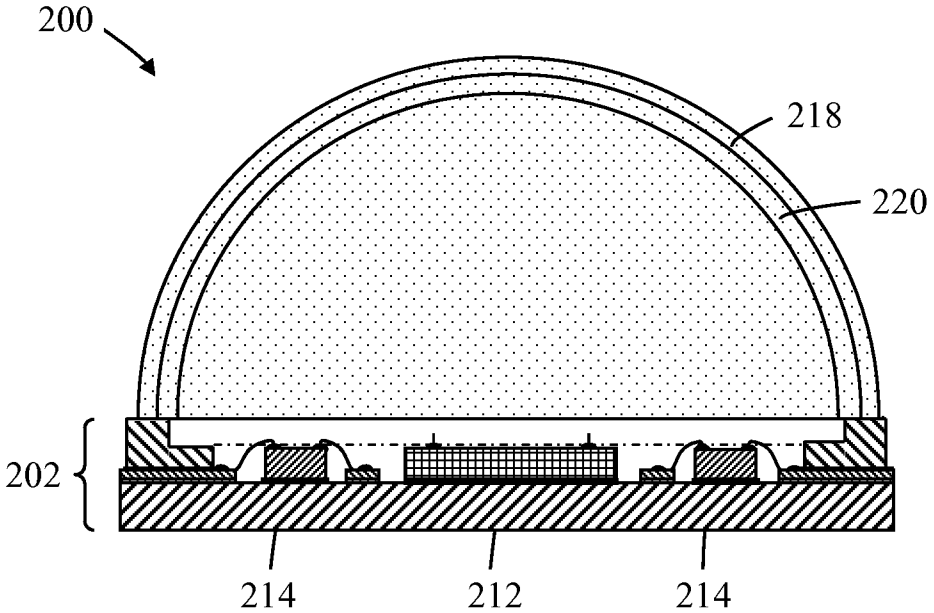

FIG. 2d

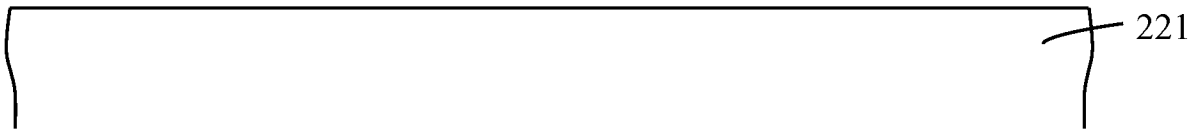

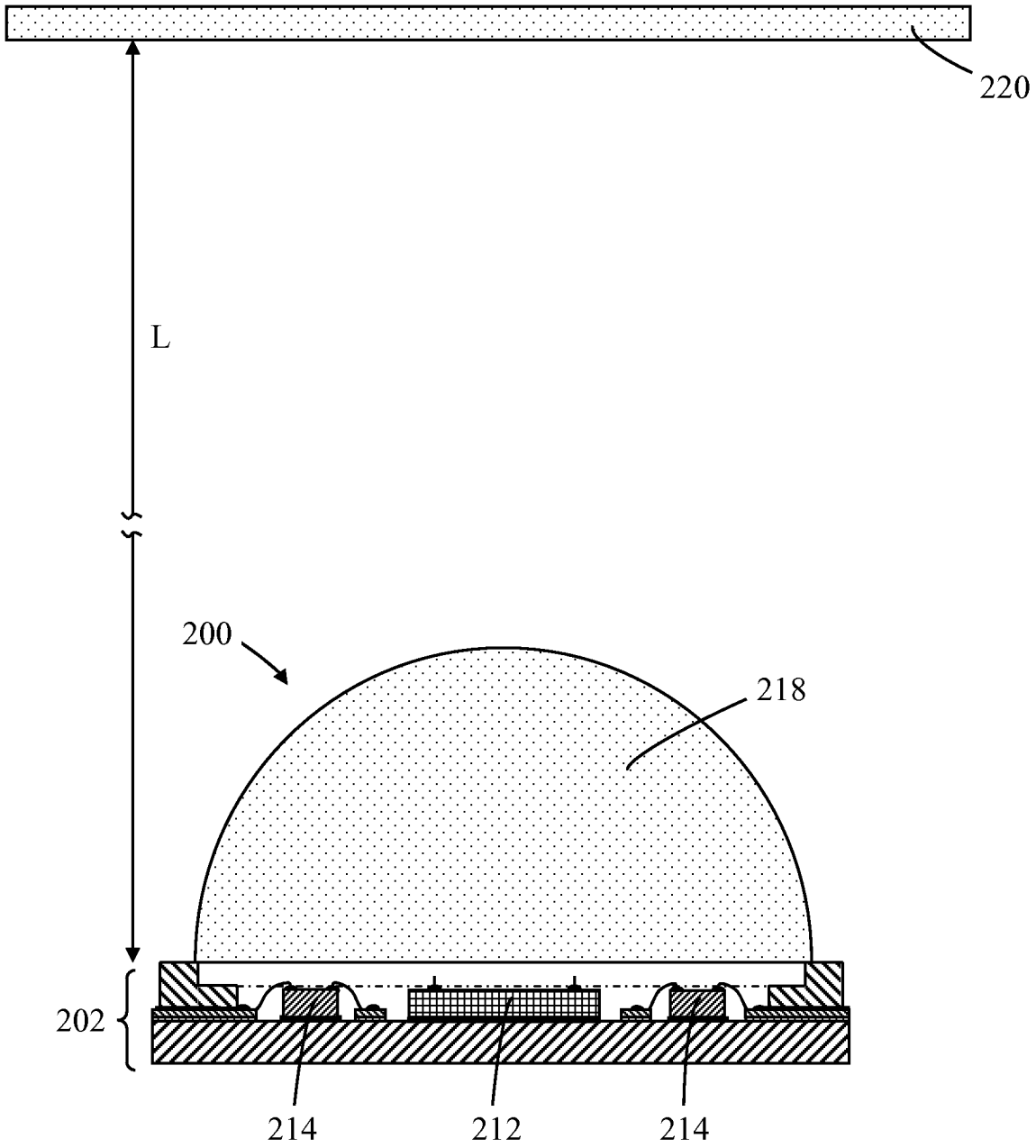

FIG. 2e

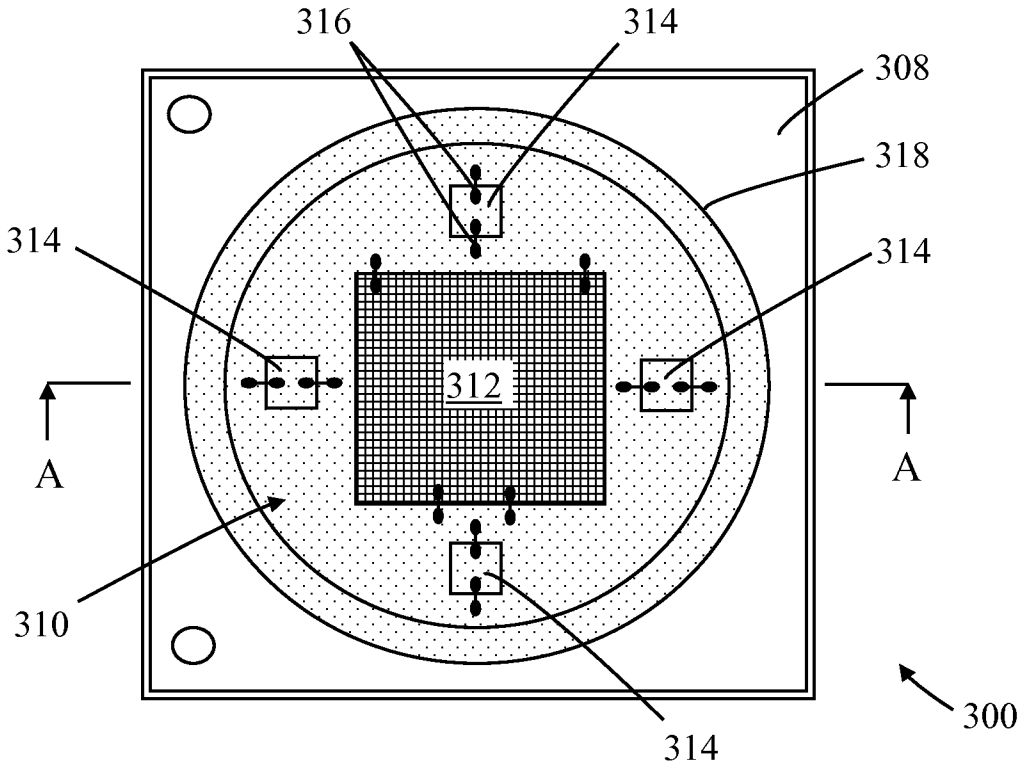

FIG. 3a

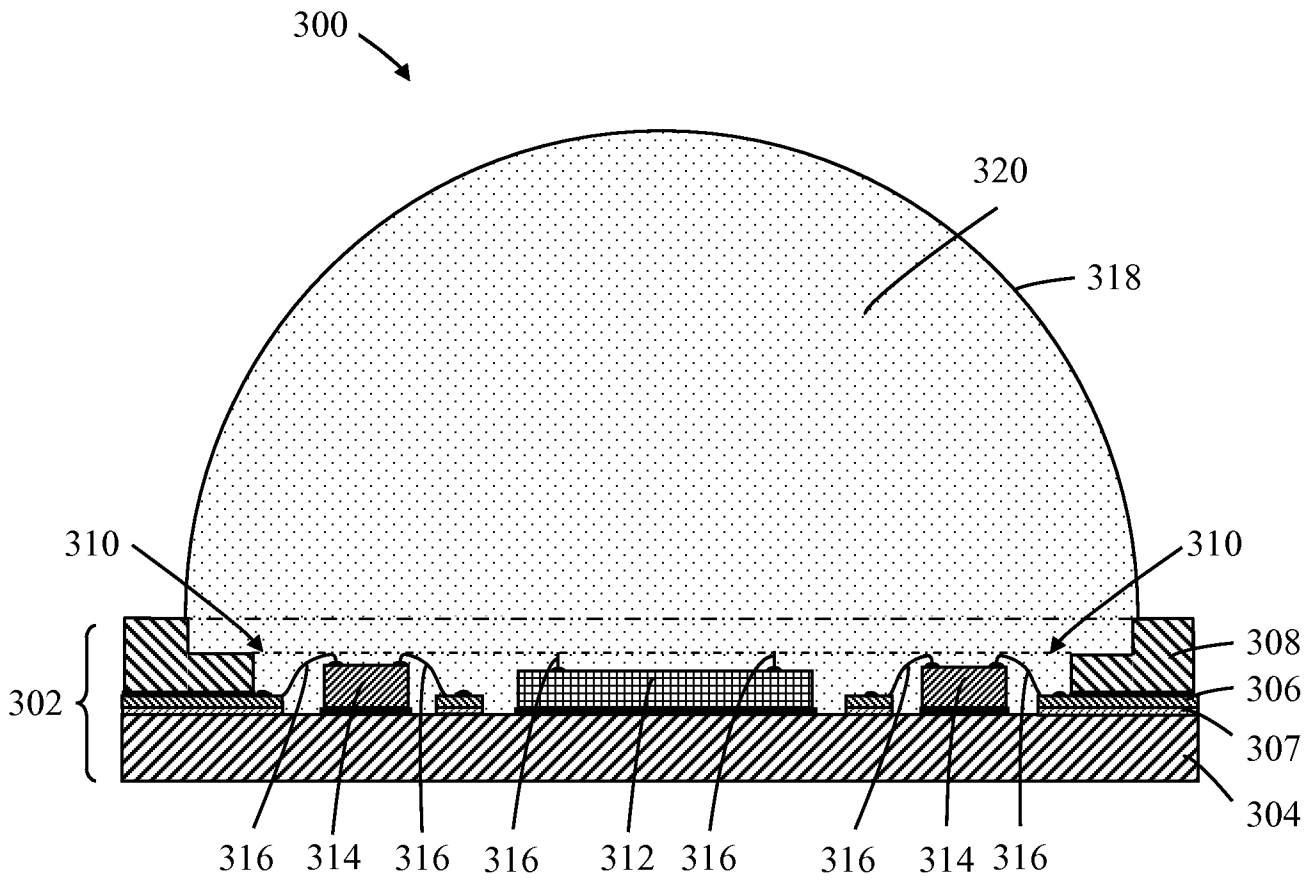
300
320
318
310
310
308
306
302
307
304
316
314
316
316
312
316
316
314
316

FIG. 3b

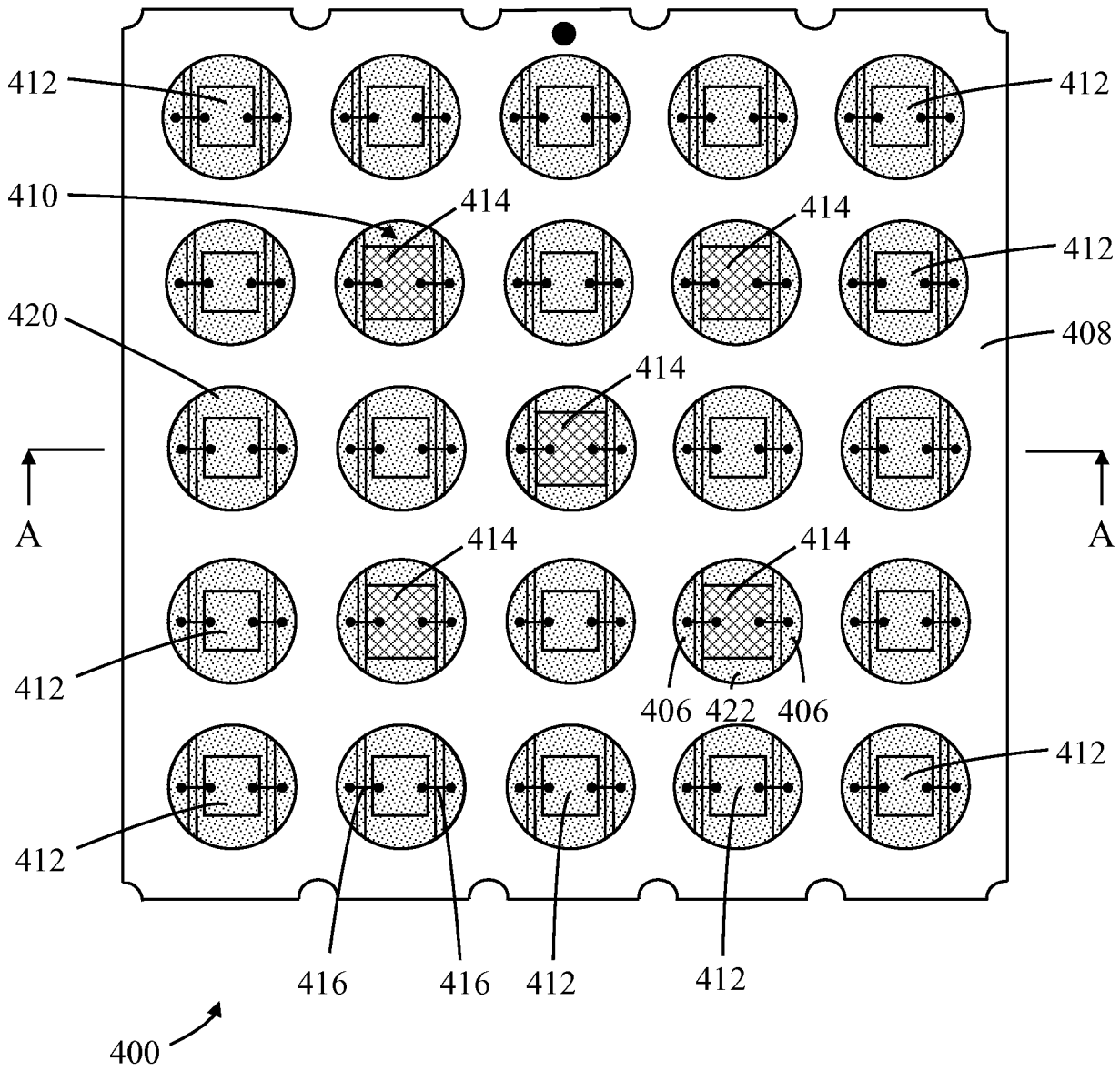
412
412
410
414
414
412
420
408
414
A
A
414
414
412
406
422
406
412
412
416
416
412
412
400

FIG. 4a

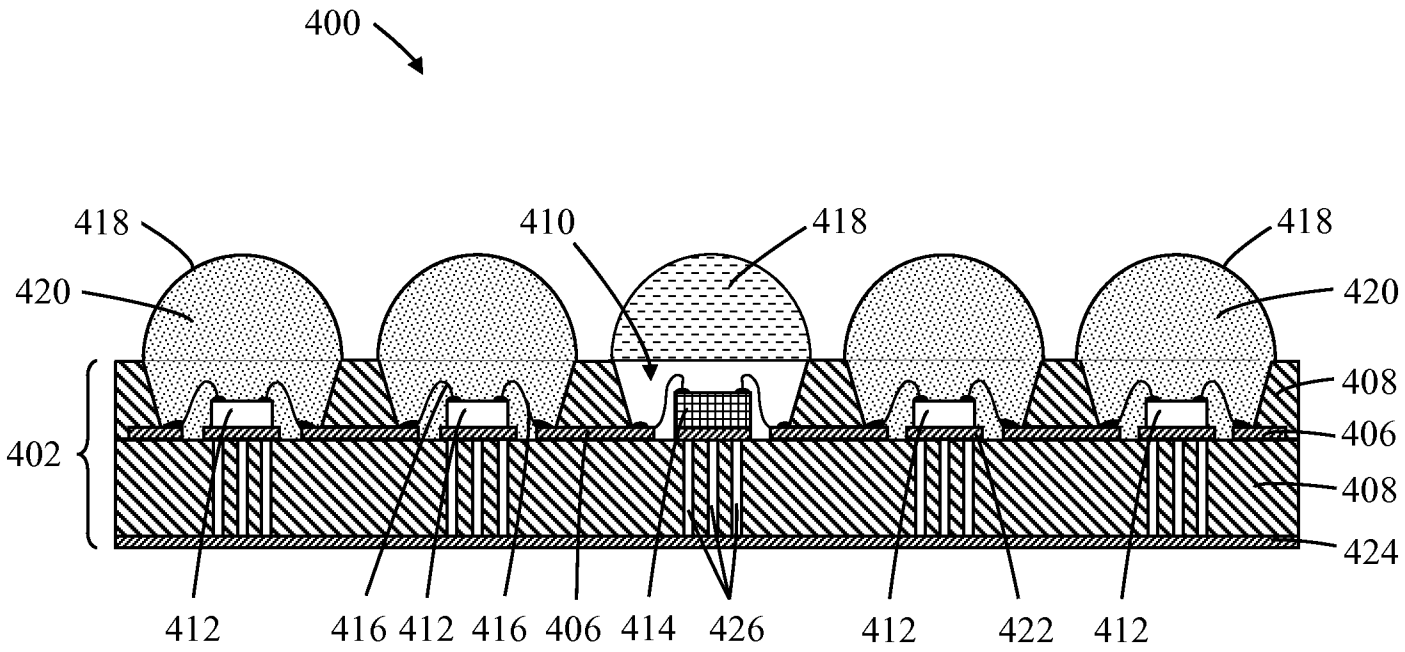
400
418
410
418
418
420
420
408
406
402
408
424
412
416
412
416
406
414
426
412
422
412

FIG. 4b

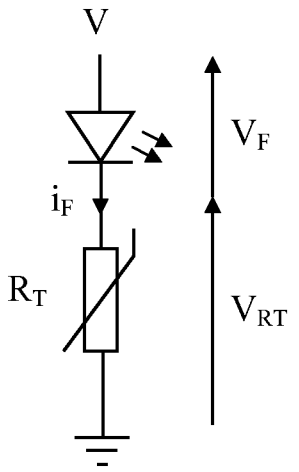
V
V_F
i_F
R_T
V_{RT}

FIG. 5a

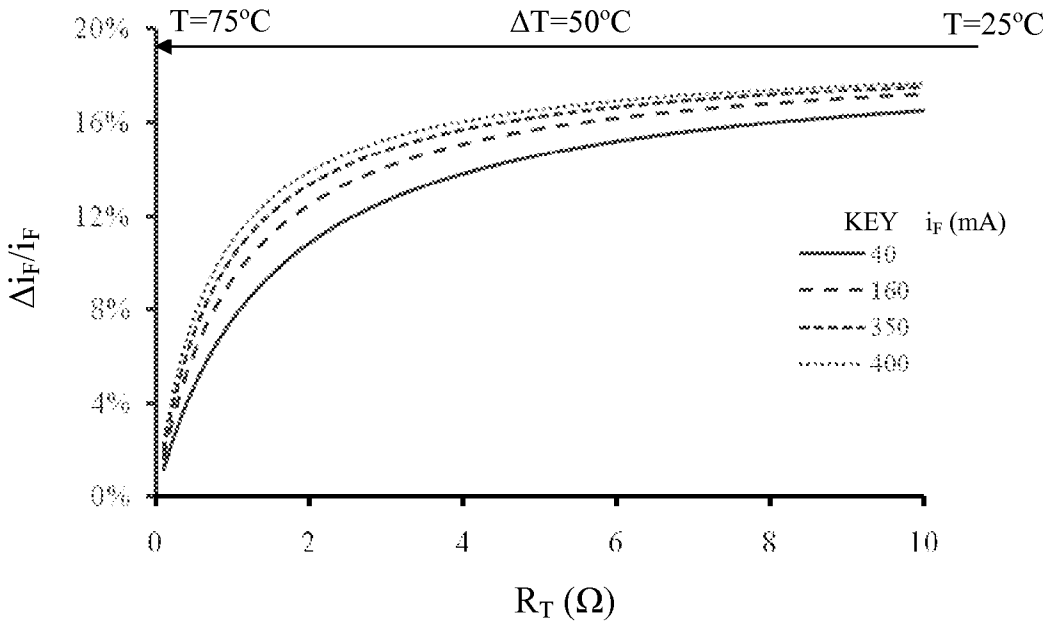
T=75°C
ΔT=50°C
T=25°C
20%
16%
12%
8%
4%
0%
$\Delta i_F/i_F$
0
2
4
6
8
10
R_T (Ω)
KEY i_F (mA)
40
160
350
400

FIG. 5b

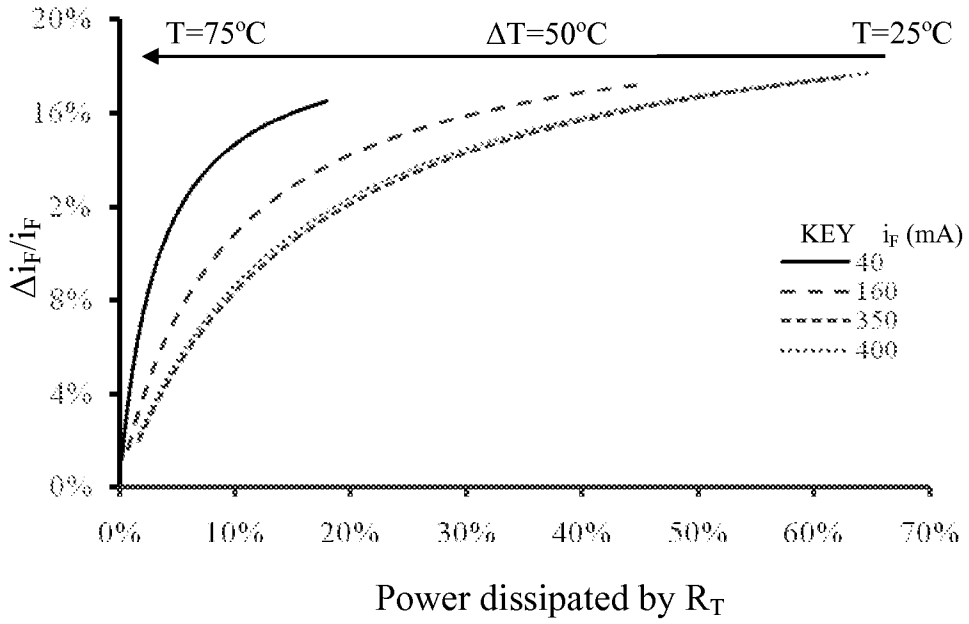
T=75ºC
ΔT=50ºC
T=25ºC
20%
16%
12%
8%
4%
0%
ΔiF/iF
KEY iF (mA)
40
160
350
400
0%
10%
20%
30%
40%
50%
60%
70%
Power dissipated by RT

FIG. 5c

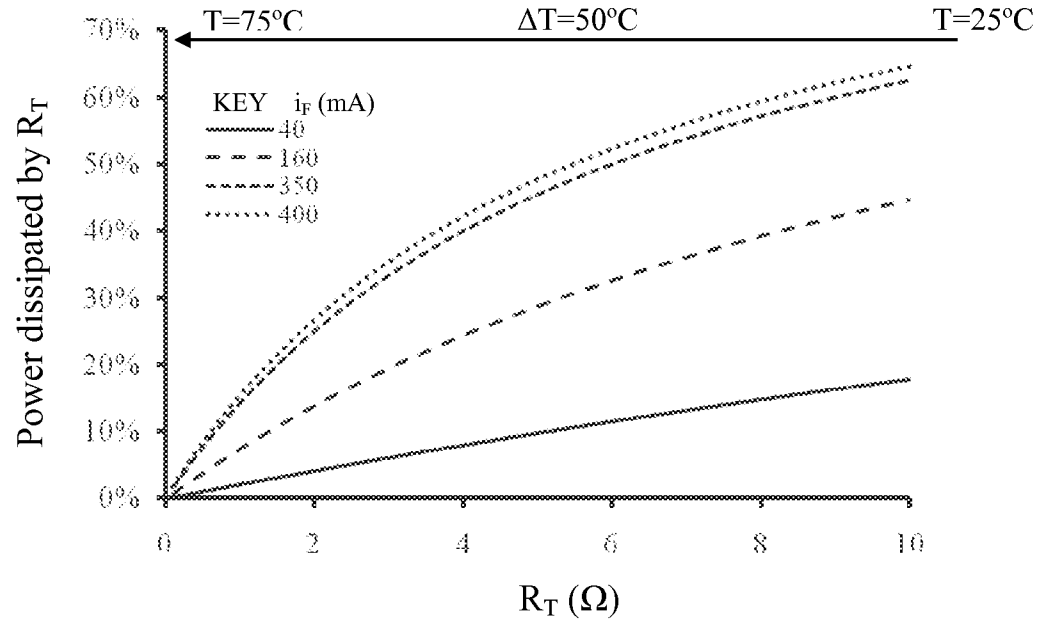
T=75ºC
ΔT=50ºC
T=25ºC
70%
60%
50%
40%
30%
20%
10%
0%
Power dissipated by RT
KEY iF (mA)
40
160
350
400
0
2
4
6
8
10
RT (Ω)

FIG. 5d

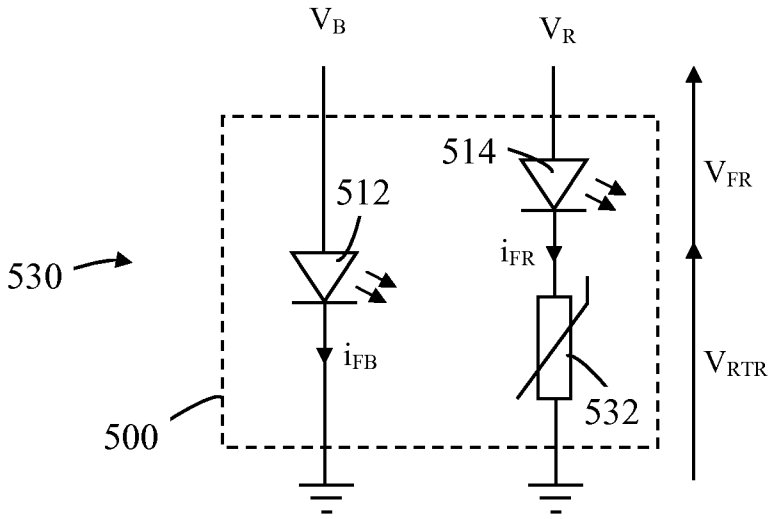
V_B
V_R
514
512
V_{FR}
530
i_{FR}
i_{FB}
V_{RTR}
532
500

FIG. 5e

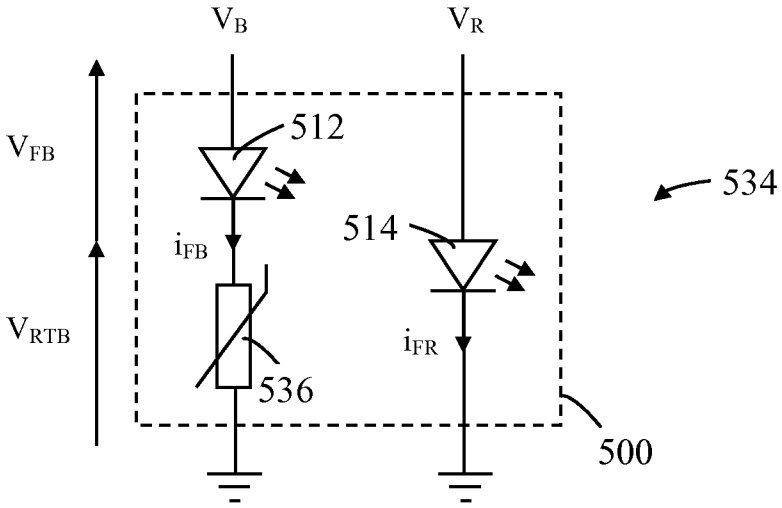
V_B
V_R
512
V_{FB}
534
514
i_{FB}
V_{RTB}
i_{FR}
536
500

FIG. 5f

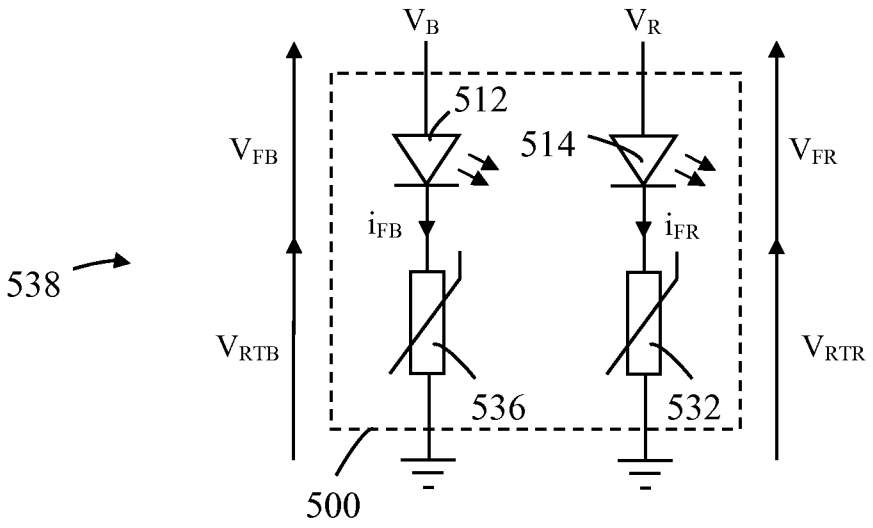
V_B
V_R
512
514
V_{FB}
V_{FR}
i_{FB}
i_{FR}
538
V_{RTB}
V_{RTR}
536
532
500

FIG. 5g

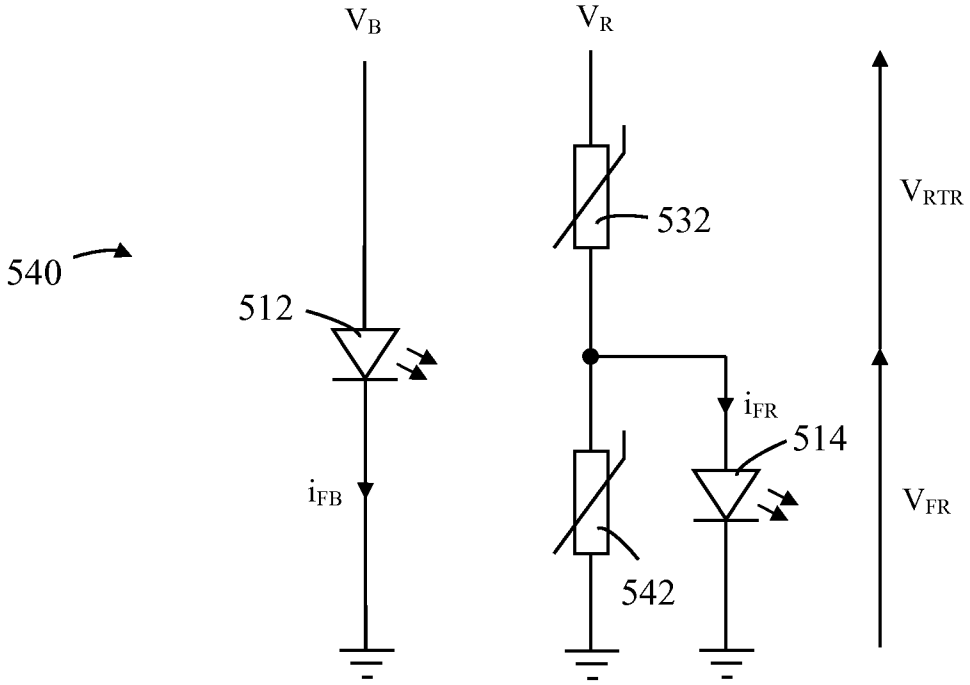
V_B
V_R
V_{RTR}
532
540
512
i_{FR}
514
i_{FB}
V_{FR}
542

FIG. 5h

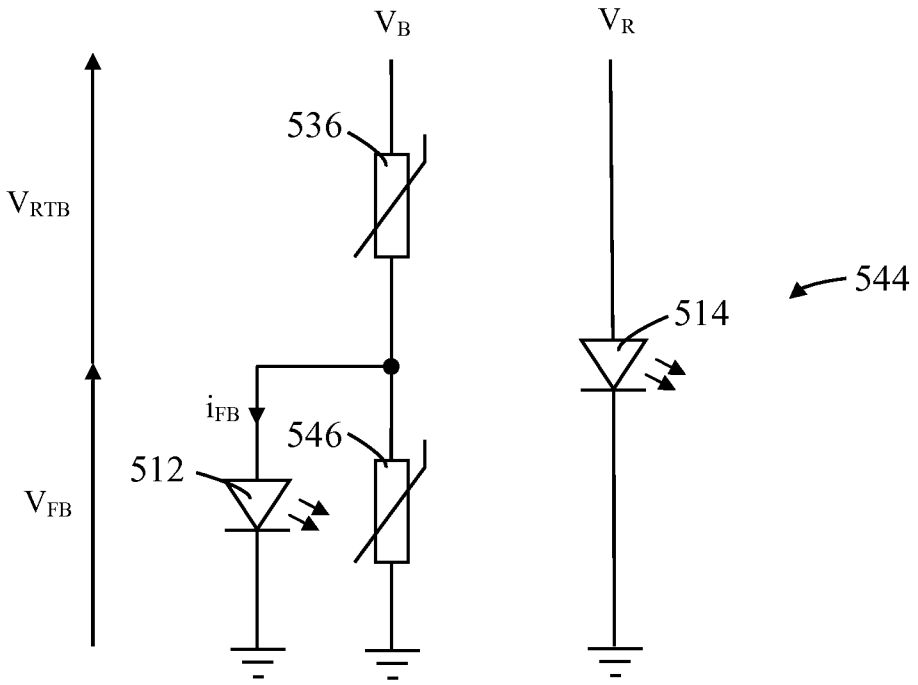
V_B
V_R
536
V_{RTB}
544
514
i_{FB}
546
512
V_{FB}

FIG. 5i

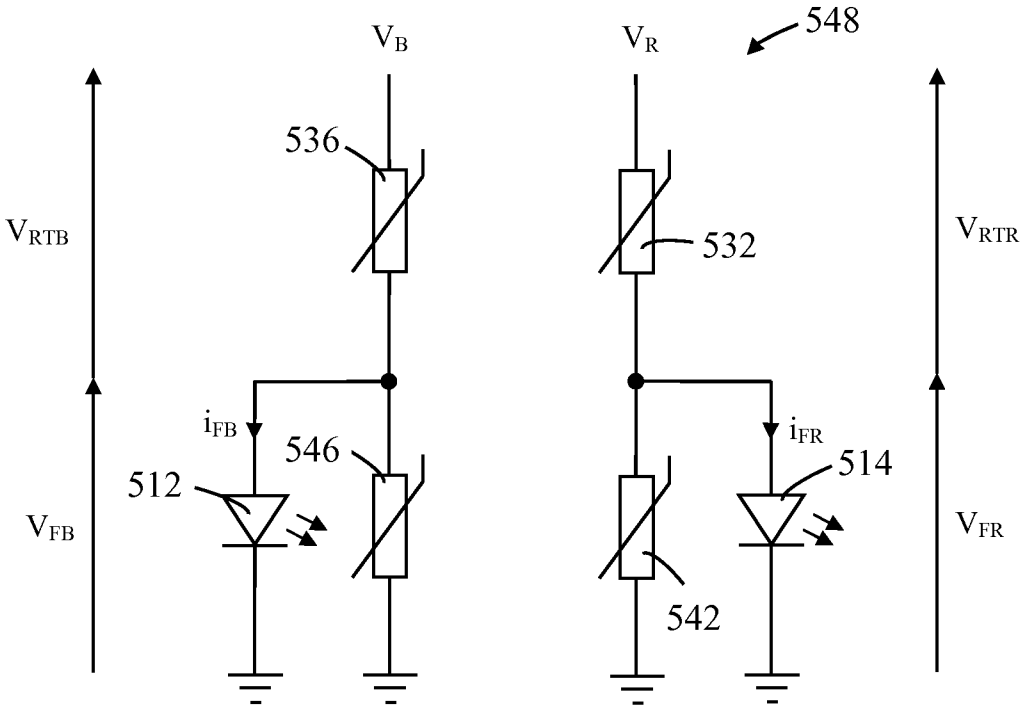
V_B
V_R
548
536
V_{RTB}
532
V_{RTR}
i_{FB}
546
i_{FR}
514
512
V_{FB}
V_{FR}
542

FIG. 5j

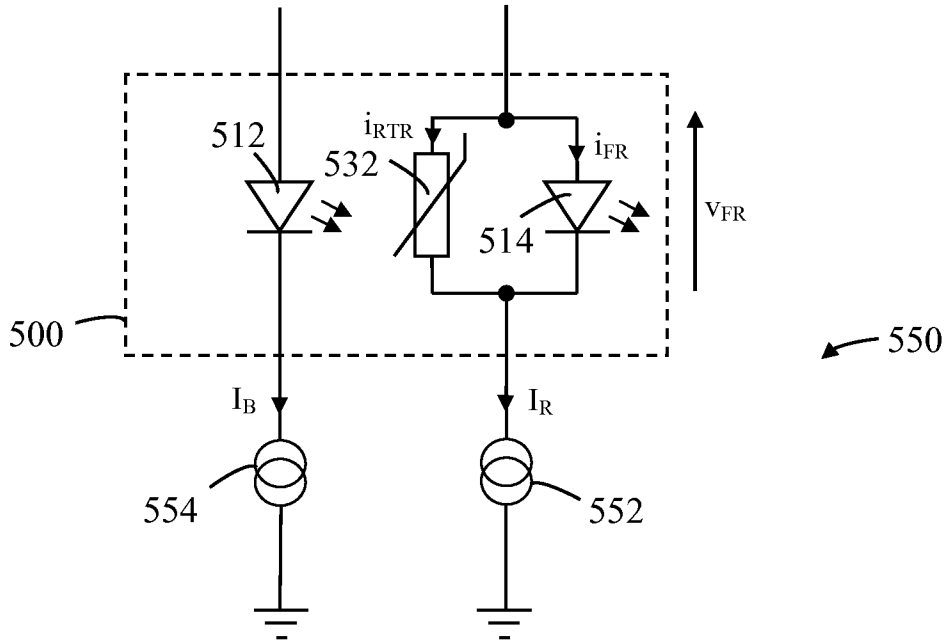
512
i_{RTR}
532
i_{FR}
514
v_{FR}
500
550
I_B
I_R
554
552

FIG. 5k

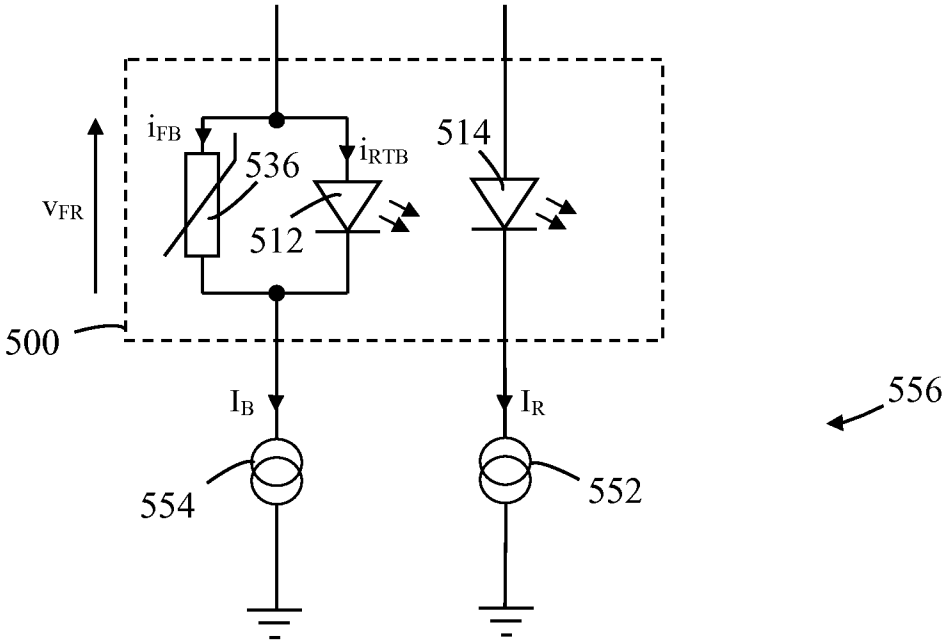
i_{FB}
536
i_{RTB}
514
v_{FR}
512
500
556
I_B
I_R
554
552

FIG. 5l

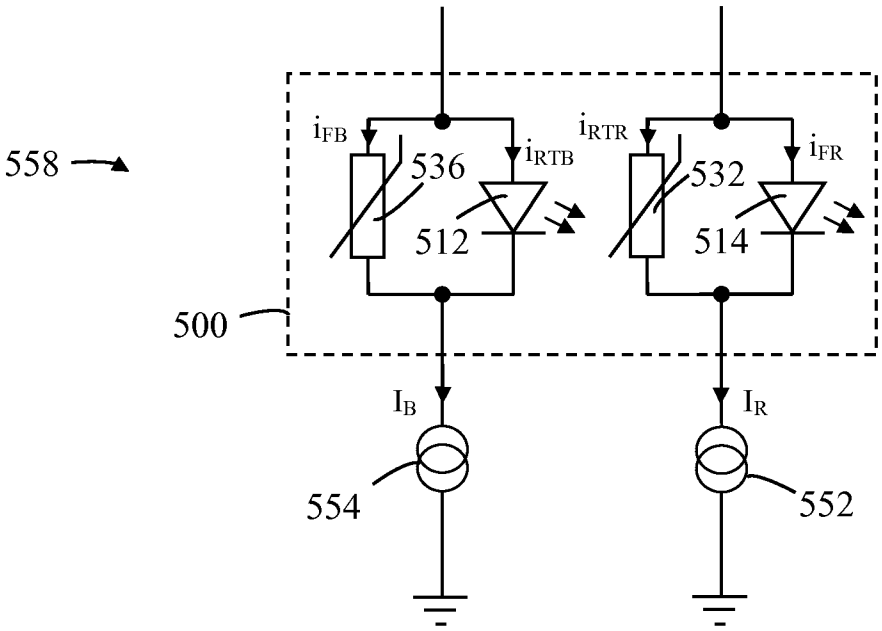
558
iFB
536
iRTB
512
iRTR
532
iFR
514
500
IB
IR
554
552

FIG. 5m

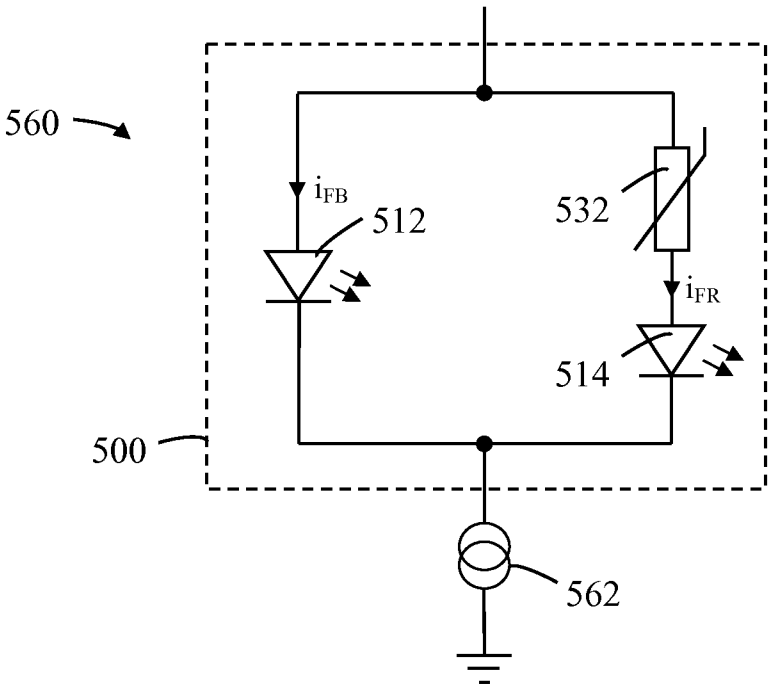
560
iFB
512
532
iFR
514
500
562

FIG. 5n

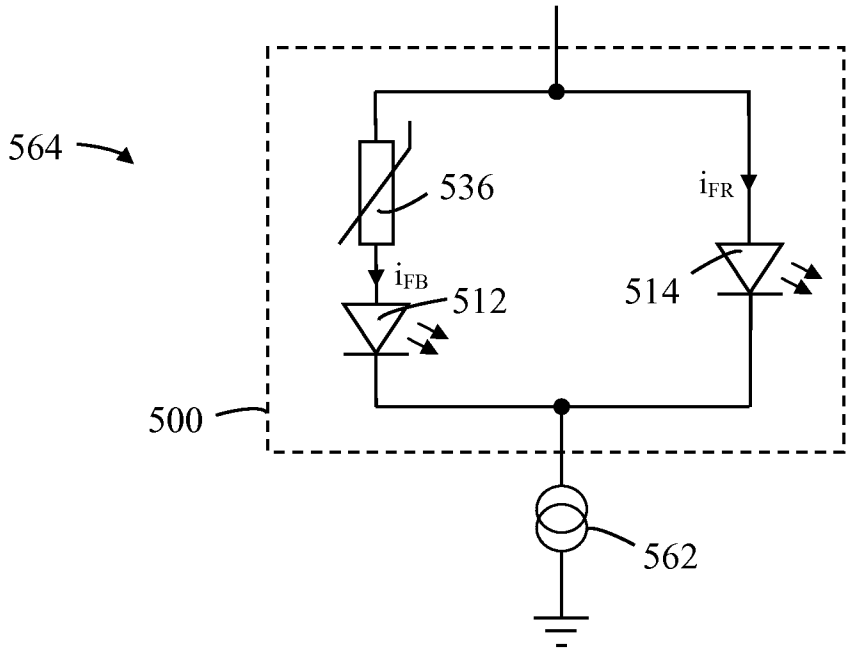
564
536
i_{FR}
i_{FB}
512
514
500
562

FIG. 5o

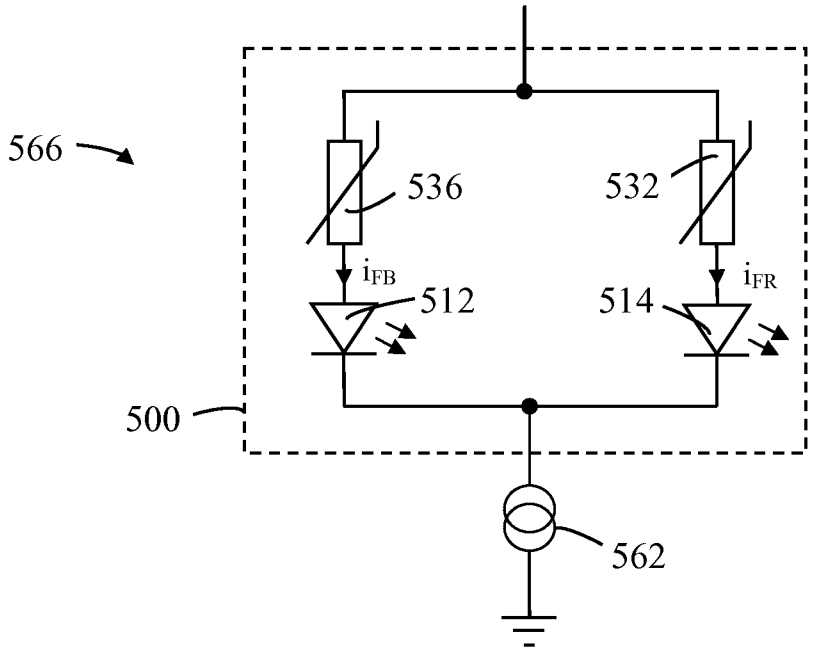
566
536
532
i_{FB}
i_{FR}
512
514
500
562

FIG. 5p

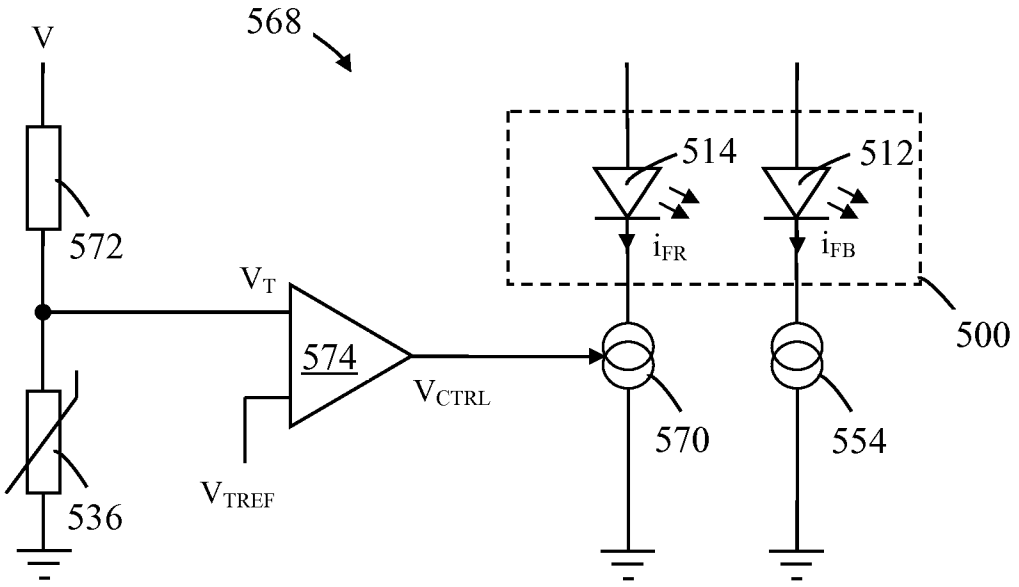
568
V
572
V_T
574
V_{CTRL}
V_{TREF}
536
514
512
i_{FR}
i_{FB}
500
570
554

FIG. 5q

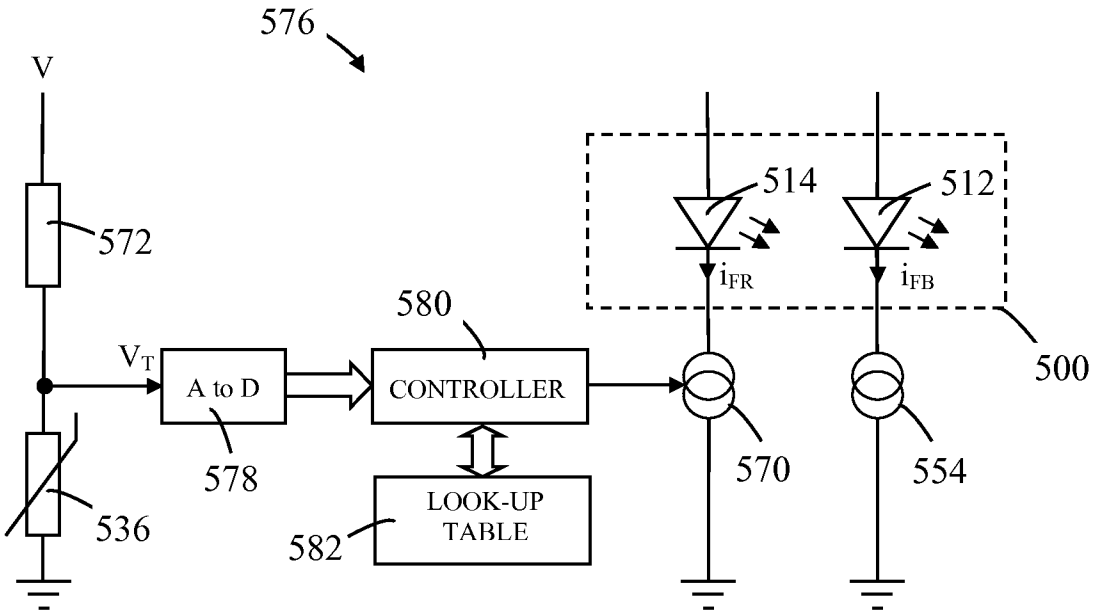
576
V
572
V_T
A to D
578
580
CONTROLLER
LOOK-UP TABLE
582
536
514
512
i_{FR}
i_{FB}
500
570
554

FIG. 5r

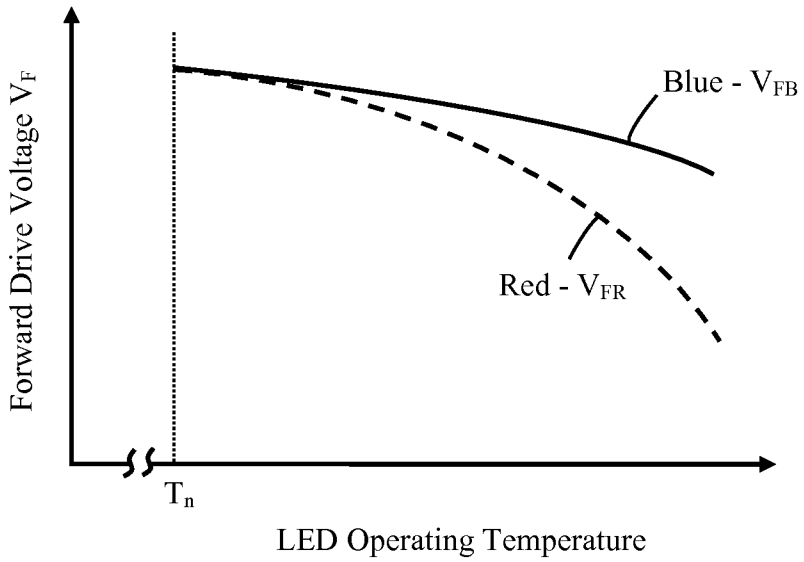
Forward Drive Voltage V_F
Blue - V_{FB}
Red - V_{FR}
T_n
LED Operating Temperature

FIG. 5s

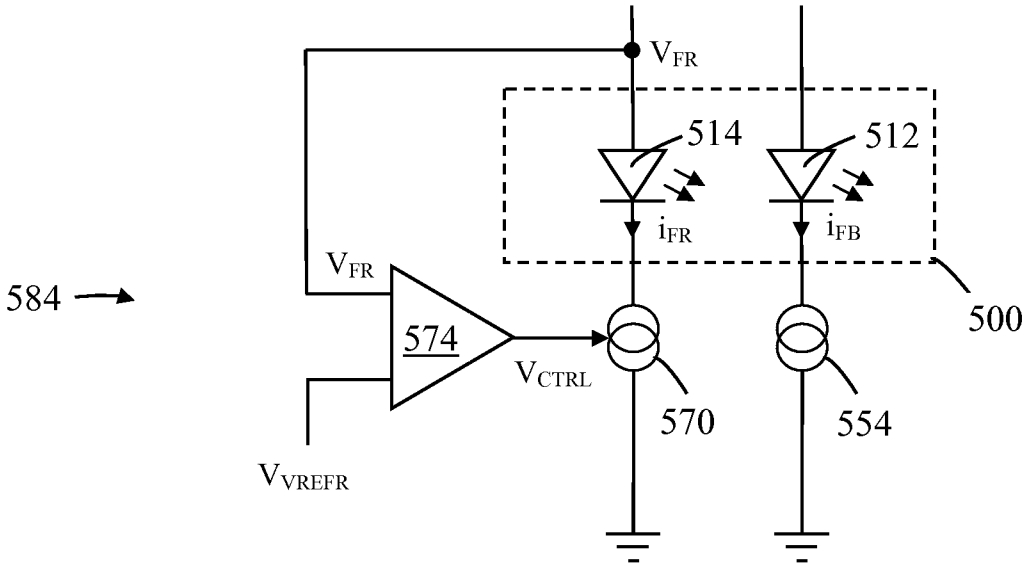
V_{FR}
514
512
i_{FR}
i_{FB}
584
V_{FR}
574
V_{CTRL}
500
570
554
V_{VREFR}

FIG. 5t

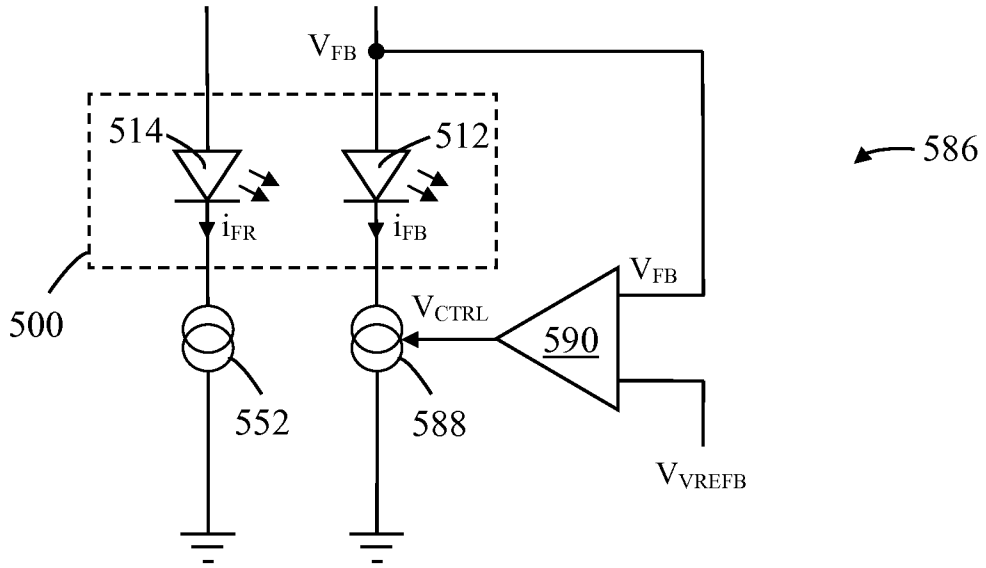
V_{FB}
514
512
586
i_{FR}
i_{FB}
V_{FB}
500
V_{CTRL}
590
552
588
V_{VREFB}

FIG. 5u

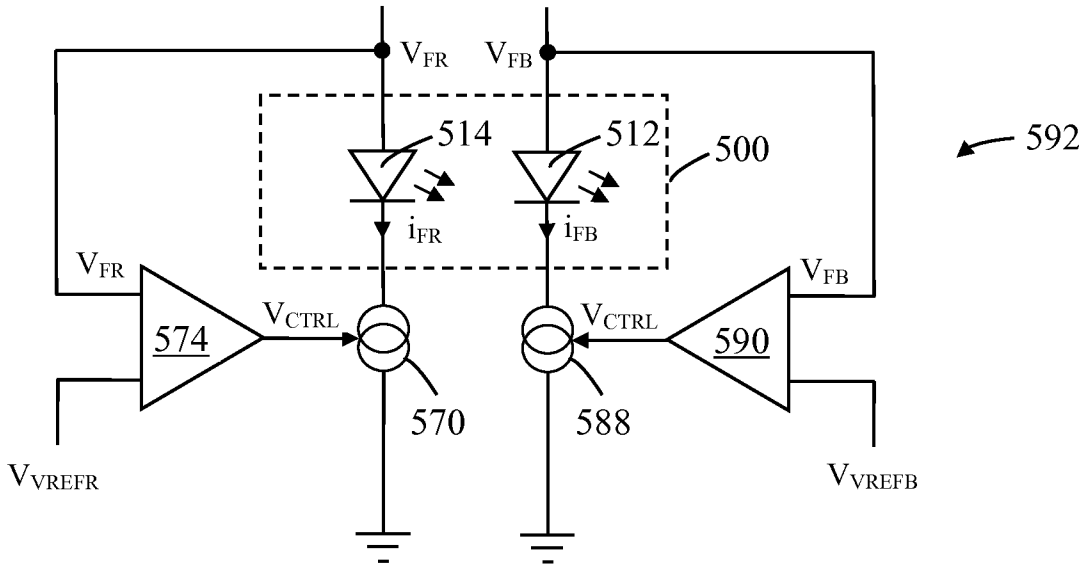
V_{FR}
V_{FB}
514
512
500
592
i_{FR}
i_{FB}
V_{FR}
V_{FB}
V_{CTRL}
V_{CTRL}
574
590
570
588
V_{VREFR}
V_{VREFB}

FIG. 5v

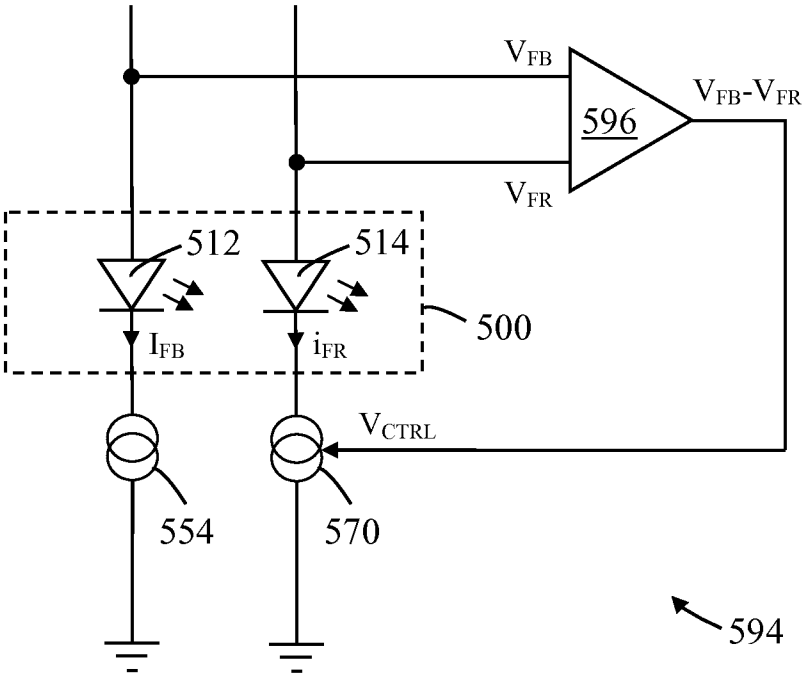

FIG. 5w

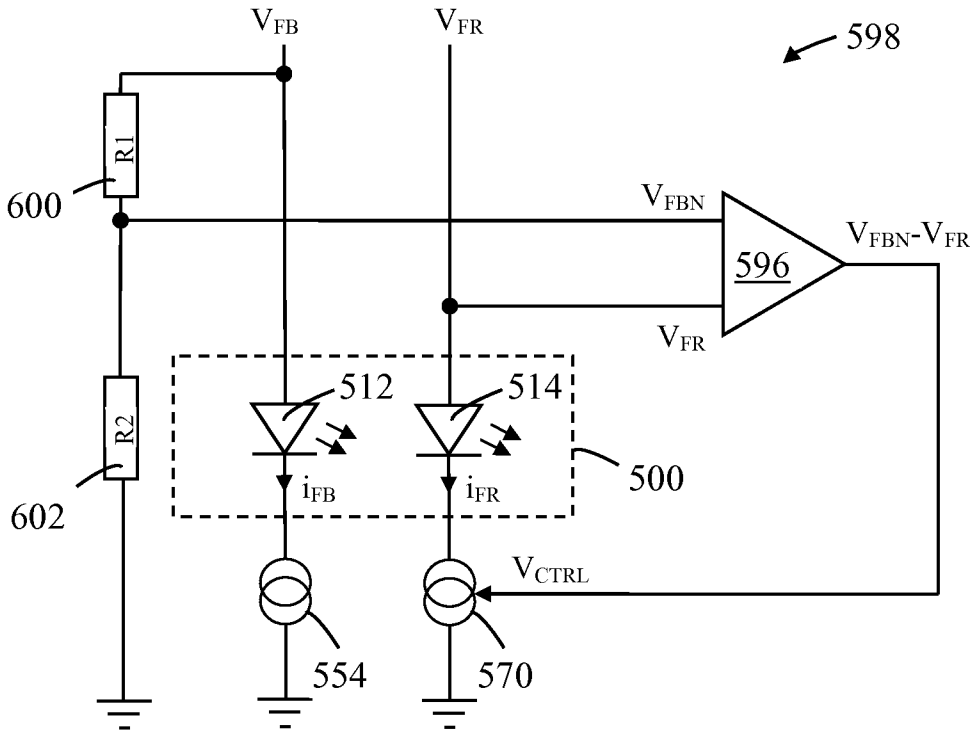
V_{FB}
V_{FR}
598
R1
600
V_{FBN}
V_{FBN}-V_{FR}
596
V_{FR}
512
514
R2
500
i_{FB}
i_{FR}
602
V_{CTRL}
554
570

FIG. 5x

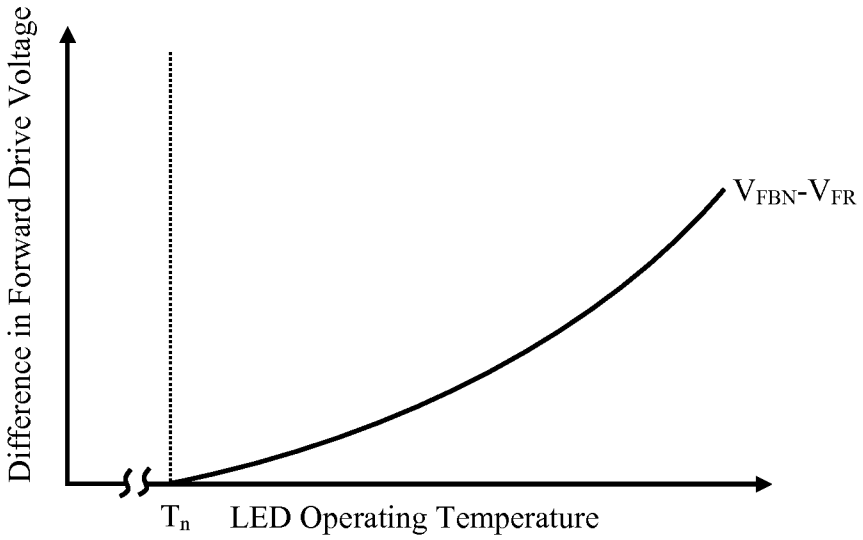
Difference in Forward Drive Voltage
V_{FBN}-V_{FR}
T_n
LED Operating Temperature

FIG. 5y

INTERNATIONAL SEARCH REPORT

International application No.
PCT/US 10/56893

A. CLASSIFICATION OF SUBJECT MATTER
IPC(8) - H01L 33/00 (2010.01)
USPC - 257/98; 313/502
According to International Patent Classification (IPC) or to both national classification and IPC

B. FIELDS SEARCHED

Minimum documentation searched (classification system followed by classification symbols)
IPC(8): H01L 33/00 (2010.01)
USPC: 257/98; 313/502

Documentation searched other than minimum documentation to the extent that such documents are included in the fields searched
IPC(8): H01L 33/00 (2010.01) (text search - see terms below)
USPC: 313/502, 503, 506; 257/89, 98, 99; 315/32, 50, 112, 117, 118 (text search - see terms below)

Electronic data base consulted during the international search (name of data base and, where practicable, search terms used)
PubWEST(USPT,PGPB,EPAB,JPAB); Google Patents, Google Scholar Search terms: white, LED, light emitting diode, red, blue, nm phosphor, temperature, compensation, CRI, color, rendering index, sensor, thermistor, resistor, substrate, series, NTC, PTC, negative, positive, coefficient, parallel, reference, comparator, drive, voltage

C. DOCUMENTS CONSIDERED TO BE RELEVANT

Category*	Citation of document, with indication, where appropriate, of the relevant passages	Relevant to claim No.
Y	US 7,213,940 B1 (Van de Ven et al.) 08 May 2007 (08.05.2007), Fig 7; col 10, ln 32-36; col 17, ln 8-26; col 18, ln 26-29; col 21, ln 12-37	1-29
Y	US 6,636,003 B2 (Rahm et al.) 21 October 2003 (21.10.2003), Fig 4; col 2, ln 32-67; col 5, ln 22 -25	1-29
Y	US 6,161,910 A (Reisenauer et al.) 19 December 2000 (19.12.2000), Figs 1-5; col 4, ln 3-45; col 5, ln 3 to col 6, ln 4	3, 8, 10, 19-23
Y	US 2007/0171159 A1 (Lee) 26 July 2007 (26.07.2007), Fig 4a; paras [0057], [0062]	15-21, 24-27
Y	US 2009/0091265 A1 (Song et al.) 09 April 2009 (09.04.2009), paras [0017], [0039], [0096]	11-14, 16, 20
Y	US 2008/0246419 A1 (Deurenberg) 09 October 2008 (09.10.2008), Fig 2; paras [0027]-[0030]	23
Y	US 2002/0130786 A1 (Weindorf) 19 September 2002 (19.09.2002), Fig 1; para [0037]	25, 26
Y	US 2006/0103612 A1 (Ozaki) 18 May 2006 (18.05.2006), Fig 8; paras [0074]-[0076]	27
Y	US 2005/0093792 A1 (Yamamoto et al.) 05 May 2005 (05.05.2005), Fig 5; paras [0080], [0094]	26

☐ Further documents are listed in the continuation of Box C. ☐

* Special categories of cited documents:
"A" document defining the general state of the art which is not considered to be of particular relevance
"E" earlier application or patent but published on or after the international filing date
"L" document which may throw doubts on priority claim(s) or which is cited to establish the publication date of another citation or other special reason (as specified)
"O" document referring to an oral disclosure, use, exhibition or other means
"P" document published prior to the international filing date but later than the priority date claimed
"T" later document published after the international filing date or priority date and not in conflict with the application but cited to understand the principle or theory underlying the invention
"X" document of particular relevance; the claimed invention cannot be considered novel or cannot be considered to involve an inventive step when the document is taken alone
"Y" document of particular relevance; the claimed invention cannot be considered to involve an inventive step when the document is combined with one or more other such documents, such combination being obvious to a person skilled in the art
"&" document member of the same patent family

Date of the actual completion of the international search	Date of mailing of the international search report
10 January 2011 (10.01.2011)	27 JAN 2011
Name and mailing address of the ISA/US Mail Stop PCT, Attn: ISA/US, Commissioner for Patents P.O. Box 1450, Alexandria, Virginia 22313-1450 Facsimile No. 571-273-3201	Authorized officer: Lee W. Young PCT Helpdesk: 571-272-4300 PCT OSP: 571-272-7774