US00D609770S

(12) United States Design Patent

Mulfinger et al.

(10) Patent No.: US D609,770 S

(45) Date of Patent: ** Feb. 9, 2010

(54) **RAIL MOUNTING APPARATUS**

(75) Inventors: **Robert Mulfinger**, York Haven, PA (US); **Michael Narus**, Florham Park, NJ (US); **Anthony Cautero**, Hackettstown, NJ (US)

(73) Assignee: **The United States of America as represented by the Secretary of the Army**, Washington, DC (US)

(**) Term: **14 Years**

(21) Appl. No.: **29/339,508**

(22) Filed: **Jul. 1, 2009**

Related U.S. Application Data

(63) Continuation-in-part of application No. 11/307,638, filed on Feb. 15, 2006.

(51) **LOC (9) Cl.** **22-01**

(52) **U.S. Cl.** **D22/110**

(58) **Field of Classification Search** D22/100, D22/108, 109, 110, 199; 42/11, 113, 116, 42/119, 124, 125, 127, 90, 145, 128, 72, 42/106, 114, 85, 75.02, 71.01; 248/205.1, 248/201

See application file for complete search history.

(56) **References Cited**

U.S. PATENT DOCUMENTS

D235,339 S * 6/1975 Edstrom D22/109
D429,790 S * 8/2000 Plonka D22/110
6,594,938 B2 * 7/2003 Horton 42/127
6,629,381 B1 * 10/2003 Keng 42/124
2002/0162267 A1 * 11/2002 Nelson et al. 42/120
2004/0103577 A1 * 6/2004 Compton 42/85
2004/0255505 A1 * 12/2004 Fitzpatrick 42/72
2008/0072471 A1 * 3/2008 Keng 42/124
2008/0178511 A1 * 7/2008 Storch et al. 42/90
2008/0216380 A1 * 9/2008 Teetzel 42/127

* cited by examiner

Primary Examiner—T. Chase Nelson
Assistant Examiner—Michael A Pratt
(74) *Attorney, Agent, or Firm*—Henry S. Goldfine

(57) **CLAIM**

The ornamental design for a rail mounting apparatus, as shown and described.

DESCRIPTION

The invention described and claimed herein may be manufactured, used and licensed by or for the U.S. Government for U.S. Government purposes.

FIG. **1** is a perspective view of a rail mounting apparatus showing our new design;

FIG. **2** is a front elevation view thereof;

FIG. **3**. Is a back elevation view thereof;

FIG. **4** is a left side elevation view thereof;

FIG. **5** is a top plan view thereof; and,

FIG. **6** is a bottom plan view thereof.

The broken line showing of portions of the rail mounting apparatus and a rail mount for a rifle or machine gun in FIG. **1** is included for the purpose of illustrating environment and forms no part of the claimed design.

1 Claim, 6 Drawing Sheets

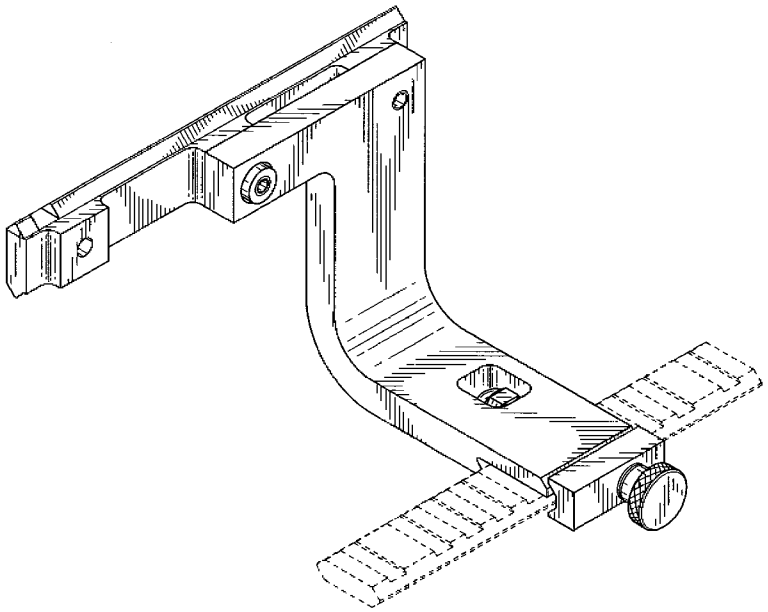

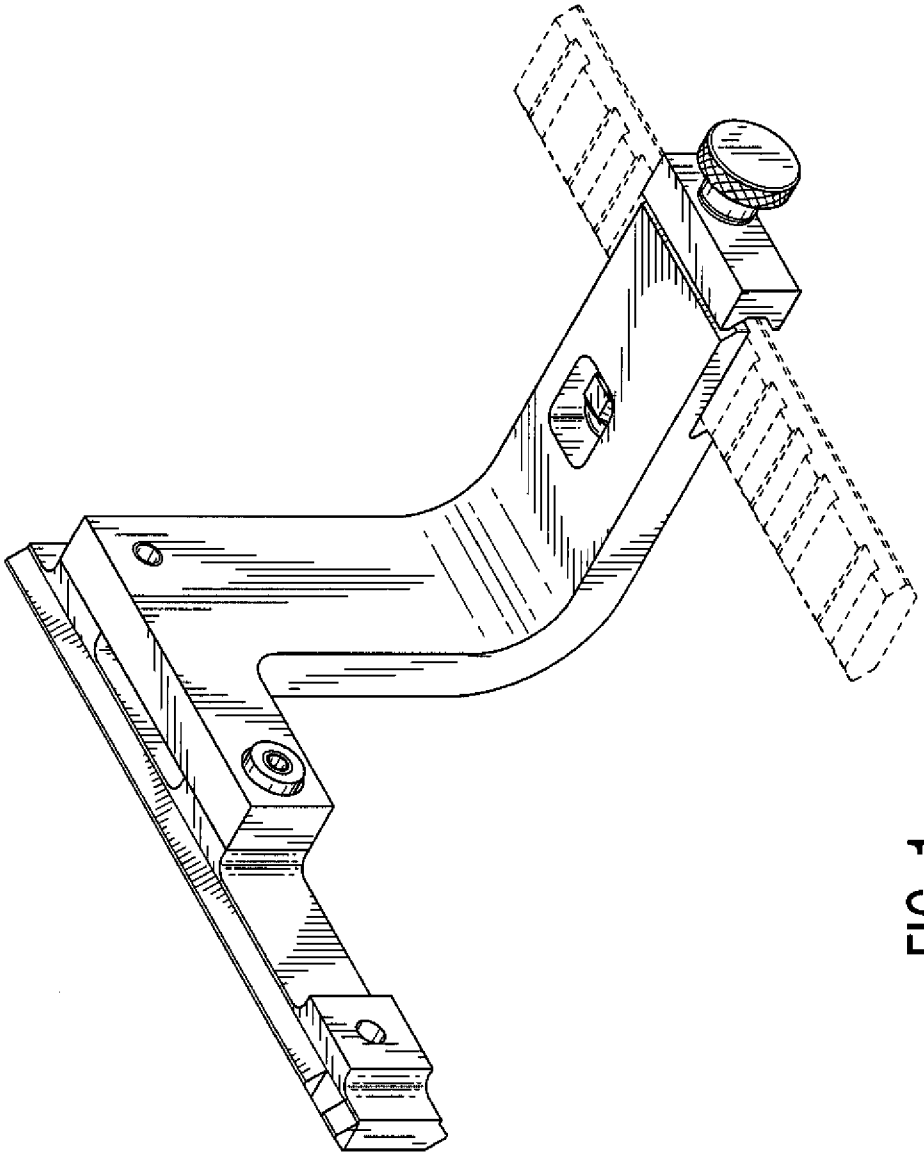

FIG. 1

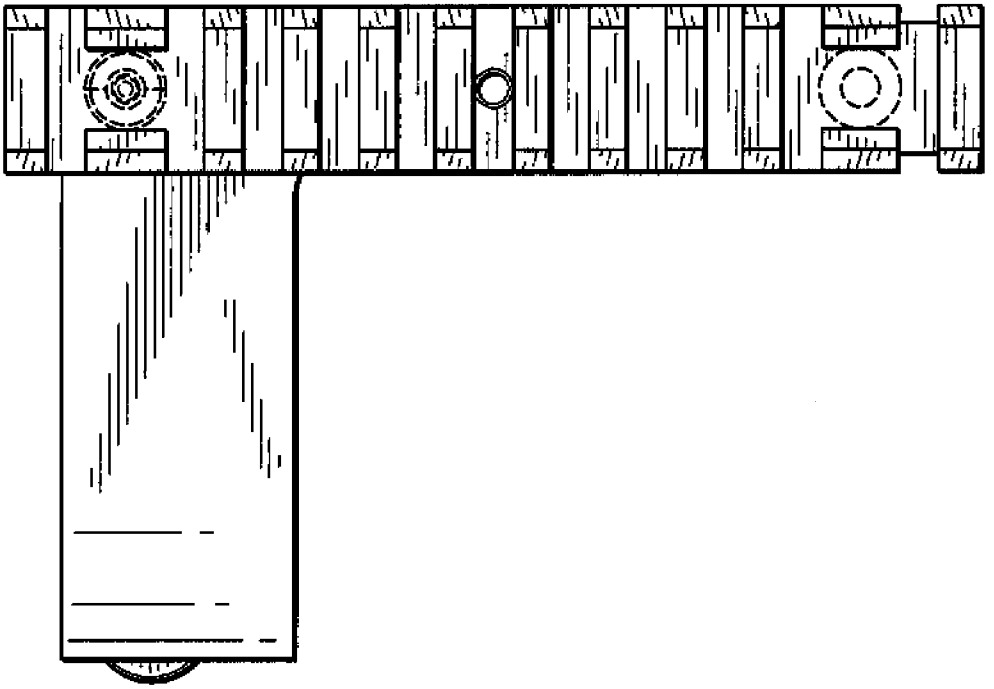

FIG. 2

FIG. 3

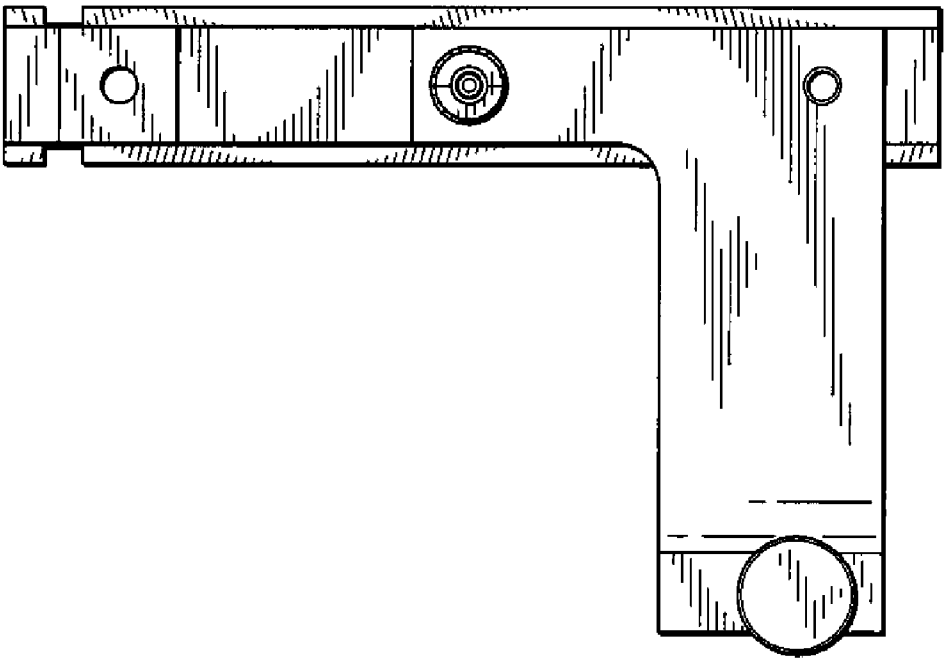

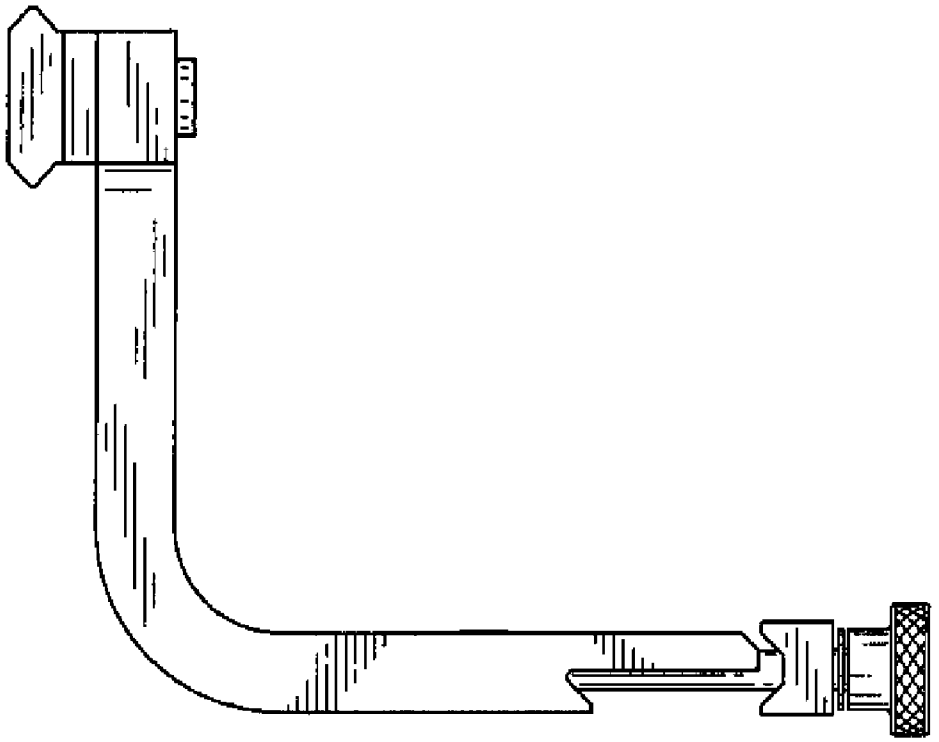

FIG. 4

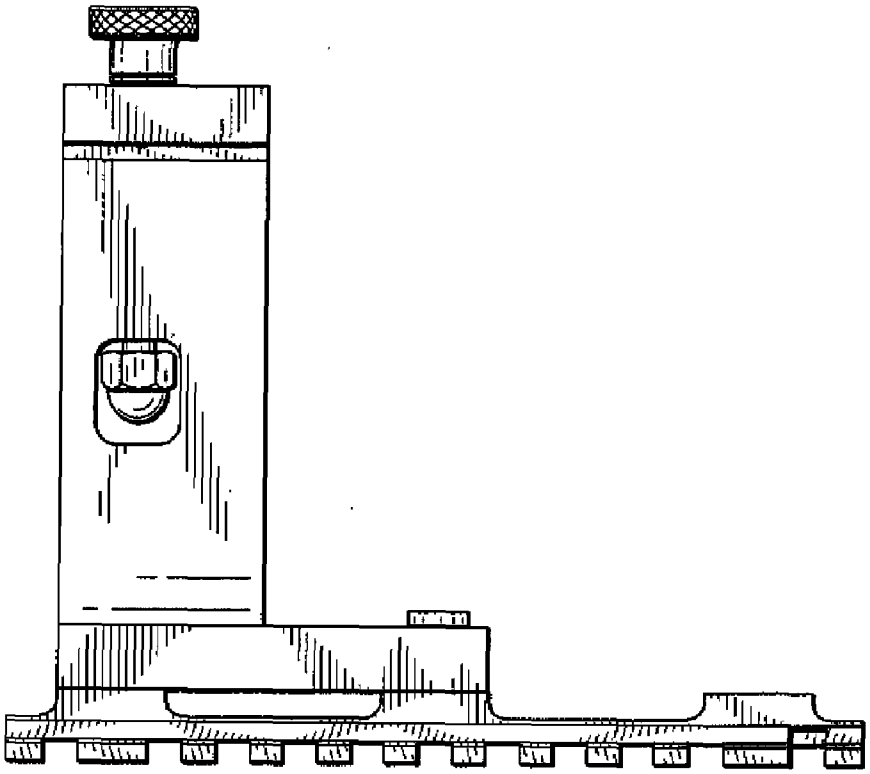

FIG. 5

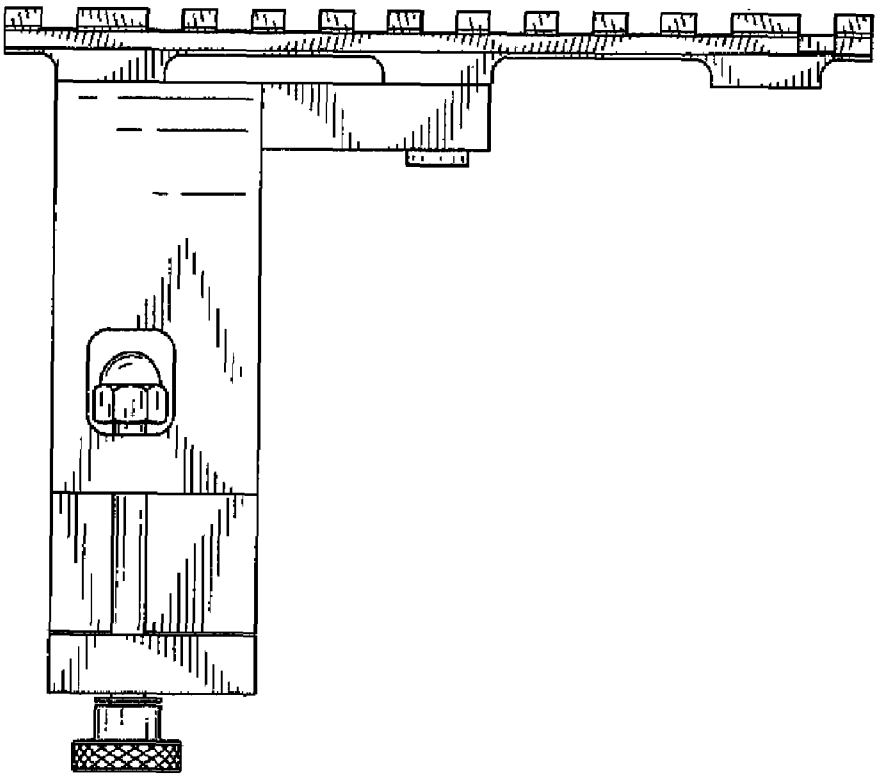

FIG. 6